Bidder: Midwest Fence Corporation **Bidder's E-Mail Address:** ebell@mwfence.com

COOK COUNTY GOVERNMENT
Office of the Chief Procurement Officer

CONTRACT FOR SERVICES
NON-FEDERALLY FUNDED CONTRACT

Contract No. 2557-03184, Purchase Order No. 70000371631

GUARDRAIL AND TRAFFIC BARRIER TERMINALS REPLACEMENT AND REPAIRS
FOR
DEPARTMENT OF TRANSPORTATION AND HIGHWAYS

QUESTIONS:
Any questions regarding this Bid should be submitted via Bonfire.
Questions submission deadline: May 9, 2025 at 12:00 p.m. Local Time - Chicago

BIDS DUE DATE: May 21, 2025 at 10:00 a.m. Local Time - Chicago

BIDS MUST BE UPLOADED TO:
https://cookcountyil.bonfirehub.com/portal/?tab=openOpportunities

LATE BIDS WILL NOT BE CONSIDERED

BUYER CONTACT INFORMATION:
Buyer: Kevin Fair
E-Mail: Kevin.Fair@cookcountyil.gov

Toni Preckwinkle
Cook County Board President

Raffi Sarrafian
Chief Procurement Officer

TABLE OF CONTENTS

Section	Page
Instructions to Bidders …….	IB-1
General Conditions ……	GC-1
Special Conditions …….	SC-1
Specifications ……..	S-1
Site Inspection Certificate ……	SI-1

EXHIBITS:

Exhibit I	Instructions for Submitting an Electronic Bid
Exhibit II	Identification of Subcontractor/Supplier/Subconsultant Form
Exhibit III	Electronic Payables Program Form
Exhibit IV	Preference for Veteran's Business Enterprise and Service-Disabled Veteran's Business Enterprise Form
Exhibit V	Social Enterprise Preference Form
Exhibit VI	Veteran's Workplace Preference Public Works Contracts Form
Exhibit VII	Preference for Businesses Owned by People with Disabilities Form
Exhibit VIII	Board Approval (If Applicable)
Exhibit IX	Minority-Owned Business Enterprise and Women-Owned Business Enterprise Utilization Plan
Exhibit X	Certificate of Insurance
Exhibit XI	Addenda Acknowledgement Form (If Applicable)
Exhibit XII	Bid Page
Exhibit XIII	Economic Disclosure Statement Forms*, including Contract and EDS Signature Pages*

INSTRUCTIONS TO BIDDERS
BID CONTRACTS
INDEX

Section	Subject	Page
IB-01	Definitions	IB-1
IB-02	Preparation of EDS and Execution Document	IB-2
IB-03	Site Inspection Certificate	IB-2
IB-04	Bid Deposit	IB-2/3
IB-05	Exceptions and Addendum	IB-3
IB-06	Bidder Representations and Warranties	IB-3
IB-07	Submission of Bid Proposals	IB-3
IB-08	Bid Proposals to Conform to Contract Documents	IB-3
IB-09	Competency of Bidder	IB-4
IB-10	Local Business Preference	IB-4
IB-11	Re-Entry Employment Earned Credits	IB-4
IB-12	Eligible Veterans Bid Preference for Public Works Contract	IB-4
IB-13	Eligible Bid Preference for VBEs and SDVBEs	IB-4
IB-14	Eligible Bid Preference for Businesses Owned by People with Disabilities	IB-4
IB-15	Public Works	IB-5
IB-16	Consideration of Bid Proposals	IB-5
IB-17	Withdrawal of Bid Proposals	IB-5
IB-18	Notice of Award	IB-5
IB-19	Bid Disputes	IB-6
IB-20	Performance and Payment Bond	IB-6
IB-21	Prices Firm	IB-6
IB-22	Cash Billing Discounts	IB-6
IB-23	Catalogs	IB-6
IB-24	Authorized Dealer/Distributor	IB-6
IB-25	Trade Names	IB-7
IB-26	Samples	IB-7

INSTRUCTIONS TO BIDDERS
BID CONTRACTS
INDEX (continued)

IB-27	Notices	IB-7
IB-28	Compliance with Laws - Public Contracts	IB-7
IB-29	Cooperation with Inspector General	IB-7
IB-30	Credit Card Payments	IB-8
IB-31	Minority and Women Owned Business Enterprise Ordinance	IB-8
IB-32	Cook County Recycled Product Procurement Policy	IB-8
IB-33	Estimated Quantities	IB-8
IB-34	Coalition of Unionized Public Employees	IB-8

INSTRUCTIONS TO BIDDERS

IB-01 DEFINITIONS

A. **BIDDER** shall mean any Person who submits a Bid.

B. **BID COVER PAGE** shall mean the general description of the required services, goods, equipment, or supplies, the contact information of the assigned Contract Negotiator or Specification Engineer in the Office of the Chief Procurement Officer, and shall include the date and time for the submission of Bid Proposals.

C. **BID or BID PROPOSAL** shall mean a response to the Bid Notice containing all Bid Documents and any other documents or information the Bidder is required to provide.

D. **BID DOCUMENTS** means the documents, specifications, forms and other information necessary and required for a Bid.

E. **BID NOTICE** means the notice from the CPO regarding a Procurement which shall include: a general description of the Procurement; information necessary to obtain the Bid Documents; and the date, time and process for the submission of Bids.

F. **CONTRACT** shall mean any written document to make Procurements by or on behalf of Cook County.

G. **CONTRACT DOCUMENTS** shall mean collectively the Bid Cover Page, legal advertisement, Bid Notice, Bid Documents, Bid, Economic Disclosure Statement, MBE/WBE Utilization Plan and any other document required by the Chief Procurement Officer. The above documents shall be considered as one integrated document setting forth the obligations of the parties.

H. **CONTRACTOR** shall mean the Person that enters into a Contract with the County.

I. **COUNTY** shall mean the County of Cook, a body politic and corporate of the State of Illinois.

J. **DIRECTOR** shall mean the person or persons authorized by the County to act in connection with this Contract. Such authorization shall not include any power to change the scope of the Contract or to obligate the County to pay additional sums beyond the amount of the Contract awarded by the Cook County Board of Commissioners or the Chief Procurement Officer.

K. **CHIEF PROCUREMENT OFFICER or CPO** shall mean the Chief Procurement Officer of the County of Cook whose duties and responsibilities are more particularly described in the Cook County Procurement Code, Chapter 34, Article IV, Division I.

L. **OCPO** shall mean the Office of the Chief Procurement Officer of Cook County.

M. **PERSON** shall mean any individual, corporation, partnership, Joint Venture, trust association, Limited Liability Company, sole proprietorship or legal entity.

N. **PROCUREMENT** shall mean obtaining supplies, equipment, goods or services of any kind.

O. **SPECIFICATIONS** shall mean the description of the services, work, goods, equipment, personnel, volume and use statistics and all requirements for the scope of work set forth in the Contract Documents.

P. **USING AGENCY** shall mean the departments or agencies within Cook County government including elected officials.

IB-02 PREPARATION OF EDS AND EXECUTION DOCUMENT

A. The Bidder shall prepare one (1) copy of its Bid Proposal on the proposal forms within the Contract Documents and one (1) Economic Disclosure Statement and Execution Documents (“EDS”), all with original signatures. Unless otherwise stated, all blank spaces on the proposal forms shall be fully completed. Bidder bears all responsibility for error or omissions in the submission of the Bid Proposal. Bid Proposals and EDS which are not properly signed may be rejected.

B. If the Bidder is a corporation, the President and Secretary must execute the EDS. In the event that this Bid Proposal is executed by someone other than the President, attach hereto a certified copy of that section of the Corporate By-Laws, resolution or other authorization by the Corporation, satisfactory to the County that permits

the person to execute Bid Proposal for said corporation. If the corporation is not incorporated in the State of Illinois, a copy of the Certificate of Good Standing from the state of incorporation must be submitted with the EDS.

C. If the Bidder is a partnership or joint venture, all partners or joint venturers must execute the EDS, unless one partner or joint venture has been authorized to sign for the partnership or joint venture, in which case, the partnership agreement, resolution or evidence of such authority, satisfactory to the County, must be submitted. If the Bidder is a joint venture, attach a copy of the joint venture agreement.

D. If the Bidder is a member-managed LLC all members must execute the EDS, unless otherwise provided in the operating agreement, resolution or other corporate documents. If the Bidder is a manager-managed LLC, the manager(s) must execute the Bid Proposal. The Bidder must attach either a certified copy of the operating agreement, resolution or other authorization, satisfactory to the County, demonstrating such person has the authority to execute the EDS on behalf of the LLC. If the LLC is not registered in the State of Illinois, a copy of a current Certificate of Good Standing from the state of incorporation must be submitted with the EDS.

E. If the Bidder is a Sole Proprietorship, the sole proprietor must execute the EDS.

F. A “Partnership” “Joint Venture” or “Sole Proprietorship” operating under an Assumed Name must be registered with the Illinois county in which it is located, as provided in 805 ILCS 405 (2012) and documentation evidencing registration must be submitted with the EDS.

IB-03 SITE INSPECTION CERTIFICATE

The Bidder shall inspect the job-site to become familiar with the conditions related to the work or services and the requirements set forth in the Bid Documents. Failure of the Bidder to visit the Site shall not relieve or alter the Bidder’s responsibility for completing the work or services as required by the Contract Documents.

When required as mandatory in the Contract Documents, the Bidder shall visit the job-site and shall carefully examine and become familiar with all conditions which may in any way affect the performance of the Contract and shall submit certification of such inspection along with the Bid Proposal. The dates and conditions of the site inspection are determined by the County. If the Contract Documents provide that inspection of the site is mandatory, a Bidder’s failure to attend all of the required site inspections shall render the Bid Proposal non-responsive.

IB-04 BID DEPOSIT

When required in the Contract Documents, the Bid Proposal shall be accompanied by, cashier's check, certified check, bank draft or surety bond in the amount shown in the legal advertisement or as may be prescribed in these Contract Documents. A certified or cashier's check shall be drawn on a responsible bank doing business in the United States and shall be made payable to the order of the County of Cook. The surety issuing the bond must have a general rating of "A", and shall be a Class VII or higher in the financial size category as defined by Best Company Inc., Moody’s Investor Services, Standard & Poor’s Corporation or similar rating agency. The surety must be licensed by the State of Illinois Department of Insurance and be listed in the current U.S. Treasury Circular 570 when federal funds are being used. Failure to submit the bid deposit shall constitute a non-responsive Bid Proposal and such Bid Proposal shall be rejected.

IB-04 BID DEPOSIT (con’t.)

The Bidder hereby agrees that the bid deposit shall be forfeited to the County as liquidated damages and not as penalty in the event Bidder fails to comply with IB-15 and IB-17, or otherwise fails or refuses to honor the Bid Proposal upon award of the Contract by the County.

The bid deposit of all bidders will be returned, with the exception of the apparent lowest responsive and responsible Bidder, after the County has awarded the Contract. The bid deposit of the lowest responsive and responsible Bidder will be returned after the Contract has been awarded and the Bidder has submitted all insurance documentation and the Performance and Payment Bond, as required by the Contract Documents.

IB-05 EXCEPTIONS AND ADDENDUM

The County will not provide oral answers to questions concerning Bid Documents before or subsequent to the award of a Contract. If an interpretation or clarification of the Bid Document is desired by the Bidder or if the Bidder intends to request a deviation to the Specifications, the Bidder shall submit questions or request for the deviation to the Specifications to the Chief Procurement Officer prior to the date for inquiries set forth in the Special Conditions. The Chief Procurement Officer

will answer questions or requests for deviations to the Specifications by issuing an Addendum which shall be available to all Bidders submitting a Bid Proposal. If no Addendum is issued by the Chief Procurement Officer, then such deviation or exception to the Specification shall be deemed rejected. The Chief Procurement Officer shall reject any Bid containing deviations or exceptions to the Specifications not previously accepted through a written Addendum. Bidder shall acknowledge receipt of each Addendum issued in the provided Addenda Acknowledgement Form. The Bidder's failure to acknowledge in writing any issued addenda may result in the CPO finding the Bid non-responsive and rejecting the Bid. The OCPO shall not allow any Bidder to acknowledge any such addenda, in writing or orally, after the bidding period has closed.

All written requests for clarifications, deviations or exceptions shall be submitted via Bonfire and addressed to the Buyer listed on the Bid Cover Page.

If the apparent lowest Bidder takes exceptions or deviations to the General Conditions, which are submitted with the Bid, the CPO shall reject the Bid as non-responsive in the event that the Chief Procurement Officer, in his or her sole opinion, determines such exceptions or deviations to be material.

IB-06 BIDDER REPRESENTATIONS AND WARRANTIES

The submission of a Bid shall constitute a representation and warranty that: (i) Bidder has carefully and thoroughly reviewed the Contract Documents and has found them complete and free from ambiguities and sufficient to describe the required goods, equipment, supplies or services; (ii) Bidder and all laborers, employees or subcontractors it intends to use in the performance of this Contract are skilled and experienced in the type of work or services called for by the Contract Documents; and (iii) neither the Bidder nor any of its employees, agents, suppliers or subcontractors have relied on any verbal representations from the County, or any of the County's employees, agents, or consultants, in preparing the Bid.

IB-07 SUBMISSION OF BID PROPOSALS

All Bidders shall submit Bids to the OCPO electronically as per the instructions in Exhibit I Instructions for Submitting an Electronic Bid. OCPO will not accept hardcopy Bids. Bidders are instructed not to send Bids via US Mail or any other carrier service.

IB-08 BID PROPOSALS TO CONFORM TO BID DOCUMENTS

The County will not entertain or consider any Bids: (i) received after the exact time specified in the Bid; (ii) not accompanied by the required bid deposit; or (iii) in any other way failing to comply fully with the conditions stated in the Bid.

IB-09 COMPETENCY OF BIDDER

No Contract shall be awarded to a Bidder that is in arrears or is in default to the County upon any debt or Contract, or that is a defaulter, as surety or otherwise upon any obligation to said County, or has failed to perform faithfully any previous contract with the County.

IB-10 LOCAL BUSINESS PREFERENCE

The Chief Procurement Officer shall, for all Procurements funded solely with County dollars by competitive sealed bidding, accept the lowest bid price or lowest evaluated bid price from a responsive or responsible local business, provided that the Bid does not exceed the lowest bid price or lowest evaluated bid price from a responsive and responsible non-local business by more than five percent (5%).
"Local business" shall mean a Person, including a foreign corporation authorized to transact business in Illinois, having a bona fide establishment located within the County at which it is transacting business on the date when a Bid is submitted to the County, and which employs the majority of its regular, full-time work force within the County. A Joint Venture shall constitute a Local Business if one or more Persons that qualify as a "Local Business" hold interests totaling over 50 percent in the Joint Venture, even if the Joint Venture does not, at the time of the Bid submittal, have such a bona fide establishment within the County.

IB-11 RE-ENTRY EMPLOYMENT EARNED CREDITS

In accordance with Section 34-231 through Section 34-235 of the Cook County Procurement Code, for all Public Works Contracts, with an estimated Bid Price of $100,000 or more, the Bidder shall be permitted but is not required, to submit an employment plan of Former Offenders with its Bid Proposal in order to receive an earned credit for future Public Works Contracts. The Employment Plan shall be approved by the CPO and, if required, the Cook County Re-entry Employment Committee. Upon the completion of a qualifying contract and the Bidder presenting satisfactory information and documentation to the CPO, the CPO shall provide the Bidder with an Earned Credit Certificate, which shall be valid for

three years from the date of issuance. The Bidder shall receive an earned credit of ½% of the Bid Price for future Public Works Contracts, if 5-10% of the percentage of Total Labor Hours are performed by Former Offenders, and an earned credit of 1% of the Bid Price for future Public Works Contracts, if the more than 10% of the percentage of Total Labor Hours are performed by Former Offenders. For purposes of this provision, "Former Offenders" shall mean adults who are residents of the County and who have been convicted of a crime. "Labor hours" shall mean the total hours of workers receiving an hourly Wage who are directly employed at the work site. It shall include hours performed by workers employed by the contractor and all subcontractors working at the site. "Labor hours" shall not include hours worked by nonworking former, superintendents, owners and workers who are not subject to prevailing wage requirements.

IB-12 ELIGIBLE VETERANS BID PREFERENCE FOR PUBLIC WORKS CONTRACT

In accordance with Section 34-236 (a) of the Cook County Procurement Code, for all Public Works Contracts, the CPO shall give a preference of one percent of the amount of the Contract to a Responsible and Responsive Bidder for a Public Works Contract when such Bidder has committed by affidavit to utilize Eligible Veterans for at least five percent of the hours worked under such Contract. Failure to utilize Eligible Veterans in accordance with the affidavit will result in breach of Contract.

IB-13 ELIGIBLE BID PREFERENCE FOR VBEs and SDVBEs

In accordance with Section 34-236 (b) of the Cook County Procurement Code, the CPO shall give a preference of five percent of the amount of the Contract to a Responsible and Responsive Veteran owned Business Enterprises ("VBEs") or Service Disabled Veteran owned Business Enterprises ("SDVBE") certified by the Contract Compliance Director ("CCD"), or by any other entity approved by the CCD.

IB-14 ELIGIBLE BID PREFERENCE FOR BUSINESSES OWNED BY PEOPLE WITH DISABILITIES

In accordance with Section 34-242 (a) of the Cook County Procurement Code, the CPO shall recommend award to the lowest Responsible and Responsive Bidder who is a PDBE, provided that the Bid of such bidder does not exceed the Bid of the lowest Responsible and Responsive Bidder by more than five percent (5%).

IB-15 PUBLIC WORKS

For all Public Works Projects, the Bidder shall comply with Section 34-190 of the Cook County Procurement Code, which requires that Public Works Contracts having an estimated contract price of $100,000 or more, where not otherwise prohibited by Federal or State law, shall have at least 50 percent of the total hours worked on the site by employees of the Contractor and subcontractors shall be performed by residents of the County.

All Bid Proposals for Public Works Construction shall be evaluated to determine, whether the Bidder is responsible, in accordance with Section 34-145 of the Cook County Procurement Code. In accordance with Section 34-145 the CPO shall determine whether the Bidder: (i) is authorized to do business in Illinois and the County; (ii) has, as applicable, a Federal Employer Identification Number or Social Security; (iii) meets any applicable insurance requirements in the Bid Document; (iv) has certified that it is in compliance with all provisions of the Illinois Prevailing Wage Act, and State and Federal equal employment opportunity laws; (v) has certified that it participates in active apprenticeship and training programs approved and registered with the United States Department of Labor Bureau of Apprenticeship and Training for each of the trades of work contemplated under the awarded Contract; (vi) contractually requires any subcontractor to participate in active apprenticeship and training programs approved and registered with the United States Department of Labor Bureau of Apprenticeship and Training for each of the trades of work contemplated under the awarded Contract; and (vii) has agreed to provide Certified payrolls as specified in the Illinois Prevailing Wage Act.

IB-16 CONSIDERATION OF BID PROPOSALS

The County reserves the right to reject or accept any or all Bid Proposals, to extend the bidding period, to waive technicalities in the Bid and/or to withdraw or cancel the Bid or to issue a new Bid, i.e., "rebid" prior to award of the Contract.

No physical public bid opening shall be held. A preliminary record of all bids received will be posted to the OCPO website and shall be made available immediately after the bids are opened.

After the bidding period has closed, the Bid Proposals will be evaluated based on the price, conformance with Specifications, the responsibility of the various Bidders taking into consideration factors including, but not limited to, those noted in IB-09, IB-10 and responsiveness to the County's Minority and Women Owned Business Ordinance.
The Chief Procurement Officer reserves the right to make corrections, after receiving the Bids, to any clerical error apparent on the face of the Bid, including but not limited to obviously incorrect units or misplaced decimal points, or arithmetic errors.

In the event that comparison of the Bidder's "Unit Price" and "Total Price" submitted for any line items reveals a calculation error, the Unit Price will prevail.

The Chief Procurement Officer reserves the right to reject any Bid that, in his or her discretion and authority is deemed materially unbalanced.

IB-17 WITHDRAWAL OF BID PROPOSALS

Bidders may withdraw their Bid Proposals at any time prior to the time specified in the Bid as the date and hour set for the Bid Due Date. However, no Bidder shall withdraw, cancel or modify its Bid Proposal for a period of ninety (90) calendar days after the Bid Due Date.

IB-18 NOTICE OF AWARD

The Chief Procurement Officer shall notify the successful Bidder, in writing, of award of the Contract by the County within ninety (90) days from the Bid Opening date. Upon receipt of the Notice of Award, the Contractor shall promptly secure, execute and deliver to the Chief Procurement Officer any documents required herein.

IB-19 BID DISPUTES

Section 34-136 of the Cook County Procurement Code permits Bidders to file protests. Any Bidder who reasonably believes that the recommended Bidder is not the lowest Responsive and Responsible Bidder, or has a complaint about the bid process, may submit a bid protest, in writing, and directed to the CPO, within three business days after the date upon which the CPO posts the recommended Bid for award or execution on the County's website. The bid protest must specify why the protester believes the recommended Bidder is not the lowest Responsive and Responsible Bidder, or why the protestor believes the bid procedure was unfair, including a statement of how the alleged unfairness prejudiced the protesting Bidder and the action requested of the CPO. A bid protest based on an issue which could have been clarified through a request for clarification or information pursuant to Section 34-136(d), and IB-05, Communications with the County regarding competitive bidding process, will not be considered if the protesting Bidder failed to make such request. When a bid protest has been submitted, no further action shall be taken on the Procurement until the CPO makes a decision concerning the bid protest, unless the Using Agency responds in writing and sufficiently demonstrates that (i) the item to be procured is urgently required and (ii) failure to make the award promptly will unduly delay delivery or performance or cause other undue harm.

The CPO shall issue a written decision on the bid protest to the protesting Bidder and to any other Bidder affected by such decision as soon as reasonably practicable. If the bid protest is upheld based on a lack of fairness in the bid procedure, the CPO shall re-bid the procurement. If the CPO determines that the recommended Bidder was not Responsive and Responsible, that Bidder shall be disqualified and the CPO may either recommend the lowest Responsive and Responsible Bidder or re-bid. Any CPO decision concerning bid protests shall be final.

IB-20 PERFORMANCE AND PAYMENT BOND

When required in Bid Documents, the successful Bidder shall furnish a Performance and Payment Bond in the full amount of the Contract on the County Form, a specimen of which shall be provided. The Surety issuing the Performance and Payment Bond must have a general rating of "A" and shall be a Class VII or higher in the financial size category as defined by Best's Key Rating Guide-Property and Casualty, or have such ratings as specified in the Contract Documents.

In the event that the Bidder fails to furnish the Performance and Payment Bond within fourteen (14) calendar days after service of the Notice of Award, the County may elect to retain Bidder's bid deposit as liquidated damages and not as a penalty and reject the Bid. The parties agree that the sum of the bid deposit is a fair estimate of the amount of damages that the County will sustain due to the Bidder's failure to furnish the Performance and Payment Bond and the termination of the Contract.

IB-21 PRICES FIRM

All prices quoted in the Bid Proposal shall be firm and will not be subject to increase during the term of the Contract, except as otherwise provided in these Contract Documents.

IB-22 CASH BILLING DISCOUNTS

Cash billing or percentage discounts for payment will not be considered in evaluating Bid Proposals.

IB-23 CATALOGS

Each Bidder shall submit, where necessary or when requested catalogs, descriptive literature, and detailed drawings, fully detailing features, designs, construction, appointment and finishes not covered in the Specifications but necessary to fully describe the goods, equipment, supplies or services.

IB-24 AUTHORIZED DEALER/DISTRIBUTOR

For goods, equipment and supplies, the Bidder must be one of the following: (i) the manufacturer; (ii) an authorized dealer/distributor; or (iii) able to promptly secure the necessary genuine parts, assemblies and/or accessories as supplied by the original equipment manufacturer (O.E.M.), along with any necessary schematics or drawings to fulfill the contractual obligations. With respect to the purchase of vehicles, or services related to vehicles, the Specifications or Special Conditions may require that the Bidder be an authorized dealership of the manufacturer. The Bidder must be able to furnish original product warranty and manufacturer's related services such as product information, product re-call notices, etc. Proof of ability to transfer product warranty to the County is to be submitted with the Bid Proposal.

IB-25 TRADE NAMES

In cases where an item is identified by a manufacturer's name, brand name, trade name, catalog number, or reference, it is understood that the Bidder proposes to furnish the item identified and does not propose to furnish an alternate but equivalent item, unless the Bidder has proposed and the County has accepted the alternate but equivalent item.

Unless the Bid states that no substitute shall be allowed, the reference to a manufacturer’s name, brand name, trade name, catalog number, or reference is intended to be descriptive and not restrictive and to indicate to prospective Bidders articles that shall be satisfactory. Bid Proposals for other manufacturer names, brand names, trade names, catalog numbers or references shall be considered, provided each Bidder states on the face of the Bid Proposal what alternate, but equivalent items are being proposed.

If the Bidder proposes alternate, but equivalent, items, the Bidder must provide the following: (i) product identification, including manufacturer’s name and address; (ii) manufacturer’s literature identifying the product description, reference standards and performance and test data; (iii) samples, as applicable; and (iv) itemized comparisons of the proposed alternate items listing significant variations. If a Bidder proposes alternate items, it warrants and represents that in making a formal request for substitution that: (i) the proposed alternate item is equivalent to or superior in all respects to the item specified in the Bid; and (ii) that the same warranties and guarantees will be provided for the proposed alternate items as those specified in the Bid. The CPO may, in his or her sole discretion accept an alternate item for a specified item, provided the alternate items so bid is, in the CPO’s sole opinion the equivalent of the item specified in the Bid. An alternate item that the CPO determines not to be equivalent to the specified item shall render the bid non-responsive and the CPO shall reject the Bid.

IB-26 SAMPLES

Bidders may be asked upon request of the Chief Procurement Officer, including subsequent to the Bid Due Date, to furnish and deliver a representative sample sufficient to effectively evaluate each item listed in the Bid Proposal. All samples must be delivered F.O.B. DESTINATION, FREIGHT PREPAID to an identified delivery location within five (5) business days of the request. Samples submitted must be identical to those specified in the Bid Proposal. Submission of other than the samples reflected in the Bid Proposal or failure to furnish samples within the required time period shall be cause for rejection of the Bid Proposal. All samples are subject to mutilation and will not be returned. Bidders shall bear the cost of any samples and shipping or delivery costs related thereto.

IB-27 NOTICES

All communications and notices between the County and Bidders regarding the Bid Documents shall be in writing, sent to the contact person listed on the cover of this bid solicitation via e-mail. Notices to the Bidders shall be addressed to the name and email address provided by the Bidders; notices to the Chief Procurement Officer shall be addressed to the Chief Procurement Officer and the contact person listed on the cover of this bid solicitation.

IB-28 COMPLIANCE WITH LAWS - PUBLIC CONTRACTS

This is a competitive Bid of Cook County government subject to laws and ordinances governing public bids and contracts. The Bidder shall at all times observe and comply with all laws, ordinances, regulations and codes of the Federal, State, County and other local government agencies which may in any manner effect the preparation of the Bid Proposal or the performance of the Contract. If the Bidder observes that any of the Bid Documents are at variance with

any laws, ordinances, regulations or codes, it shall promptly notify the Chief Procurement Officer in writing and if necessary an addendum shall be issued by the Chief Procurement Officer.

IB-29 COOPERATION WITH INSPECTOR GENERAL

Persons or businesses seeking County contracts are required to abide by all of the applicable provisions of the Office of the Independent Inspector General Ordinance (Section 2-281 et. seq. of the Cook County Code of Ordinances). Failure to cooperate as required may result in monetary and/or other penalties.

IB- 30 CREDIT CARD PAYMENTS

The County has implemented a Prompt Payment Program (the "E-Payables Program"). Bidders who voluntarily participate in the Program will receive prompt payments via the County's Visa Purchasing Card. In order to participate in the Program, Bidders must submit the E=Payables Enrollment Form to the Cook County Comptroller's Office. A description of the Program is attached for informational purposes. Notwithstanding the foregoing, the County has no duty or obligation to process prompt payments to Bidders. The County reserves its right to discontinue the Program at any time. The County will not provide a bid incentive or preference to Bidders who participate in the Program.

IB-31 MINORITY AND WOMEN OWNED BUSINESS ENTERPRISE ORDINANCE

Cook County has adopted the Minority and Women Owned Business Enterprise Ordinance (the "Ordinance"). The Ordinance establishes annual participation goals for Minority and Women Owned Business Enterprises. The requirements of the Ordinance, as well as the documents the Bidder must submit are set forth in GC-19. The Bidder's failure to submit the MBE/WBE Utilization Plan, as more fully described in GC-19 shall render the Bid non-responsive.

IB-32 COOK COUNTY RECYCLED PRODUCT PROCUREMENT POLICY

Cook County has adopted the Cook County Recycled Product Procurement Policy. In accordance with the Policy, Cook County encourages the use of recycled paper and paper products, whenever practicable. The Bidder shall use recycled paper, except where the specialized nature of certain materials (such as photographs) requires otherwise, and all documents shall be printed two-sided unless two-sided printing is not practicable.

IB-33 ESTIMATED QUANTITIES

Unless expressly stated in the Specifications, Special Conditions, or Proposal page(s) any quantities stated in this Bid represent estimated usage and as such are for bid canvassing purposes only. The County reserves the right to increase or decrease quantities ordered. Nothing herein will be construed as an intent or obligation on the part of the County to purchase any goods, equipment, supplies or services beyond those determined by the County to be necessary to meet its needs.

IB-34 COALITION OF UNIONIZED PUBLIC EMPLOYEES

The Cook County Board of Commissioners has entered into an Agreement with the Coalition of Unionized Public Employees ("COUPE"). To the extent permitted by law, in the event the County either directly or indirectly through a contractor or construction manager, undertakes construction work within the trade jurisdiction of a member of COUPE, each affected coalition union shall receive fourteen (14) days written notice prior to the County's undertaking, except in the case of emergency, the County shall perform or require the performance of such work by a person, firm, or company signatory or willing to become signatory for purposes of that County project to an existing labor agreement with the coalition union or a union with the appropriate trade jurisdiction located in County of Cook.

END OF SECTION

GENERAL CONDITIONS

GENERAL CONDITIONS
BID CONTRACTS
INDEX

Section	Subject	Page
GC-01	Subcontracting or Assignment of Contract or Contract Funds	GC-1
GC-02	Indemnification	GC-1
GC-03	Inspection and Responsibility	GC-1
GC-04	Payment to Contractors and Subcontractors	GC-1/2
GC-05	Prepaid Fees	GC-2
GC-06	Taxes	GC-2
GC-07	Price Reduction	GC-2
GC-08	Contractor Credits	GC-2
GC-09	Disputes	GC-2
GC-10	Contract Amendments	GC-3
GC-11	Default	GC-3
GC-12	County's Remedies	GC-3
GC-13	Contractor's Remedies	GC-4
GC-14	Delays	GC-4
GC-15	Insurance Requirements	GC-4/5
GC-16	Patents, Copyrights and Licenses	GC-5
GC-17	Compliance with Laws	GC-6
GC-18	Delivery	GC-6
GC-19	MBE/WBE Cook County Ordinance	GC-6/10
GC-20	Material Safety Data Sheet	GC-10
GC-21	Conduct of the Contractor	GC-10
GC-22	Accident Reports	GC-10
GC-23	Use of Premises	GC-10
GC-24	General Notice	GC-11

GENERAL CONDITIONS
BID CONTRACTS
INDEX

Section	Subject	Page
GC-25	Termination for Convenience	GC-11
GC-26	Guarantees and Warranties	GC-11
GC-27	Standard of Contract Goods, Equipment or Supplies	GC-11
GC-28	Confidentiality and Ownership of Documents	GC-11/12
GC-29	Quantities	GC-12
GC-30	Audit; Examination of Records	GC-12
GC-31	Governing Law	GC-12
GC-32	Cooperation with Inspector General	GC-12
GC-33	Waiver	GC-12
GC-34	Entire Agreement	GC-13
GC-35	Force Majeure	GC-13
GC-36	Governmental Joint Purchasing Agreement	GC-13
GC-37	Comparable Government Procurement	GC-13
GC-38	Federal Clauses	GC-13/22
GC-39	Contract Interpretation	GC-23

GENERAL CONDITIONS

GC-01 SUBCONTRACTING OR ASSIGNMENT OF CONTRACT OR CONTRACT FUNDS

Once awarded, this Contract shall not be subcontracted or any part thereof assigned without the express written approval of the County Chief Procurement Officer ("Chief Procurement Officer"). In no case, however, shall such approval relieve the Contractor from his obligations or change the terms of the Contract. The Contractor shall not transfer or assign any Contract funds or claims due or to become due without the advance written approval of the Chief Procurement Officer. The unauthorized subcontracting or assignment of the Contract, in whole or in part, or the unauthorized transfer or assignment of any Contract funds, either in whole or in part, or any interest therein, which shall be due or are to become due the Contractor shall have no effect on the County and are null and void.

The Contractor shall identify any and all contractors and subcontractors it intends to use in the performance of the Contract by completing the Identification of Subcontractor/Supplier/Subconsultant Form ("ISF"). All such persons shall be subject to the prior approval of the County. The Contractor will only subcontract with competent and responsible Subcontractors. The Chief Procurement Officer may require in his or her sole discretion, that the Contractor provide copies of all contracts with subcontractors.

The Contractor and its employees, contractors, subcontractors, agents and representatives are, for all purposes arising out of this Contract, independent contractors and are not employees of the County. It is expressly understood and agreed that the Contractor and its employees, contractors, subcontractors, agents and representatives shall in no event as a result of a contract be entitled to any benefit to which County employees are entitled, including, but not limited to, overtime, retirement benefits, worker's compensation benefits and injury leave or other leave benefits.

GC-02 INDEMNIFICATION

The Contractor covenants and agrees to indemnify and save harmless the County and its commissioners, officials, employees, agents and representatives, and their respective heirs, successors and assigns, from and against any and all costs, expenses, attorney's fees, losses, damages and liabilities incurred or suffered directly or indirectly from or attributable to any claims arising out of or incident to the performance or nonperformance of the Contract by the Contractor, or the acts or omissions of the officers, agents, employees, contractors, subcontractors, licensees or invitees of the Contractor. The Contractor expressly understands and agrees that any Performance Bond or insurance protection required of the Contractor, or otherwise provided by the Contractor, shall in no way limit the responsibility to indemnify the County as hereinabove provided.

GC-03 INSPECTION AND RESPONSIBILITY

The County shall have a right to inspect and approve any Contract goods, equipment, supplies or services used in carrying out this Contract and shall approve the quality and standards of all materials or completed work furnished under this Contract. Contract goods, equipment, supplies or services not complying herewith may be rejected by the Chief Procurement Officer and/or the Director and shall be replaced and/or re-performed by the Contractor at no cost to the County. Any Contract goods, equipment or supplies rejected shall be removed within a reasonable time from the premises of the County at the entire expense of the Contractor, after notice has been given by the County to the Contractor that such Contract goods, equipment or supplies have been rejected.

GC-04 PAYMENT TO CONTRACTORS AND SUBCONTRACTORS

All invoices submitted by the Contractor shall be in accordance with the cost provisions contained in the Contract Documents and shall contain a detailed description of the Deliverables (i.e., the goods, equipment, supplies or services) including the quantity of the Deliverables, for which payment is requested. All invoices for services shall include itemized entries indicating the date or time period in which the services were provided, the amount of time spent performing the services, and a detailed description of the services provided during the period of the invoice. All Contracts for services that are procured as Sole Source must also contain a provision requiring the Contractor to submit itemized records indicating the dates that services were provided, a detailed description of the work performed on each such date, and the amount of time spent performing work on each such date. All invoices shall reflect the amounts invoiced by and the amounts paid to the Contractor as of the date of the invoice. Invoices for new charges shall not include "past due" amounts, if any, which amounts must be set forth on a separate invoice. Contractor shall not be entitled to invoice the County for any late fees or other penalties.

In accordance with Section 34-177 of the Cook County Procurement Code, the County shall have a right to set off and subtract from any invoice(s) or Contract price, a sum equal to any fines and penalties, including interest, for any tax or fee delinquency and any debt or obligation owed by the Contractor to the County.

GC-04 PAYMENT TO CONTRACTORS AND SUBCONTRACTORS (con't.)

The Contractor acknowledges its duty to ensure the accuracy of all invoices submitted to the County for payment. By submitting the invoices, the Contractor certifies that all itemized entries set forth in the invoices are true and correct. The Contractor acknowledges that by submitting the invoices, it certifies that it has delivered the Deliverables, i.e., the goods, supplies or equipment set forth in the Contract to the Using Agency, or that it has properly performed the services set forth in the Contract. The invoice must also reflect the dates and amount of time expended in the provision of services under the Contract. The Contractor acknowledges that any inaccurate statements or negligent or intentional misrepresentations in the invoices shall result in the County exercising all remedies available to it in law and equity including, but not limited to, a delay in payment or non-payment to the Contractor, and reporting the matter to the Cook County Office of the Independent Inspector General.

When a Contractor receives any payment from the County for any supplies, equipment, goods, or services, it has provided to the County pursuant to its Contract, the Contractor must make payment to its subcontractors within 15 days after receipt of payment from the County, provided that such subcontractor has satisfactorily provided the supplies, equipment, goods or services in accordance with the Contract and provided the Contractor with all of the documents and information required of the Contractor. The Contractor may delay or postpone payment to a subcontractor when the subcontractor's supplies, equipment, goods, or services do not comply with the requirements of the Contract, the Contractor is acting in good faith, and not in retaliation for a subcontractor exercising legal or contractual rights.

GC-05 PREPAID FEES

In the event this Contract is terminated by either party, for cause or otherwise, and the County has prepaid for any goods, equipment, supplies or services to be provided pursuant to this Contract, Contractor shall refund to the County, on a prorated basis to the effective date of termination, all amounts prepaid for such goods, equipment, supplies or services not actually provided as a result of the termination. The refund shall be made within fourteen (14) days of the effective date of termination.

GC-06 TAXES

Federal Excise Tax does not apply to materials purchased by the County by virtue of Exemption Certificate No. 36-75-0038K. Illinois Retailers' Occupation Tax, Use Tax and Municipal Retailers' Occupation Tax do not apply to materials or services purchased by the County by virtue of statute. The price or prices quoted herein shall include any and all other federal and/or state, direct and/or indirect taxes which apply to this Contract. The County's State of Illinois Sales Tax Exemption Identification No. is E-9998-2013-07.

GC-07 PRICE REDUCTION

If at any time after the Contract award, Contractor makes a general price reduction in the price of any goods, equipment, supplies or services covered by the Contract, the equivalent price reduction based on similar quantities and/or considerations shall be applied to this Contract for the term of the Contract. Such price reductions shall be effective at the same time and in the same manner as the reduction in the price to customers generally.

GC-08 CONTRACTOR CREDITS

To the extent the Contractor gives credits toward future purchases from its financial incentives, discounts, value points or other benefits based on the purchase of the goods, equipment, supplies or services provided for under this Contract, such credits belong to the County and not any specific Using Agency. Contractor shall report any such credits to the Chief Procurement Officer.

GC-09 DISPUTES

Any dispute arising under the Contract between the County and Contractor shall be decided by the Chief Procurement Officer. The complaining party shall submit a written statement detailing the dispute and specifying the specific relevant Contract provision(s) to the Chief Procurement Officer. Upon request of the Chief Procurement Officer, the party complained against shall respond to the complaint in writing within five days of such request. The Chief Procurement Officer will reduce his decision to writing and mail or otherwise furnish a copy thereof to the Contractor and Director. Dispute resolution as provided herein shall be a condition precedent to any other action at law or in equity. Notwithstanding a dispute, Contractor shall continue to discharge all its obligations, duties and responsibilities set forth in the Contract during any dispute resolution proceeding unless otherwise agreed to by the County in writing.

GC-10 CONTRACT AMENDMENTS

The parties may during the term of the Contract make amendments to the Contract but only as provided in this section. Such amendments shall only be made by mutual agreement in writing.

In the case of Contracts not approved by the Board, the Chief Procurement Officer may amend a contract provided that the total cost of all such amendments does not increase the total amount of the Contract beyond $200,000. Such action may only be made with the advance written approval of the Chief Procurement Officer. If the amendment increases the total award amount beyond $200,000, then Board approval will be required.

No Using Agency or employee thereof has authority to make any amendments to the Contract. Any modifications or amendments to the Contract made without the express written approval of the Chief Procurement Officer is void and unenforceable.

Contractor is hereby notified that, except for amendments which are made in accordance with this GC-10 Modifications and Amendments, no Using Agency or employee thereof has authority to make any modification or amendment to the Contract.

GC-11 DEFAULT

Contractor shall be in default hereunder in the event of a material breach by Contractor of any term or condition of this Contract where Contractor has failed to cure such breach within ten (10) days after written notice of breach is given to Contractor by the County, setting forth the nature of such breach.

A material breach of the contract by the Contractor includes but is not limited to the following:

1. Failure to begin performance under the Contract within the specified time;
2. Failure to perform under the Contract with sufficient personnel, equipment, or materials to ensure completion of said performance within the specified time or failure to assign qualified personnel to ensure completion within the specified time;
3. Performance of the Contract in an unsatisfactory manner;
4. Refusal to perform services deemed to be defective or unsuitable;
5. Discontinuance of performance of Contractor's obligations under the Contract or the impairment or the reasonable progress of performance;
6. Becoming insolvent, being declared bankrupt or committing any act of bankruptcy or insolvency;
7. Any assignment of the Contract for the benefit of creditors;
8. Any cause whatsoever which impairs performance in an acceptable manner; or
9. Any other material breach of any term or condition of the Contract.

County shall be in default hereunder if any material breach of the Contract by the County occurs which is not cured by the County within forty-five (45) days after written notice of breach has been given by Contractor to the County, setting forth the nature of such breach.

GC-12 COUNTY'S REMEDIES

If the Contractor fails to remedy a material breach during the ten (10) day cure period pursuant to General Condition GC-11, Default, the County shall have the right to terminate the Contract provided, however, that the County shall give Contractor prior written notice of its intent to terminate. Following notice of breach to Contractor, the County reserves the right to withhold payments owed to Contractor until such time as Contractor has cured the breach which is the subject matter of the notice. In addition, the County shall have the right to pursue all remedies in law or equity.

GC-13 CONTRACTOR'S REMEDIES

If the County has been notified of breach and fails to remedy the breach during the forty-five (45) day cure period pursuant to General Condition GC-11, Default, the Contractor shall have the right to terminate this Contract providing, however, that Contractor shall give the County thirty (30) days prior written notice of termination.
Contractor shall have the right to pursue all remedies available in law or equity. In all cases the Contractor's damages shall be those provable damages not to exceed the value of the Contract as awarded by the Cook County Board of Commissioners or the Chief Procurement Officer.

GC-14 DELAYS

Contractor agrees that no charges or claims for damages shall be made by Contractor for any delays or hindrances from any cause whatsoever related to the performance of the Contract.

GC-15 INSURANCE REQUIREMENTS

Waiver of Subrogation

All insurance policies shall contain a Waiver of Subrogation Endorsement in favor of Cook County.

Insurance Requirements of the Contractor

No later than the effective date of this Contract, the Contractor, at its cost, shall secure and maintain at all times, unless specified otherwise, until completion of the term of this Contract the insurance specified below.
Nothing contained in these insurance requirements is to be construed as limiting the extent of the Contractor's responsibility for payment of damages resulting from its performance of this Contract. The insurance purchased and maintained by the Contractor shall be primary and not excess or pro rata to any other insurance issued to the County. Contractor shall require all subcontractors to provide the insurance required in this Contract, or Contractor may provide the coverages for the subcontractors. All subcontractors are subject to the same insurance requirements as Contractor except paragraph (d) Excess Liability or unless specified otherwise. The Cook County Department of Risk Management maintains the right to modify, delete, alter or change these requirements.

1. **Coverages**

(a) **Workers Compensation Insurance**
Workers' Compensation shall be in accordance with the laws of the State of Illinois or any other applicable jurisdiction.

The Workers Compensation policy shall also include the following provisions:

Employers' Liability coverage with a limit of:
(1) $1,000,000 each Accident
(2) $1,000,000 each Employee
(3) $1,000,000 Policy Limit for Disease

(b) **Commercial General Liability Insurance**
The Commercial General Liability shall be on an occurrence form basis to cover bodily injury and property damage including loss of use.

The General Liability limits shall not be less than $1,000,000 per occurrence and $2,000,000 aggregate combined single limit for bodily injury and property damage. The General Liability policy shall include, without limitation the following coverages:

(1) All premises and operations;
(2) Contractual Liability;
(3) Products/Completed Operations;
(4) Severability of interest/separation of insureds clause.

(c) **Automobile Liability Insurance**

When any vehicles are used in the performance of the Contract, Contractor shall secure Automobile Liability Insurance to cover all owned, non-owned and hired automobiles, trucks and trailers. The limits of liability shall not be less than the following:

(1) Liability - All Autos: Bodily Injury & Property Damage - $1,000,000 per Occurrence
(2) Uninsured/Motorists: Per Illinois Requirements

(d) **Umbrella/Excess Liability Insurance**
In addition to the coverages and limits specified above, Contractor shall secure and maintain a limit of liability no less than $1,000,000 each occurrence for all liability.

2. Additional requirements

(a) **Additional Insured**
Cook County, its officials, employees and agents shall be named as additional insureds under the Commercial General Liability policy and Automobile Liability policy. Contractor's insurance shall be primary and non-contributory with any insurance maintained by Cook County. Any insurance or self-insurance maintained by Cook County shall be excess of the Contractor's insurance and shall not contribute with it. The full policy limits and scope of protection shall apply to Cook County as an additional insured even if they exceed the minimum insurance limits specified above.

(b) **Qualification of Insurers**

All insurance companies providing coverage shall be licensed or approved by the Department of Insurance, State of Illinois, and shall have a financial rating no lower than (A-) VII as listed in A.M. Best's Key Rating Guide, current edition or interim report. Companies with ratings lower than (A-) VII will be acceptable only upon written consent of the Cook County Department of Risk Management.

(c) **Insurance Notices**

All policies of insurance which may be required under terms of this Contract shall be endorsed to provide that the insurance company shall notify the Cook County Office of the Chief Procurement Officer, 69 W Washington St., Floor 30, Chicago, Illinois 60602 at least 30 days prior to the effective date of any cancellation or modification of such policies. Prior to the date on which Contractor commences performance of its part of the work, Contractor shall furnish to the County certificates of insurance maintained by Contractor.

In no event shall any failure of the County to receive Certificates of Insurance required hereof or to demand receipt of such Certificates of Insurance be construed as a waiver of Contractor's obligations to obtain insurance pursuant to these insurance requirements.

GC-16 PATENTS, COPYRIGHTS AND LICENSES

Contractor agrees to hold harmless and indemnify the County, its officials, agents, employees and affiliates from and defend, as permitted by Illinois law, at its own expense (including reasonable attorneys', accountants' and consultants' fees), any suit or proceeding brought against County based upon a claim that the ownership and/or use of equipment, hardware and software or any part thereof utilized in performing Contractor's services constitutes an infringement of any patent, copyright or license or any other intellectual property right.

In the event the use of any equipment, hardware or software or any part thereof is enjoined, Contractor with all reasonable speed and due diligence shall provide or otherwise secure for County, at the Contractor's election, one of the following: the right to continue use of the equipment, hardware or software; an equivalent system having the Specifications as provided in this Contract; or to modify the system or its component parts so that it becomes non-infringing while performing in a substantially similar manner to the original system, meeting the Specifications of this Contract.

GC-17 COMPLIANCE WITH LAWS

The Contractor shall observe and comply with the laws, ordinances, regulations and codes of the Federal, State, County and other local government agencies which may in any manner affect the performance of the Contract, including but not limited to those County Ordinances set forth in the Certifications, Affidavits or EDS attached hereto and incorporated

herein. Assurance of compliance with this requirement by the Contractor's employees, agents or subcontractors shall be the responsibility of the Contractor.

The Contractor shall secure and pay for all federal, state and local licenses, permits and fees required in order to perform this Contract.

GC-18 DELIVERY

All Contract goods, equipment or supplies shipped to the County shall be shipped F.O.B., DESTINATION, FREIGHT PREPAID. Arrangements shall be made in advance by the Contractor in order that the County may arrange for receipt of the materials.

Truck deliveries will be accepted before 3:00 P.M. on weekdays only. No deliveries will be accepted on Saturdays, Sundays or County Holidays. The County is not responsible for delivery delays due to waiting times for loading and unloading at delivery locations.

The quantity of Contract goods, equipment or supplies based on weight that are delivered by truck will be ascertained from a weight certificate issued by a duly licensed Public Weight-Master. In the case of delivery by rail, weight will be ascertained from bill of lading from originating line, but the County reserves the right to re-weigh at the nearest available railroad scale.

The County reserves the right to add new delivery locations or delete previously listed delivery locations as required during the Contract period. The only restriction regarding the County's right to add new delivery locations shall be that any new or additional location shall be within the geographical boundaries of the County of Cook.

GC-19 MINORITY AND WOMEN BUSINESS ENTERPRISES COOK COUNTY ORDINANCE CHAPTER 34, DIVISION 8 SECTION 34-260 to SECTION 34-300

I. POLICY AND GOALS

A. It is the policy of the County of Cook to prevent discrimination in the award of or participation in County Contracts and to eliminate arbitrary barriers for participation in such Contracts by local businesses certified as a Minority Business Enterprise (MBE) and Women-owned Business Enterprise (WBE) as both prime and sub-contractors. In furtherance of this policy, the Cook County Board of Commissioners has adopted a Minority- and Women-owned Business Enterprise Ordinance (the "Ordinance") which establishes annual goals for MBE and WBE participation as outlined below:

Contract Type	**Goals**	
	MBE	WBE
Goods and Services	25%	10%
Construction	24%	10%
Professional Services	35% Overall	

B. **The County shall set contract-specific goals, based on the availability of MBEs and WBEs that are certified to provide commodities or services specified in this solicitation document. The MBE/WBE participation goals for each Contract are stated in the Special Conditions.** A Bid, Quotation, or Proposal shall be rejected if the County determines that it fails to comply with this General Condition in any way, including but not limited to: (i) failing to state an enforceable commitment to achieve for this contract the identified MBE/WBE Contract goals; or (ii) failing to include a Petition for Reduction/Waiver, which states that the goals for MBE/WBE participation are not attainable despite the Bidder or Proposer Good Faith Efforts, and explains why. If a Bid, Quotation, or Proposal is rejected, then a new Bid, Quotation, or Proposal may be solicited if the public interest is served thereby.

GC-19 MINORITY AND WOMEN BUSINESS ENTERPRISES COOK COUNTY ORDINANCE CHAPTER 34, DIVISION 8 SECTION 34-260 to SECTION 34-300 (con't.)

C. To the extent that a Bid, Quotation, or Proposal includes a Petition for Reduction/Waiver that is approved by the Office of Contract Compliance, the Contract specific MBE and WBE participation goals may be achieved by the proposed Bidder or Proposer's status as an MBE or WBE; by the Bidder or Proposer's enforceable joint-venture agreement with one or more MBEs and/or WBEs; by the Bidder or Proposer entering into one or more enforceable subcontracting agreements with one or more MBE and WBE; by the Bidder or Proposer establishing and carrying

out an enforceable mentor/protégé agreement with one or more MBE and WBE; by the Bidder or Proposer actively engaging the Indirect Participation of one or more MBE and WBE in other aspects of its business; or by any combination of the foregoing, so long as the Utilization Plan evidences a commitment to meet the MBE and WBE Contract goals set forth in (B) above, as approved by the Office of Contract Compliance.

D. A single Person, as defined in the Procurement Code, may not be utilized as both an MBE and a WBE on the same Contract, whether as a contractor, subcontractor or supplier.

E. Unless specifically waived in the Bid or Proposal Documents, this General Condition, GC-19; the Ordinance; and the policies and procedures promulgated thereunder shall govern. If there is a conflict between this GC-19 and the Ordinance or the policies and procedures, the Ordinance shall control.

F. A Contractor's failure to carry out its commitment regarding MBE and WBE participation in the course of the Contract's performance may constitute a material breach of the Contract. If such breach is not appropriately cured, it may result in withholding of payments under the Contract, contractual penalties, disqualification and any other remedy provided for in Division 4 of the Procurement Code at law or in equity.

II. REQUIRED BID OR PROPOSAL SUBMITTALS

A Bidder or Proposer shall document its commitment to meeting the Contract specific MBE and WBE participation goals by submitting a Utilization Plan with the Bid or Proposal. The Utilization Plan shall include (1) one or more Letter(s) of Intent from the relevant MBE and WBE firms; and (2) current Letters of Certification as an MBE or WBE. Alternatively, the Bidder or Proposer shall submit (1) a written Petition for Reduction/Waiver with the Bid, Quotation or Proposal, which documents its preceding Good Faith Efforts and an explanation of its inability to meet the goals for MBE and WBE participation. The Utilization Plan shall be submitted at the time that the bid or proposal is due**. Failure to include a Utilization Plan will render the submission not Responsive and shall be cause for the CPO to reject the Bid or Proposal**.

A. MBE/WBE Utilization Plan

Each Bid or Proposal shall include a complete Utilization Plan, as set forth on Form 1 of the M/WBE Compliance Forms. The Utilization Plan shall include the name(s), mailing address, email address, and telephone number of the principal contact person of the relevant MBE and WBE firms. If the Bidder or Proposer submits a Bid or Proposal, and any of their subcontractors, suppliers or consultants, are certified MBE or WBE firms, they shall be identified as an MBE or WBE within the Utilization Plan.

1. Letter(s) of Intent

Except as set forth below, a Bid or Proposal shall include, as part of the Utilization Plan, one or more Letter(s) of Intent, as set forth on Form 2 of the M/WBE Compliance Forms, executed by each MBE and WBE and the Bidder or Proposer. The Letter(s) of Intent will be used to confirm that each MBE and WBE shall perform work as a subcontractor, supplier, joint venture, or consultant on the Contract. Each Letter of Intent shall indicate whether and the degree to which the MBE or WBE will provide goods or services directly or indirectly during the term of the Contract. The box for direct participation shall be marked if the proposed MBE or WBE will provide goods or services directly related to the scope of the Contract. The box for Indirect participation shall be marked if the proposed MBE or WBE will not be directly involved in the Contract but will be utilized by the Bidder or Proposer for other services not related to the Contract. Indirect Participation shall not be counted toward the participation goal. Each Letter of Intent shall accurately detail the work to be performed by the relevant MBE or WBE firm, the agreed dollar amount, the percentage of work, and the terms of payment.

Failure to include Letter(s) of Intent will render the submission not Responsive and shall be cause for the CPO to reject the Bid or Proposal.

.

All Bids and Proposals must conform to the commitments made in the corresponding Letter(s) of Intent, as may be amended through change orders.

The Contract Compliance Director may at any time request supplemental information regarding Letter(s) of Intent, and such information shall be furnished if the corresponding Bid or Proposal is to be deemed responsive.

2. Letter(s) of Certification

Only current Letter(s) of Certification from one of the following entities may be accepted as proof of certification for MBE/WBE status, provided that Cook County's requirements for certification are met:

- County of Cook
- City of Chicago

Persons that are currently certified by the City of Chicago in any area other than Construction/Public Works shall also complete and submit a MBE/WBE Reciprocal Certification Affidavit along with a current letter of certification from the City of Chicago. This Affidavit form can be downloaded from www.cookcountyil.gov/contractcompliance.

The Contract Compliance Director may reject the certification of any MBE or WBE on the ground that it does not meet the requirements of the Ordinance, or the policies and rules promulgated thereunder.

3. Joint Venture Affidavit

In the event a Bid or Proposal achieves MBE and/or WBE participation through a Joint Venture, the Bid or Proposal shall include the required Joint Venture Affidavit, which can be downloaded from www.cookcountyil.gov/contractcompliance. The Joint Venture Affidavit shall be submitted with the Bid or Proposal, along with current Letter(s) of Certification.

B. Petition for Reduction/Waiver

In the event a Bid or Proposal does not meet the Contract specific goals for MBE and WBE participation, the Bid or Proposal shall include a Petition for Reduction/Waiver, as set forth on Form 3. The Petition for Reduction/Waiver shall be supported by sufficient evidence and documentation to demonstrate the Bidder or Proposer's Good Faith Efforts in attempting to achieve the applicable MBE and WBE goals, and its inability to do so despite its Good Faith Efforts.

Failure to include Petition for Reduction/Waiver will render the submission not Responsive and shall be cause for the CPO to reject the Bid or Proposal.

III. REDUCTION/WAIVER OF MBE/WBE GOALS

A. Granting or Denying a Reduction/Waiver Request.

1. The adequacy of the Good Faith Efforts to utilize MBE and WBE firms in a Bid or Proposal will be evaluated by the CCD under such conditions as are set forth in the Ordinance, the policies and rules promulgated thereunder, and in the "Petition for Reduction/Waiver of MBE/WBE Participation Goals" – Form 3 of the M/WBE Compliance Forms.

2. With respect to a Petition for Reduction/Waiver, the sufficiency or insufficiency of a Bidder or Proposer's Good Faith Efforts shall be evaluated by the CCD as of the date upon which the corresponding Bid or Proposal was due.

3. The Contract Compliance Director or his or her duly authorized Waiver Committee may grant or deny the

4. Petition for Reduction/Waiver based upon factors including but not limited to: (a) whether sufficient qualified MBE and WBE firms are unavailable despite good faith efforts on the part of the Bidder or Proposer; (b) the degree to which specifications and the reasonable and necessary requirements for performing the Contract make it impossible or economically infeasible to divide the Contract into sufficiently small tasks or quantities so as to enable the Bidder or Proposer to utilize MBE and WBE firms in accordance with the applicable goals; (c) the degree to which the prices or prices required by any potential MBE or WBE are more that 10% above competitive levels; and (d) such other factors as are determined relevant by the Contract Compliance Director or the duly authorized Waiver Committee.

5. If the Contract Compliance Director or the duly authorized Waiver Committee determines that the Bidder or Proposer has not demonstrated sufficient Good Faith Efforts to meet the applicable MBE and WBE goals, the Contract Compliance Director or the duly authorized Waiver Committee may deny a Petition for

Reduction/Waiver, declare the Bid or Proposal non-responsive, and recommend rejection of the Bid, Quotation, or Proposal.

IV. CHANGES IN CONTRACTOR'S UTILIZATION PLAN

A. A Contractor, during its performance of the Contract, may not change the original MBE or WBE commitments specified in the relevant Utilization Plan, including but not limited to, terminating a MBE or WBE Contract, reducing the scope of the work to be performed by a MBE/WBE, or decreasing the price to a MBE/WBE, except as otherwise provided by the Ordinance and according to the policies and procedures promulgated thereunder.

B. Where a Person listed under the Contract was previously considered to be a MBE or WBE but is later found not to be, or work is found not to be creditable toward the MBE or WBE goals as stated in the Utilization Plan, the Contractor shall seek to discharge the disqualified enterprise, upon proper written notification to the Contract Compliance Director, and make every effort to identify and engage a qualified MBE or WBE as its replacement. Failure to obtain an MBE or WBE replacement within 30 business days of the Contract Compliance Director's written approval of the removal of a purported MBE or WBE may result in the termination of the Contract or the imposition of such remedy authorized by the Ordinance, unless a written Petition for Reduction/Waiver is granted allowing the Contractor to award the work to a Person that is not certified as an MBE or WBE.

V. NON-COMPLIANCE

If the CCD determines that the Contractor has failed to comply with its contractual commitments or any portion of the Ordinance, the policies and procedures promulgated thereunder, or this GC-19, the Contract Compliance Director shall notify the Contractor of such determination and may take any and all appropriate actions as set forth in the Ordinance or the policies and procedures promulgated thereunder which includes but is not limited to disqualification, penalties, withholding of payments or other remedies in law or equity.

VI. REPORTING/RECORD-KEEPING REQUIREMENTS

The Contractor shall comply with the reporting and record-keeping requirements in the manner and time established by the Ordinance, the policies and procedure promulgated thereunder, and the Contract Compliance Director. Failure to comply with such reporting and record-keeping requirements may result in a declaration of Contract default. Upon award of a Contract, a Contractor shall acquire and utilize all Cook County reporting and record-keeping forms and methods which are made available by the Office of Contract Compliance. MBE and WBE firms shall be required to verify payments made by and received from the prime contractor.

GC-19 MINORITY AND WOMEN BUSINESS ENTERPRISES
COOK COUNTY ORDINANCE CHAPTER 34, DIVISION 8 SECTION 34-260 to SECTION 34-300 (con't.)

VII. EQUAL EMPLOYMENT OPPORTUNITY

Compliance with MBE and WBE requirements will not diminish or supplant other legal Equal Employment Opportunity and Civil Rights requirements that relate to contractor and subcontractor obligations.

Any questions regarding this section should be directed to:

Contract Compliance Director
Cook County
161 N. Clark Street, Suite 2300
Chicago, Illinois 60601
(312) 603-5502

GC-20 MATERIAL DATA SAFETY SHEET

Where required under the Illinois "Toxic Substance Disclosure to Employees Act", Illinois Compiled Statutes, 820 ILCS 255/1, Contractor shall submit with each delivery of Contract goods, equipment or supplies a Material Data Safety Sheet.

GENERAL CONDITIONS

GC-21 CONDUCT OF THE CONTRACTOR

The Contractor agrees to inform the County on a timely basis of all of the Contractor's interests, if any, which are or which the Contractor reasonably believes may be incompatible with any interest of the County. The Contractor shall take notice of and comply with the Illinois Lobbyist Registration Act, 25 ILCS 170. The Contractor shall not use for personal gain or make other improper use of privileged information which is acquired in connection with the Contract.

GC-22 ACCIDENT REPORTS

The Chief Procurement Officer and Director shall be given written notification within twenty-four (24) hours of any occurrence, on the site or otherwise, which pertains in any way to the performance of this Contract and involves the Contractor's personnel, or those of any of his subcontractors or others whether said occurrence be in the nature of bodily injury to employees or third parties or property damage.

The report shall include the name of person(s) injured, name of his employer, date, time and location of occurrence, extent of injury and/or damage, name(s) of eyewitnesses, and who treated the person(s) for injuries sustained, and such other information as may be relevant. The Contractor shall notify the local police of any occurrence requiring an official police record. The accident report should indicate whether the police were notified and, if so, the number of the police report.

GC-23 USE OF PREMISES

Contractor shall confer with the Director to ascertain full knowledge of all rules and regulations of the County facilities relative to this Contract and shall comply therewith. The Contractor shall confine the operations of its employees to the limits indicated by laws, ordinances, permits and/or direction of the Director and shall not encumber the premises with materials or debris. The Contractor shall not load or permit any part of the structure to be loaded with a weight that will endanger its structural integrity.

The County reserves the right to prohibit any person from entering any County facility for any reason. All subcontractors, agents and employees of the Contractor shall be accountable to the Director while on any County property and shall abide by all security regulations imposed by the County.

GC-24 GENERAL NOTICE

All notices required pursuant to this Contract shall be in writing and addressed to the parties at their respective addresses set forth below. All such notices shall be deemed duly given if hand delivered or if deposited in the United States mail, registered or certified, return receipt requested. Notice as provided herein does not waive service of summons or process.

TO THE COUNTY:

Chief Procurement Officer
County of Cook
161 N. Clark Street, Suite 2300
Chicago, Illinois 60601
(Reference County Contract Number)

TO THE CONTRACTOR:

At address provided in its bid document or as otherwise indicated in writing to County.

GC-25 TERMINATION FOR CONVENIENCE

The County may terminate this Contract, or any portion, at any time by notice in writing from the County to the Contractor. Unless otherwise stated in the notice, the effective date of such termination shall be three business days after the date the notice of termination is mailed by the County. If the County elects to terminate the Contract in full, unless otherwise specified in the notice of termination, the Contractor shall immediately cease performance and shall promptly tender to the County all work products, reviews, recommendations, reports, documents and analyses, whether completed or in process. If the County elects to terminate the Contract in part, unless otherwise specified in the notice of partial termination, the Contractor shall immediately cease performance of those portions of the Contract which are terminated and shall promptly tender to the County all work products, reviews, recommendations, reports, documents and analyses relating to said portions of the Contract, whether completed or in process. Contractor shall refrain from incurring any further costs with respect to portions of the Contract which are terminated except as specifically approved

by the Chief Procurement Officer. The Contractor shall not invoice the County for any goods, equipment, supplies or services provided after the effective date of termination.

GC-26 GUARANTEES AND WARRANTIES

Unless otherwise stated herein, all guarantees and warranties required shall be furnished by the Contractor and shall be delivered to the Director before final payment on the Contract is issued. The Contractor agrees that the Contract goods, equipment, supplies or services to be furnished shall be covered by the most favorable commercial warranties the Contractor gives to any customer for the same or substantially similar Contract goods, equipment, supplies or services and that the rights and remedies so provided are in addition to and do not limit any rights afforded to County.

GC-27 STANDARD OF CONTRACT GOODS, EQUIPMENT OR SUPPLIES

Only new, originally manufactured Contract goods, equipment or supplies will be accepted by the County. The County will not accept any Contract goods, equipment or supplies that have been refurbished, rebuilt, restored or renovated in any manner. In addition, experimental materials will not be acceptable. Contract goods, equipment or supplies not produced by regular production methods and/or which have not been offered for sale to the public through accepted industry trade channels for a reasonable period of time prior to the offering of the proposal, will be considered experimental.

GC-28 CONFIDENTIALITY AND OWNERSHIP OF DOCUMENTS

Contractor acknowledges and agrees that information regarding this Contract is confidential and shall not be disclosed, directly, indirectly or by implication, or be used by Contractor in any way, whether during the term of this Contract or at any time thereafter, except solely as required in the course of Contractor's performance of the Contract. Contractor shall comply with the applicable privacy laws and regulations affecting the County and will not disclose any of County's records, materials, or other data to any third party. Contractor shall not have the right to compile and distribute statistical analyses and reports utilizing data derived from information or data obtained from County without the prior written approval of County. In the event such approval is given, any such reports published and distributed by Contractor shall be furnished to County without charge.

GC-28 CONFIDENTIALITY AND OWNERSHIP OF DOCUMENTS (con't.)

All documents, data, studies, reports, work product or product created as a result of the performance of this Contract shall be the property of the County of Cook. It shall be a breach of this Contract for the Contractor to reproduce or use, any documents, data, studies, report, work product or product obtained from the County of Cook or created hereby for its own purposes or to be copied and used by any third party. During the performance of the services herein provided for, the Contractor shall be responsible of any loss or damage to the County's documents while they are in the Contractor's possession, and any such document lost or damaged shall be restored at the expense of the Contractor.

GC-29 QUANTITIES

The quantities of materials required for the performance of the Contract are estimates for the purpose of determining an approximate total Contract amount and may not be the actual quantities required during the term of the Contract. The County reserves the right to increase or decrease the quantities at the Contract price, to correspond to the actual needs of the County. The County will be obligated to order and pay for only such quantities as are from time to time ordered, delivered, and accepted on purchase orders issued by the County.

GC-30 AUDIT; EXAMINATION OF RECORDS

The Contractor agrees that the Cook County Auditor or any of its duly authorized representatives shall, until expiration of three (3) years after the final payment under the Contract, have access and the right to examine any books, documents, papers, canceled checks, bank statements, purveyor's and other invoices, and records of the Contractor related to the Contract, or to Contractor's compliance with any term, condition or provision thereof. The Contractor shall be responsible for establishing and maintaining records sufficient to document the costs associated with performance under the terms of this Contract.

The Contractor further agrees that it shall include in all of its subcontracts hereunder a provision to the effect that the subcontractor agrees that the Cook County Auditor or any of its duly authorized representatives shall, until expiration of three (3) years after final payment under the subcontract, have access and the right to examine any books, documents, papers, canceled checks, bank statements, purveyor's and other invoices and records of such

subcontractor involving transactions relating to the subcontract, or to such subcontractor's compliance with any term, condition or provision thereunder or under the Contract.

In the event the Contractor receives payment under the Contract, reimbursement for which is later disallowed by the County, the Contractor shall promptly refund the disallowed amount to the County on request, or at the County's option, the County may credit the amount disallowed from the next payment due or to become due to the Contractor under any contract with the County.

GC-31 GOVERNING LAW

This Contract shall be governed by and construed under the laws of the State of Illinois. The Contractor irrevocably agrees that, subject to the County's sole and absolute election, any action or proceeding in any way, manner or respect arising out of the Contract, or arising from any dispute or controversy in connection with or related to the Contract, shall be litigated only in courts within the Circuit Court of Cook County, State of Illinois, and the Contractor consents and submits to the jurisdiction thereof. In accordance with these provisions, Contractor waives any right it may have to transfer or change the venue of any litigation brought against it by the County pursuant to this Contract.

GC-32 COOPERATION WITH INSPECTOR GENERAL

Contractors, subcontractors, licensees, grantees or persons or businesses who have a County contract, grant, license, or certification of eligibility for County contracts shall abide by all of the applicable provisions of the Office of the Independent Inspector General Ordinance (Section 2-281 et. seq. of the Cook County Code of Ordinances). Failure to cooperate as required may result in monetary and/or other penalties.

GC-33 WAIVER

No term or provision of this Contract shall be deemed waived and no breach consented to unless such waiver or consent shall be in writing and signed by the party claimed to have waived or consented. The waiver of any such provision shall be strictly limited to the identified term or provision.

GC-34 ENTIRE CONTRACT

It is expressly agreed that the provisions set forth in this Contract constitute all the understandings and agreements between the parties. Any prior agreements, promises, negotiations, or representations not expressly set forth in this Contract are of no force and effect.

GC-35 FORCE MAJEURE

Neither Contractor nor County shall be liable for failing to fulfill any obligation under this Contract if such failure is caused by an event beyond such party's reasonable control and which is not caused by such party's fault or negligence. Such events shall be limited to acts of God, acts of war, fires, lightning, floods, epidemics, or riots.

GC-36 GOVERNMENTAL JOINT PURCHASING AGREEMENT

Pursuant to Section 4 of the Illinois Governmental Joint Purchasing Act (30 ILCS 525) and the Joint Purchase Agreement approved by the Cook County Board of Commissioners (April 9, 1965), other units of government may purchase goods, supplies, equipment or services under this Contract.
In the event that other agencies participate in a joint procurement, the County reserves the right to renegotiate the price to accommodate the larger volume.

GC-37 COMPARABLE GOVERNMENT PROCUREMENT

As permitted by the County of Cook, other government entities, if authorized by law, may wish to also purchase the goods, supplies, services or equipment under the same terms and conditions contained in this Contract (i.e., comparable government procurement). Each entity wishing to reference this Contract must have prior authorization from the County of Cook and the Contractor. If such participation is authorized, all purchase orders will be issued directly from and shipped directly to the entity requiring the goods, supplies, equipment or services. The County shall not be held responsible for any orders placed, deliveries made or payment for the goods, supplies, equipment or services ordered by these entities. Each entity reserves the right to determine the amount of goods, supplies, equipment or services it wishes to purchase under this Contract.

GC-38 FEDERAL CLAUSES

GENERAL CONDITIONS

The following provisions apply to all Contracts which are funded in whole or in part with federal funds.
1. Interest of Members of or Delegates to the United States Congress
In accordance with 41 U.S.C. § 22, the Contractor agrees that it will not admit any member of or delegate to the United States Congress to any share or part of the Contract or any benefit derived therefrom.

The following provisions apply to all Contracts which are funded in whole or in part with federal funds.

1. Interest of Members of or Delegates to the United States Congress

In accordance with 41 U.S.C. § 22, the Contractor agrees that it will not admit any member of or delegate to the United States Congress to any share or part of the Contract or any benefit derived therefrom.

2. False or Fraudulent Statements and Claims

(a) The Contractor recognizes that the requirements of the Program Fraud Civil Remedies Act of 1986, as amended, 49 U.S.C. §§ 3081 et seq and U.S. DOT regulations, "Program Fraud Civil Remedies," 49 C.F.R. Part 31, apply to its actions pertaining to the Contract. Accordingly, by signing the Contract, the Contractor certifies or affirms the truthfulness and accuracy of any statement it has made, it makes, or it may make pertaining to the Contract, including without limitation any invoice for its services. In addition to other penalties that may be applicable, the Contractor also acknowledges that if it makes a false, fictitious, or fraudulent claim, statement, submission, or certification, the Federal Government reserves the right to impose the penalties of the Program Fraud Civil Remedies Act of 1986, as amended, on the Contractor to the extent the Federal Government deems appropriate.

GC-38 FEDERAL CLAUSES (con't.)

(b) The Contractor also acknowledges that if it makes a false, fictitious, or fraudulent claim, statement, submission, or certification to the County or Federal Government in connection with an urbanized area formula project financed with Federal assistance authorized by 49 U.S.C. § 5307, the Government reserves the right to impose on the Contractor the penalties of 18 U.S.C. § 1001 and 49 U.S.C. § 5307(n)(1), to the extent the Federal Government deems appropriate.

3. Federal Interest in Patents

(a) General. If any invention, improvement, or discovery of the Contractor is conceived or first actually reduced to practice in the course of or under the Contract, and that invention, improvement, or discovery is patentable under the laws of the Unites States of America or any foreign country, the Contractor agrees to notify County immediately and provide a detailed report.

(b) Federal Rights. Unless the Federal Government later makes a contrary determination in writing, the rights and responsibilities of the County, Contractor, and the Federal Government pertaining to that invention, improvement, or discovery will be determined in accordance with applicable Federal laws and regulations, including any waiver thereof. Unless the Federal Government later makes a contrary determination in writing, the Contractor agrees that, irrespective of its status or the status of any subcontractor at any tier (e.g., a large business, small business, non-profit organization, institution of higher education, individual), the Contractor agrees it will transmit to the Federal Government those rights due the Federal Government in any invention resulting from the contract.

4. Federal Interest in Data and Copyrights

(a) Definition. The term "subject data" used in this section means recorded information, whether or not copyrighted, that is delivered or specified to be delivered under the Contract. Examples include, but are not limited, to: computer software, engineering drawings and associated lists, specifications, standards, process sheets, manuals, technical reports, catalog item identifications, and related information. The term "subject data" does not include financial reports, cost analyses, and similar information incidental to Contract administration.

(b) Federal Restrictions. The following restrictions apply to all subject data first produced in the performance of the Contract. Except as provided in the Contract and except for its own internal use, the Contractor may not publish or publicly reproduce subject data in whole or in part, or in any manner or form, nor may the Contractor authorize others to do so, without the written consent of the County and the Federal Government, until such time as the Federal Government may have either released or approved the release of such data to the public.

(c) Federal Rights in Data and Copyrights. In accordance with subparts 34 and 36 of the Common Rule, the County and the Federal Government reserve a royalty-free, non-exclusive and irrevocable license to reproduce, publish, or otherwise use, and to authorize others to use, for County or Federal Government purposes, the types of subject data described below. Without the copyright owner's consent, the County and Federal Government may not extend their license to other parties.

(1) Any subject data developed under the contract or subagreement financed by a federal Grant Agreement or Cooperative Agreement, whether or not a copyright has been obtained; and

(2) Any rights of copyright which the Contractor purchases ownership with Federal assistance.

GC-38 FEDERAL CLAUSES (con't.)

(d) Special Federal Rights for Planning Research and Development Projects. When the Federal Government provides financial assistance for a planning, research, development, or demonstration project, its general intention is to increase public knowledge, rather than limit the benefits of the project to participants in the project. Therefore, unless the Federal Government determines otherwise, the Contractor on a planning, research, development, or demonstration project agrees that, in addition to the rights in data and copyrights set forth above, the County or Federal Government may make available to any third party either a license in the copyright to the subject data or a copy of the subject data. If the project is not completed for any reason whatsoever, all data developed under the project will become subject data and will be delivered as the County or Federal Government may direct. This subsection, however, does not apply to adaptions of automatic data processing equipment or previously existing software programs for the County's use whose costs are financed with Federal transportation funds for capital projects.

(e) Hold Harmless. Unless prohibited by state law, upon request by the County or the Federal Government, the Contractor agrees to indemnify, save, and hold harmless the County and the Federal Government and their officers, agents, and employees acting within the scope of their official duties against any liability, including costs and expenses, resulting from any willful or intentional violation by the Contractor of proprietary rights, copyrights, or right of privacy, arising out of the publication, translation, reproduction, delivery, use, or disposition of any data furnished under the Contract. The Contractor will not be required to indemnify the County or Federal Government for any such liability arising out of the wrongful acts of employees or agents of the County or Federal Government.

(f) Restrictions on Access to Patent Rights. Nothing contained in this section on rights in data will imply a license to the County or Federal Government under any patent or be construed as affecting the scope of any license or other right otherwise granted to the County or Federal Government under any patent.

(g) Application on Materials Incorporated into Project. The requirements of Subsections 2, 3, and 4 of this Section do not apply to material furnished by the County and incorporated into the work.

5. Records and Audits

Contractor will deliver or cause to be delivered all documents (including but not limited to all Deliverables and supporting data, records, graphs, charts and notes) prepared by or for the County under the terms of this Agreement to the County promptly in accordance with the time limits prescribed in this Contract, and if no time

limit is specified, then upon reasonable demand therefor or upon termination or completion of the Services hereunder. In the event of the failure by the Contractor to make such delivery, then and in that event, the Contractor will pay to County reasonable damages the County may sustain by reason thereof.

The County and the Federal Government will have the right to audit all payments made to the Contractor under this Agreement. Any payments to the Contractor which exceed the amount to which the Contractor is entitled under the terms of this Agreement will be subject to set-off.

The Contractor will keep and retain records relating to this Agreement and will make such records available to representatives of the County and the Federal Government, including without limitation the sponsoring federal agency, other participating agencies, and the Comptroller General of the United States, at reasonable times during the performance of this Agreement and for at least five years after termination of this Agreement for purposes of audit, inspection, copying, transcribing and abstracting.

No provision in this Agreement granting the County or the Federal Government a right of access to records is intended to impair, limit or affect any right of access to such records which the County or the Federal Government would have had in the absence of such provisions.

GC-38 FEDERAL CLAUSES (con't.)

6. Environmental Requirements

The Contractor recognizes that many Federal and state laws imposing environmental and resource conservation requirements may apply to the Contract. Some, but not all, of the major Federal Laws that may affect the Contract include: the National Environmental Policy Act of 1969, as amended, 42 U.S.C. §§ 4321 et seq.; the Clean Air Act, as amended, 42 U.S.C. §§ 7401 et seq. and scattered sections of 29 U.S.C.; the Clean Water Act, as amended, scattered sections of 33 U.S.C. and 12 U.S.C.; the Resource Conservation and Recovery Act, as amended, 42 U.S.C. §§ 6901 et seq.; and the Comprehensive Environmental Response, Compensation, and Liability Act, as amended, 42 U.S.C. §§ 9601 et seq. The Contractor also recognizes that U.S. EPA, U.S. DOT and other agencies of the Federal Government have issued and are expected in the future to issue regulations, guidelines, standards, orders, directives, or other requirements that may affect the Contract. Thus, the Contractor agrees to adhere to, and impose on its subcontractors, any such Federal requirements as the Federal Government may now or in the future promulgate. Listed below are requirements of particular concern.

The Contractor acknowledges that this list does not constitute the Contractor's entire obligation to meet all Federal environmental and resource conservation requirements. The Contractor will include these provisions in all subcontracts.

(a) Environmental Protection. The Contractor agrees to comply with the applicable requirements of the National Environmental Policy Act of 1969, as amended, 42 U.S.C. §§ 4321 et seq. in accordance with Executive Order No. 12898, "Federal Actions to Address Environmental Justice in Minority Populations and Low-Income Populations," 59 Fed. Reg. 7629, Feb. 16, 1994; U.S. DOT statutory requirements on environmental matters at 49 U.S.C. § 5324(b); Council on Environmental Quality regulations on compliance with the National Environmental Policy Act of 1969, as amended, 40 C.F.R. Part 1500 et seq.; and U.S. DOT regulations, "Environmental Impact and Related Procedures," 23 C.F.R. Part 771 and 49 C.F.R. Part 622.

(b) Air Quality. The Contractor agrees to comply with all applicable standards, orders, or regulations issued pursuant to the Clean Air Act, as amended, 42 U.S.C. §§ 7401 et seq. Specifically, the Contractor agrees to comply with applicable requirements of U.S. EPA regulations, "Conformity to State of Federal Implementation Plans of Transportation Plans, Programs, and Projects Developed, Funded or Approved Under Title 23 U.S.C. or the Federal Transit Act," 40 C.F.R. Part 51, Subpart T; and "Determining Conformity of Federal Actions to State or Federal Implementation Plans," 40 C.F.R. Part 93. The Contractor further agrees to report and require each subcontractor at any tier to report

any violation of these requirements resulting from any Contract implementation activity to the County and the appropriate U.S. EPA Regional Office.

(c) Clean Water. The Contractor agrees to comply with all applicable standards, orders, or regulations issued pursuant to the Federal Water Pollution Control Act, as amended, 33 U.S.C. §§ 1251 et seq. The Contractor further agrees to report and require each subcontractor at any tier to report any violation of these requirements resulting from any Contract implementation activity to the County and the appropriate U.S. EPA Regional Office.

(d) List of Violating Facilities. The Contractor agrees that any facility to be used in the performance of the Contract or to benefit from the Contract will not be listed on the U.S. EPA List of Violating Facilities ("List"), and the Contractor will promptly notify the County if the Contractor receives any communication from the U.S. EPA that such a facility is under consideration for inclusion on the List.

GC-38 FEDERAL CLAUSES (con't.)

(e) Preference for Recycled Products. To the extent practicable and economically feasible and to the extent that it does not reduce or impair the quality of the work, the Contractor agrees to use recycled products in performance of the Contract pursuant to U.S. Environment Protection Agency (U.S. EPA) guidelines at 40 C.F.R. Parts 247-253, which implement section 6002 of the Resource Conservation and Recovery Act, as amended, 42 U.S.C. § 6962.

7. No Exclusionary or Discriminatory Specifications

Apart from inconsistent requirements imposed by Federal statute or regulations, the Contractor agrees that it will comply with the requirements of 49 U.S.C. § 5323(h)(2) by refraining from using any Federal assistance to support subcontracts procured using exclusionary or discriminatory specifications.

8. Cargo Preference - Use of United States Flag Vessels

The Contractor agrees to comply with U.S. Maritime Administration regulations, "Cargo-Preference -- U.S. Flag Vessels," 49 C.F.R. Part 381, and to include the clauses required by those regulations, modified as necessary to identify the affected parties, in each subcontract or subagreement involving equipment, materials, or commodities suitable for transport by ocean vessel.

9. Fly America

Section 14.c of the Master Agreement states that if the contract or subcontracts may involve the international transportation of goods, equipment, or personnel by air, the contract must require Contractors and subcontractors at every tier to use U.S.-flag air carriers, to the extent service by these carriers is available. 49 U.S.C. 40118 and 4 C.F.R. Part 52.

10. No Federal Government Obligations to Third Parties

The Contractor agrees that, absent the Federal Government's express written consent, the Federal Government will not be subject to any obligations or liabilities to any contractor or any other person not a party to the Grant Agreement or Cooperative Agreement between the County and the Federal Government which is a source of funds for this Contract. Notwithstanding any concurrence provided by the Federal Government in or approval of any solicitation, agreement, or contract, the Federal Government continues to have no obligations or liabilities to any party, including the Contractor.

11. Allowable Costs

Notwithstanding any compensation provision to the contrary, the Contractor's compensation under this Contract will be limited to those amounts which are allowable and allocable to the Contract in accordance

with OMB Circular A-87 and the regulations in 49 C.F.R. Part 18. To the extent that an audit reveals that the Contractor has received payment in excess of such amounts, the County may offset such excess payments against any future payments due to the Contractor and, if no future payments are due or if future payments are less than such excess, the Contractor will promptly refund the amount of the excess payments to the County.

12. Trade Restrictions

Contractor certifies that neither it nor any Subcontractor:

GC-38 FEDERAL CLAUSES (con't.)

(a) is owned or controlled by one or more citizens of a foreign country included in the list of countries that discriminate against U.S. firms published by the Office of the United States Trade Representative (USTR);

(b) has knowingly entered into any contract or subcontract with a person that is a citizen or national of a foreign country on said list, nor is owned or controlled directly or indirectly by one or more citizens or nationals of a foreign country on said list;

(c) will procure, subcontract for, or recommend any product that is produced in a foreign country on said list.

Unless the restrictions of this clause are waived by the Secretary of Transportation in accordance with 49 CFR 30.17, no Notice-to-Proceed will be issued to an entity who is unable to certify to the above. If Contractor knowingly procures or subcontracts for the supply of any product or service of a foreign country on said list for use on the project, the USDOT may direct, through the County, cancellation of the Contract at no cost to the Government.

Further, Contractor agrees that it will incorporate this provision for certification without modification in each subcontract. Contractor may rely on the certification of a prospective Subcontractor unless it has knowledge that the certification is erroneous. Contractor will provide immediate written notice to the County if it learns that its certification or that of a Subcontractor was erroneous when submitted or has become erroneous by reason of changed circumstances. Each Subcontractor must agree to provide written notice to Contractor if at any time it learns that its certification was erroneous by reason of changed circumstances. Nothing contained in the foregoing will be construed to require establishment of a system of records in order to render, in good faith, the certification required by this provision.

The knowledge and information of the Contractor is not required to exceed that which is normally possessed by a prudent person in the ordinary course of business dealings.

This certification concerns a matter within the jurisdiction of an agency of the United States of America and the making of a false, fictitious, or fraudulent certification may render the maker subject to prosecution under Title 18, United States Code, Section 100.

13. Contract Work Hours and Safety Standards Act

If applicable according to their terms, the Contractor agrees to comply and assures compliance with sections 102 and 107 of the Contract Work Hours and Safety Standards Act, as amended, 40 U.S.C. §§ 327 through 333, and implementing U.S. DOL regulations, "Labor Standards Provisions Applicable to Contracts Governing Federally Financed and Assisted Construction (also Labor Standards Provisions Applicable to Nonconstruction Contracts Subject to the Contract Work Hours and Safety Standards Act)," 29 C.F.R. Part 5; and U.S. DOL regulations, "Safety and Health Regulations for Construction," 29 C.F.R. Part 1926. In addition to other requirements that may apply:

(a) In accordance with section of the Contract Work Hours and Safety Standards Act, as amended, 40 U.S.C. §§ 327 through 332, the Contractor agrees and assures that, for the Contract, the wages of every mechanic and laborer will be computed on the basis of a standard work week of 40 hours, and that each worker will be compensated for work exceeding the standard work week at a rate of not less than 1.5 times the basic rate of pay for all hours worked in excess of 40 hours in the work week.

The Contractor agrees that determinations pertaining to these requirements will be made in accordance with applicable U.S. DOL regulations, "Labor Standards Provisions Applicable to Contracts Governing Federally Financed and Assisted Construction (also Labor Standards Provisions Applicable to Nonconstruction Contracts Subject to the Contract Work Hours and Safety Standards Act)," 29 C.F.R. Part 5.

GC-38 FEDERAL CLAUSES (con't.)

(b) In accordance with section 107 of the Contract Work Hours and Safety Standards Act, as amended, 40 U.S.C. § 333, the contractor agrees and assures that no laborer or mechanic working on a construction contract will be required to work in surroundings or under working conditions that are unsanitary, hazardous, or dangerous to his or her health and safety, as determined in accordance with U.S. DOL regulations, "Safety and Health Regulations for Construction," 29 C.F.R. Part 1926.

14. Veteran's Preference

In the employment of labor (except in executive, administrative, and supervisory positions), preference will be given to Vietnam-era veterans and disabled veterans. However, this preference may be given only where individuals are available and qualified to perform the work to which employment relates.

15. Copyright Ownership

Consultant and the County intend that, to the extent permitted by law, the Deliverables to be produced by Consultant at the County's instance and expense pursuant to this Agreement are conclusively deemed "works made for hire" within the meaning and purview of Section 101 of the United States Copyright Act, 17 U.S.C. §101 et seq. (the "Copyright Act"), and that the County will be the copyright owner of the Deliverables and of all aspects, elements and components of them in which copyright can subsist.

To the extent that any Deliverable does not qualify as a "work made for hire," Consultant irrevocably grants, conveys, bargains, sells, assigns, transfers and delivers to the County, its successors and assigns, all right, title and interest in and to the copyrights and all U.S. and foreign copyright registrations, copyright applications and copyright renewals for them, and other intangible, intellectual property embodied in or pertaining to the Deliverables prepared for the County under this Agreement, free and clear of any liens, claims or other encumbrances, to the fullest extent permitted by law. Consultant will execute all documents and perform all acts that the County may reasonably request in order to assist the County in perfecting its rights in and to the copyrights relating to the Deliverables, at the sole expense of the County.

Consultant warrants to County, its successors and assigns, that on the date of transfer Consultant is the lawful owner of good and marketable title in and to the copyrights for the Deliverables and has the legal rights to fully assign them. Consultant further warrants that it has not assigned any copyrights nor granted any licenses, exclusive or nonexclusive, to any other party, and that it is not a party to any other agreements or subject to any other restrictions with respect to the Deliverables. Consultant warrants and represents that the Deliverables are complete and comprehensive, and the Deliverables are a work of original authorship.

16. Accessibility Compliance

If this Agreement involves design for construction, the Consultant warrants that all design documents produced or utilized under this Agreement and all construction or alterations undertaken under this Agreement will comply with all federal, state and local laws and regulations regarding accessibility standards for persons with disabilities or environmentally limited persons including, but not limited to, the following: the Americans with Disabilities Act of 1990, 42 U.S.C. § 12101 et seq. and the Americans with Disabilities Act Accessibility Guidelines for Buildings and Facilities ("ADAAG"); the Architectural Barriers Act, Pub. L. 90-480 (1968), and the Uniform Federal Accessibility Standards ("UFAS"); and the Illinois Environmental Barriers Act, 410 ILCS 25/1 et seq., and all regulations promulgated thereunder , see Illinois Administrative Code, Title 71, Chapter 1, Section 400.110. If the above standards are inconsistent, the Consultant must comply with the standard providing the greatest accessibility. Also, the Consultant must, prior to construction,

review the plans and specifications to insure compliance with the above referenced standards. If the Consultant fails to comply with the foregoing standards, the Consultant must perform again, at no expense, all services required to be re-performed as a direct or indirect result of such failure.

GC-38 FEDERAL CLAUSES (con't.)

17. Visual Rights Act Waiver

The Consultant/Contractor waives any and all rights that may be granted or conferred under Section 106A and Section 113 of the United States Copyright Act, (17 U.S.C. § 101 et seq.) (the "Copyright Act") in any work of visual art that may be provided pursuant to this Agreement. Also, the Consultant/Contractor represents and warrants that the Consultant/Contractor has obtained a waiver of Section 106A and Section 113 of the Copyright Act as necessary from any employees and subcontractors, if any.

18. Equal Employment Opportunity

During the performance of this contract, the contractor agrees as follows:

(1) The contractor will not discriminate against any employee or applicant for employment because of race, color, religion, sex, sexual orientation, gender identity, or national origin. The contractor will take affirmative action to ensure that applicants are employed, and that employees are treated during employment without regard to their race, color, religion, sex, sexual orientation, gender identity, or national origin. Such action shall include, but not be limited to the following:

Employment, upgrading, demotion, or transfer; recruitment or recruitment advertising; layoff or termination; rates of pay or other forms of compensation; and selection for training, including apprenticeship. The contractor agrees to post in conspicuous places, available to employees and applicants for employment, notices to be provided setting forth the provisions of this nondiscrimination clause.

(2) The contractor will, in all solicitations or advertisements for employees placed by or on behalf of the contractor, state that all qualified applicants will receive consideration for employment without regard to race, color, religion, sex, sexual orientation, gender identity, or national origin.

(3) The contractor will not discharge or in any other manner discriminate against any employee or applicant for employment because such employee or applicant has inquired about, discussed, or disclosed the compensation of the employee or applicant or another employee or applicant. This provision shall not apply to instances in which an employee who has access to the compensation information of other employees or applicants as a part of such employee's essential job functions discloses the compensation of such other employees or applicants to individuals who do not otherwise have access to such information, unless such disclosure is in response to a formal complaint or charge, in furtherance of an investigation, proceeding, hearing, or action, including an investigation conducted by the employer, or is consistent with the contractor's legal duty to furnish information.

(4) The contractor will send to each labor union or representative of workers with which he has a collective bargaining agreement or other contract or understanding, a notice to be provided advising the said labor union or workers' representatives of the contractor's commitments under this section, and shall post copies of the notice in conspicuous places available to employees and applicants for employment.

(5) The contractor will comply with all provisions of Executive Order 11246 of September 24, 1965, and of the rules, regulations, and relevant orders of the Secretary of Labor.

(6) The contractor will furnish all information and reports required by Executive Order 11246 of September 24, 1965, and by rules, regulations, and orders of the Secretary of Labor, or pursuant thereto, and will permit access to his books, records, and accounts by the administering agency and the Secretary of Labor for purposes of investigation to ascertain compliance with such rules, regulations, and orders.

(7) In the event of the contractor's noncompliance with the nondiscrimination clauses of this contract or with any of the said rules, regulations, or orders, this contract may be canceled, terminated, or suspended in whole or in part and the contractor may be declared ineligible for further Government contracts or federally assisted construction contracts in accordance with procedures authorized in Executive Order 11246 of September 24,

GC-38 FEDERAL CLAUSES (con't.)

1965, and such other sanctions may be imposed and remedies invoked as provided in Executive Order 11246 of September 24, 1965, or by rule, regulation, or order of the Secretary of Labor, or as otherwise provided by law.

(8) The contractor will include the portion of the sentence immediately preceding paragraph (1) and the provisions of paragraphs (1) through (8) in every subcontract or purchase order unless exempted by rules, regulations, or orders of the Secretary of Labor issued pursuant to section 204 of Executive Order 11246 of September 24, 1965, so that such provisions will be binding upon each subcontractor or vendor. The contractor will take such action with respect to any subcontract or purchase order as the administering agency may direct as a means of enforcing such provisions, including sanctions for noncompliance:

Provided, however, that in the event a contractor becomes involved in, or is threatened with, litigation with a subcontractor or vendor as a result of such direction by the administering agency, the contractor may request the United States to enter into such litigation to protect the interests of the United States.

The applicant further agrees that it will be bound by the above equal opportunity clause with respect to its own employment practices when it participates in federally assisted construction work: Provided, That if the applicant so participating is a State or local government, the above equal opportunity clause is not applicable to any agency, instrumentality or subdivision of such government which does not participate in work on or under the contract.

The applicant agrees that it will assist and cooperate actively with the administering agency and the Secretary of Labor in obtaining the compliance of contractors and subcontractors with the equal opportunity clause and the rules, regulations, and relevant orders of the Secretary of Labor, that it will furnish the administering agency and the Secretary of Labor such information as they may require for the supervision of such compliance, and that it will otherwise assist the administering agency in the discharge of the agency's primary responsibility for securing compliance.

The applicant further agrees that it will refrain from entering into any contract or contract modification subject to Executive Order 11246 of September 24, 1965, with a contractor debarred from, or who has not demonstrated eligibility for, Government contracts and federally assisted construction contracts pursuant to the Executive Order and will carry out such sanctions and penalties for violation of the equal opportunity clause as may be imposed upon contractors and subcontractors by the administering agency or the Secretary of Labor pursuant to Part II, Subpart D of the Executive Order. In addition, the applicant agrees that if it fails or refuses to comply with these undertakings, the administering agency may take any or all of the following actions: Cancel, terminate, or suspend in whole or in part this grant (contract, loan, insurance, guarantee); refrain from extending any further assistance to the applicant under the program with respect to which the failure or refund occurred until satisfactory assurance of future compliance has been received from such applicant; and refer the case to the Department of Justice for appropriate legal proceedings.

19. Copeland "Anti-Kickback" Act (40 U.S.C. 3145))

All contracts and subgrants in excess of $2000 for construction or repair awarded by recipients and subrecipients shall include a provision for compliance with the Copeland "Anti-Kickback" Act (40 U.S.C. 3145), as supplemented by Department of Labor regulations (29 CFR part 3, "Contractors and Subcontractors on Public Building or Public Work Financed in Whole or in Part by Loans or Grants from the United States"). The Act provides that each contractor or subrecipient shall be prohibited from inducing, by any means, any person employed in the construction, completion, or repair of public work, to give up any part of the compensation to

which he is otherwise entitled. The recipient shall report all suspected or reported violations to the Federal awarding agency.

20. Davis-Bacon Act, as amended ((40 U.S.C. 3141-3148)

GC-38 FEDERAL CLAUSES (con't.)

When required by Federal program legislation, all construction contracts awarded by the recipients and subrecipients of more than $2000 shall include a provision for compliance with the Davis-Bacon Act ((40 U.S.C. 3141-3148) and as supplemented by Department of Labor regulations (29 CFR part 5, "Labor Standards Provisions Applicable to Contracts Governing Federally Financed and Assisted Construction").

Under this Act, contractors shall be required to pay wages to laborers and mechanics at a rate not less than the minimum wages specified in a wage determination made by the Secretary of Labor. In addition, contractors shall be required to pay wages not less than once a week. The recipient shall place a copy of the current prevailing wage determination issued by the Department of Labor in each solicitation and the award of a contract shall be conditioned upon the acceptance of the wage determination. The recipient shall report all suspected or reported violations to the Federal awarding agency.

21. Contract Work Hours and Safety Standards Act (40 U.S.C. 3701-3708)

Where applicable, all contracts awarded by recipients in excess of $100,000 that involve the employment of mechanics or laborers shall include a provision for compliance with 40 U.S.C. 3702 and 3704, as supplemented by Department of Labor regulations (29 CFR part 5). Under 40 U.S.C. 3702 of the Act, each contractor shall be required to compute the wages of every mechanic and laborer on the basis of a standard work week of 40 hours. Work in excess of the standard work week is permissible provided that the worker is compensated at a rate of not less than 1 ½ times the basic rate of pay for all hours worked in excess of 40 hours in the work week. The requirements of 40 U.S.C. 3704 are applicable to construction work and provides that no laborer or mechanic shall be required to work in surroundings or under working conditions which are unsanitary, hazardous or dangerous. These requirements do not apply to the purchases of supplies or materials or articles ordinarily available on the open market, or contracts for transportation or transmission of intelligence.

22. Rights to Inventions Made Under a Contract or Agreement

Contracts or agreements for the performance of experimental, developmental, or research work shall provide for the rights of the Federal Government and the recipient in any resulting invention in accordance with 37 CFR part 401, "Rights to Inventions Made by Nonprofit Organizations and Small Business Firms Under Government Grants, Contracts and Cooperative Agreements," and any implementing regulations issued by the awarding agency.

23. Clean Air Act (42 U.S.C. 7401 et seq.) and the Federal Water Pollution Control Act (33 U.S.C. 1251 et seq.), as amended

Contracts and subgrants of amounts in excess of $150,000 shall contain a provision that requires the recipient to agree to comply with all applicable standards, orders or regulations issued pursuant to the Clean Air Act (42 U.S.C. 7401 et seq.) and the Federal Water Pollution Control Act as amended (33 U.S.C. 1251 et seq.). Violations shall be reported to the Federal awarding agency and the Regional Office of the Environmental Protection Agency (EPA).

24. Byrd Anti-Lobbying Amendment (31 U.S.C. 1352)

Contractors who apply or bid for an award of $100,000 or more shall file the required certification. Each tier certifies to the tier above that it will not and has not used Federal appropriated funds to pay any person or organization for influencing or attempting to influence an officer or employee of any agency, a member of Congress, officer or employee of Congress, or an employee of a member of Congress in connection with

obtaining any Federal contract, grant or any other award covered by 31 U.S.C. 1352. Each tier shall also disclose any lobbying with non-Federal funds that takes place in connection with obtaining any Federal award. Such disclosures are forwarded from tier to tier up to the recipient.

25. Debarment and Suspension (E.O.s 12549 and 12689)

No contract shall be made to parties listed on the General Services Administration's List of Parties Excluded from Federal Procurement or Nonprocurement Programs in accordance with E.O.s 12549 and 12689, "Debarment and Suspension." This list contains the names of parties debarred, suspended, or otherwise excluded by agencies, and contractors declared ineligible under statutory or regulatory authority other than E.O. 12549. Contractors with awards that exceed the small purchase threshold shall provide the required certification regarding its exclusion status and that of its principal employees.

26. Prohibition on Certain Telecommunications and Surveillance Equipment

Recipients and subrecipients are prohibited from using loan or grant funds to procure or obtain; extend or renew a contract to procure or obtain; or enter into a contract (or extend or renew a contract) to procure or obtain equipment, services, or systems that uses covered telecommunications equipment or services as a substantial or essential component of any system, or as critical technology as part of any system. As described in Public Law 115-232, section 889, covered telecommunications equipment is telecommunications equipment produced by Huawei Technologies Company or ZTE Corporation (or any subsidiary or affiliate of such entities), Hytera Communications Corporation, Hangzhou Hikvision Digital Technology Company, or Dahua Technology Company (or any subsidiary or affiliate of such entities), or by an entity that the Secretary of Defense, in consultation with the Director of the National Intelligence or the Director of the Federal Bureau of Investigation, reasonably believes to be an entity owned or controlled by, or otherwise connected to, the government of a covered foreign country.

GC-39 CONTRACT INTERPRETATION

Whenever the singular is used herein, the masculine, feminine and neuter gender shall be deemed to include the others. The headings of articles, paragraphs and sections in this Contract are included for convenience only and shall not be considered by either party in construing the meaning of this Contract. If any provision or clause of this Contract shall be held to be invalid, such provision or clause shall be deleted from the Contract and the Contract shall be construed to give effect to the remaining portions thereof.

This Contract shall be interpreted and construed based upon the following order of precedence of component parts. Such order of precedence shall govern to resolve all cases of conflict, ambiguity or inconsistency.

1. Addenda, if any.
2. Special Conditions
3. Specification.
4. General Conditions.
5. Instruction to Bidders.
6. Legal Advertisement.
7. Bid Proposal.

END OF SECTION

SPECIAL CONDITIONS

SC-01 SCOPE

The scope of this project is for the removal, repairs, and/or replacement of damaged and/or non-complaint sections of the existing steel plate beam guardrail, traffic barrier terminal, crash attenuators, etc. located in Cook County for the Department of Transportation and Highways all in accordance with the Contract Documents, Specifications and Proposal herein.

SC-02 CONTRACT PERIOD

The contract is effective for two (2) years from September 1, 2025 through August 31, 2027, with one, two-year renewal option effective after proper execution of the Contract Documents. The contract will consist of a firm price for 24 months.

The Contract may be renewed in writing by mutual agreement of the parties not less than thirty (30) days before its expiration.

SC-03 AWARD OF CONTRACT

The Contract shall be awarded to the lowest, responsible and responsive Bidder whose bid meets the requirements and criteria set forth in the Bid Documents. All items, unless otherwise stated, will be assumed to meet all specifications and requirements as set forth in the Bid Documents. Ambiguous bids which are uncertain as to terms, delivery, quantity, or compliance with specifications may be declared non-responsive and rejected. The County shall be the sole determinant of the relevant and appropriate cost factors used in evaluating any Base, Options and/or Alternate bids. Bidders must quote all lines for consideration. It is the intent of the County to award this bid as a whole and not in part. Only one award will result from this bid.

SC-04 MBE/WBE REQUIREMENTS FOR THIS CONTRACT

The Bidder shall have a subcontracting goal of not less than 0% percent MBE and 0% percent WBE of the awarded contract price for work to be performed.

The Bidder must comply with the County's MBE/WBE participation requirements. The County has issued MBE/WBE goals for this Bid. The Bidder shall submit with its Proposal, an MBE/WBE Utilization Plan indicating how it proposes to meet these goals. If the Bidder has not met the goals or made good faith efforts to meet the goals, the Bidder's response will be deemed nonresponsive and will not be considered for the award.

Certified MBE/WBE Bidders may count their own participation, however, a female firm certified as M/WBE or W/MBE may be counted towards the MBE or WBE goal, but not both. (Designations cannot be changed after submission of the compliance plan.)

Unless otherwise specified in the Bid Documents, for purposes of this contract, the contract amount is the total bid amount that has been entered on the Proposal Page of the Bid Documents.

SC-05 SERVICE LOCATION

The Cook County Department of Transportation and Highways maintains approximately 490 miles of highways. These 490 miles of highways are located in four maintenance Districts of Cook County Highway system. The existing guardrail and traffic barrier terminal are located at various locations throughout the County highway system. Various existing field conditions will be encountered when performing the work. No additional allowances will be granted because of existing field conditions.

SC-06 PRE-BID CONFERENCE – NOT APPLICABLE

SC-07 INQUIRIES

A copy of any written request for interpretation of documents shall be provided to the Office of the Chief Procurement Officer at the address set forth below.

Inquiries about the interpretation of the Specifications must be made only in writing and shall be directed to the Chief Procurement Officer. Inquiries will be answered in writing, if deemed necessary, by means of an Addendum issued by the Office of the Chief Procurement Officer. (Reference Instructions to Bidders, Section IB-05 “Exceptions and Addendum”, Page IB-3). **Inquiries must be received no later than 12:00 Noon on May 9, 2025**

During the bid process, all inquiries must be directed, via email communication, only to the Office of the Cook County Chief Procurement Officer as follows:

Contact Info for Contract Negotiator:- Kevin Fair @cookcoountyil.gov.

SC-08 BIDDER ACKNOWLEDGEMENT

By submitting this bid, the Bidder acknowledges that it has carefully examined all pages and documents contained within this solicitation, and that they have familiarized themselves with all terms and conditions therein. Further, the Bidder understands that by submitting this bid they waive all rights to plead any misunderstanding regarding said terms and conditions.
The Bidder also acknowledges all fees and charges necessary to provide the goods and/or services, including but not limited to shipping and delivery must be included in the Unit Price. Items will be ordered in various quantities on an “As Needed” basis.

Bidder further acknowledges they are to provide specific line-item pricing and extended pricing for this solicitation in the bid table located in Bonfire.

SC-09 NOTIFICATION

Do not begin performance on the Contract until notified by the Using Agency

SC-10 AVAILABILITY

The Contractor’s crew shall be available to perform guardrail and traffic barrier terminal repair throughout the period of this contract. The Engineer reserves the right to prioritize repair work locations.

SC-11 GENERAL PROVISIONS

All work and material shall conform to the latest editions of "Standard Specifications for Road and Bridge Construction"; "Manual on Uniform Traffic Control Devices for Streets and Highways" and the "Manual of Test Procedures for Materials" in effect on the date of invitation for bids, and the Supplemental Specifications and Special Provisions included herein. In case of conflict with any part or parts of said Specifications, the said Special Provisions shall take precedence and shall govern.

SC-12 WORK ORDER

The Engineer will issue a work order to the Contractor prior to the Contractor proceeding with any work on this contract. There is no guaranteed minimum or maximum amount per work order issuance, for this work is unpredictable.

No work, except for priority and emergency work, is to be performed by the Contractor without the issuance of a work order authorizing the work. A work order will show the class of work, date issued to

the Contractor, work order number, location, item description, and quantity of removals or repairs to be made.

Only the amount of replacement or repairs shown on the work order is to be done by the Contractor. If, at the time, repairs are being made, it is found that additional work is needed, prior approval must be obtained from the Engineer before such additional work is done. Any additional work done by the Contractor, without prior approval of the Engineer, will not be paid.

The Contractor shall contact the Engineer by telephone, no later than 3:30 PM the day before each workday to coordinate and obtain approval for daily work and submit a list of completed work from the prior workday. **The Contractor shall not revise the sequence of daily planned work without the Engineer's approval.** The Contractor shall contact the Engineer (on Monday through Friday), and at least 24 hours in advance of Saturday, Sunday or holiday work.

All work orders except priority and emergency work shall be issued by the Engineer to the Contractor by means of email or fax to the Contractor's representative as mutually agreed upon.

The Contractor must inspect in detail all work sites as specified in the work order to determine the correct required traffic control and protection obligations and necessary new material requirements before proceeding with the work. In advance of any repair, the contractor's supervisory personnel shall be knowledgeable of and fully able to direct their workforce to all work order locations.

After the work is completed, the Contractor shall initial and record the completion date on the work order, the work order will again be signed and dated when the work has been inspected and accepted. The Contractor will be given one copy of the work order for his/her records.

Priority work and emergency response work will be initiated by a verbal order from the Engineer. This verbal order will always be confirmed by a written work order. Regular work will be initiated by a written work order from the Engineer. Winter work will be initiated by a written work order from the Engineer.

SC-13 CLASSES OF WORK AND COMPLETION OF WORK

Priority Work

Priority work is defined as work that is required to correct a condition which is an immediate hazard to the public, designated by the Engineer to be an immediate hazard of such severity that life and/or property are potentially endangered, or is a pressing operational need to the Department of Transportation and first priority corrective action is required.

The location of the guardrail and appurtenances to be repaired as priority work shall be determined by the Engineer and may be required at any time between the starting date and the completion date.

The Contractor shall schedule his/her work in order to complete a Priority Work Order within seven (7) calendar days after the date issued.

Regular Work

Regular work is defined as work that involves those situations where the amount or nature of the damage does not pose an immediate hazard to the public. Work of this type shall generally be grouped by locations for efficiency of repair.
The Contractor shall schedule his/her operation in order to complete a Regular Work Order within twenty-one (21) calendar days after the date issued.

Winter Work

Winter work is defined as regular work issued between the dates of December 1 and February 28,

inclusive.

Winter work shall require the Contract to remove snow and ice at the repair site prior to repair. Additional equipment may also be required to repair the damaged location due to the frozen ground. This work will not be paid for separately but shall be considered part of the repair work and no additional compensation will be provided.

The Contractor shall schedule his/her operation in order to complete a Winter Work Order within twenty-eight (28) calendar days after the date issued.

SC-14 CALENDAR DAYS

A calendar day is every day shown on the calendar and starts at 12:00 midnight and ends at the following 12:00 midnight, twenty-four (24) hours later.

A calendar day will be charged for every day shown on the calendar except as follows:

When the temperature or wind chill factor, as officially reported by the United States Weather Bureau at Chicago O'Hare Field, reaches zero degrees Fahrenheit or below during any portion of that day.

When weather conditions, emergency conditions and/or unforeseen highway operational reasons prevent shoulder or lane closures required for the work.

When the Contractor requests and is denied approval from the Engineer.

During any legal holiday period as defined Article 107.09 of the Illinois Department of Transportation Standard Specifications for Road and Bridge Construction.

The Contractor shall petition the Engineer in writing within 48 hours for each non-chargeable calendar day request. Failure to petition in time shall be just cause to deny the petition. Approval of non-chargeable calendar day requests shall be by the sole determination of the Engineer.
FAILURE TO COMPLETE A WORK ORDER ON TIME

SC-15 LIQUIDATED DAMAGES

Time is of the essence to the contract. Should the Contractor fail to complete a work order within the calendar days stipulated in the contract, the Contractor shall be liable and shall pay to the County the amount of $100 per day, not as a penalty but as liquidated damages, for each day of overrun in the completion of a work order. The liquidated damages for failure to complete a work order on time are approximate, due to the impracticality of calculating and proving actual delay costs. This deduction amount establishes the cost of delay to account for administration, engineering, inspection, and supervision during periods of extended and delayed performance. The costs of delay represented by this amount are understood to be a fair and reasonable estimate of the costs that will be borne by the County during extended and delayed performance by the Contractor of the work, remaining incidental work, correction of work improperly completed, or repair of work damaged as a result of the Contractor.

The liquidated damage amount specified will accrue and be assessed from the final day of allowed completion time for the work order as detailed in the contract special provisions until final completion of the work order. The County will deduct these liquidated damages from any monies due or to become due to the Contractor from the County. The daily charge will be made for every day shown on the calendar beyond the specified allowed time for completion of the work order.

Liquidated damages for emergency repairs for which the contractor does not respond to, will be assessed from the date the emergency repair was initiated by the Engineer until final completion of the emergency repair. The County will deduct these liquidated damages from any monies due or to become due to the

Contractor from the County. The daily charge will be made for every day shown on the calendar from the date of the initiation of the emergency repair by the Engineer to the date of the completion of the emergency repair by the Contractor.

SC-16 CLEARING

The Contractor is hereby informed and shall understand that at some locations of repairs built up earth and/or debris, water, ice, snow, shrubs, brush, branches, tree limbs, weeds and other vegetation may be encountered that must be removed in order to make the necessary repairs. The clearing of these obstructions as well as any equipment and labor required to deal with existing water regardless of depth shall be considered included as part of the contract and no additional compensation provided. All work shall be done in a neat and workmanlike manner and to the satisfaction of the Engineer.

SC-17 CONTROL OF WORK

The Contractor shall provide in writing the names and phone numbers of a minimum of two of his representatives who can be contacted.

The Engineer shall furnish the Contractor with the names of representatives of the Department who will be available to confer with or to advise the Contractor in administrative and technical matters.

SC-18 INSPECTION OF WORK

The Engineer shall have the opportunity to inspect the repair operations as they are being performed. The Contractor shall notify the Engineer prior to starting repair operations each day via email. This will also allow the Engineer to approve payment for the repairs in a timely manner. If during the inspection wrong size, type, missing or improper hardware any damage to existing guardrail, traffic barrier terminal is found; the non-conforming work shall be corrected immediately to the satisfaction of the Engineer. Any work not designated for repair/replace by the Engineer and is required as a result of the Contractor's operations shall be repaired by the Contractor at his expense. This shall include galvanizing, repainting, replacement of hardware, and restoration of the shoulder under or around the repair. All corrective measures will be at no additional cost to County.

A digital photo of before work begins and after completion of work shall be emailed to the Engineer. The digital photo should contain the date and time it was taken. This work is incidental to the Contract.

SC-19 MATERIAL CERTIFICATION AND INSPECTION

The successful bidder shall provide a certification that the materials furnished meet all requirements of the specifications.

The Engineer shall be permitted to sample, inspect or test the items of this contract at any time to ensure conformance with specifications.

The Contractor shall provide the Cook County Department of Transportation and Highways with the manufacturer's written field performance warranty. The Contractor shall satisfy all the manufacturer's requirements so that should the material become unsatisfactory for its use within the warranty period, the manufacturer will replace/ restore to its original effectiveness at no cost to County.

SC-20 REPAIR SITE CONDITION

The Contractor is hereby informed and shall understand that at some locations of repairs built up earth and/or debris, water, ice, snow, shrubs, brush, branches, tree limbs, weeds and other vegetation may be encountered that must be removed in order to make the necessary repairs. The clearing of these obstructions as well as any equipment and labor required to deal with existing water regardless of

depth shall be considered included as part of the contract and no additional compensation provided. All work shall be done in a neat and workmanlike manner and to the satisfaction of the Engineer.

SC-21 TRAFFIC CONTROL AND PROTECTION

The Contractor shall arrange their work in such a manner to keep interruptions to traffic to a minimum. Traffic control and protection shall conform to Section 107.14 and Section 701 of the Standard Specifications for Road and Bridge Construction and to the latest revisions to the standards that are applicable. Conformance to these traffic control and protection standards will not be paid for as a separate item but will be considered incidental to the various contract items and no additional compensation will be allowed.

SC-22 REIMBURSEMENT FROM THIRD PARTY FOR REPAIRS OR DAMAGES

The County reserves the right to make recovery from third Party or Parties for damage to any part of the existing installations and no part of such recovery or recoveries shall inure to the benefit of the Contractor.

To enable the County to assess damages against said Third Party or Parties, the Contractor shall, upon request, furnish the Engineer an itemized statement of the cost of any repairs to Third Party damage, separating the cost of labor, materials and equipment.

SC-23 INVOICE

The Contractor shall submit an invoice for work performed with a filled-out Cook County Government Voucher Form (form 29A) to the Bureau of Maintenance. The mailing address is as follows:

Cook County Department of Transportation and Highways
Maintenance Bureau
8900 W 135th St
Orland Park, IL 60462

Attn: Accounts Payable

SC-24 STEEL COST ADJUSTMENTS FOR RENEWAL OPTIONS (See Exhibit XI)

If the County renews this Contract and if the bidder submits and check off “yes” in the “Option for Guardrail Maintenance **Steel** Cost Adjustment” form, the unit price for **all steel items** shall be adjusted based on attached “**STEEL**S COST ADJUSTMENTS (BDE)” formula under Exhibit XI.

If the bidder fails to submit the attached under Exhibit XI “Guardrail Maintenance Steel Cost Adjustment Form”, or fails to fill out the form completely, or check “No” under the Contractor’s option, then the base year unit prices remain through the option year(s).

SC-25 IDOT PREQUALIFICATION

Bidder shall be listed on ‘Prequalified Contractor Listing’ compiled February 10, 2025, by Illinois Department of transportation with approval for ‘Category 23 – Guardrail’ as per 44 IL. ADM. Code Section 650. Appendix A, Available Work Categories.

SPECIFICATIONS

GENERAL PROVISIONS

All work and material shall conform to the latest editions of "Standard Specifications for Road and Bridge Construction"; "Manual on Uniform Traffic Control Devices for Streets and Highways" and the "Manual of Test Procedures for Materials", the testing criteria contained in the American Association of State Highways and Transportation Official (AASHTO) Manual for Assessing Safety Hardware (MASH) in effect on the date of invitation for bids, and the Supplemental Specifications and Special Provisions included herein. In case of conflict with any part or parts of said Specifications, the said Special Provisions shall take precedence and shall govern.

SPECIAL PROVISIONS

TRAFFIC BARRIER TERMINAL, TYPE 1 (SPECIAL)

This work shall consist of furnishing and installing Traffic Barrier Terminal, Type 1 (Special) of the type specified by the Engineer according to Section 631 and the following:

The terminal shall be installed according to the manufacturer's specifications and shall include all necessary transitions between the terminal and the item to which it is attached.

The terminals shall follow the manufacturer's specifications for installation as to type and number of posts, foundation tubes, and soil plates.

The terminal section shall provide a minimum length of need of 37.5 ft.

Included in this item is the complete removal of an existing damaged or undamaged terminal section having a length of approximately fifty (50) feet. All posts, rail element plates and related components of the existing terminal section, including the steel end post, shall be removed. The existing steel end post encountered may be set in a concrete anchor or may have been driven according to the alternate requirements permissible at the time of the guardrail installation. In the event a concrete anchor is encountered, said concrete anchor shall be completely removed. After the concrete anchor is removed, the remaining hole shall be filled with sand or other suitable material approved by the Engineer.

Also included in this item is the complete removal of an existing damaged or undamaged Traffic Barrier Terminal Type 1, Traffic Barrier Type 1A, Traffic Barrier Terminal Type 1 (Special) and any guardrail necessary to accommodate the new Traffic Barrier Terminal Type 1 (Special). The Engineer will make this determination and inform the Contractor prior to commencing repairs. All old posts shall be removed, and the remaining holes shall be filled with sand or other suitable material approved by the Engineer

The Contractor shall adjust and realign existing rail element plates and posts adjacent to the new traffic barrier terminal, as directed by the Engineer. Unbolting, bolting, adjusting, realigning, guardrail removal, or any other work necessary to accomplish the desired realignment shall be included in the contract unit bid price for the pay items involved.

This item shall also include the furnishing and installing of a Direct Applied Terminal Marker which shall comply with the applicable portions of the contract special provision for "Guardrail and Barrier Wall Delineation" and as shown in the plans and shall be included in the contract unit bid price for the pay items involved.

Basis of Payment: This work shall be paid for at the contract unit price per each for TRAFFIC BARRIER TERMINAL, TYPE 1 (SPECIAL) TANGENT or at the contract unit price per each for TRAFFIC BARRIER TERMINAL, TYPE 1 (SPECIAL) FLARED.

When concrete is encountered poured around terminal posts, any additional work required in removing existing posts or installing new ones shall be paid for by using the item “Steel Posts, Special” as described elsewhere in these special provisions and as specified by the Engineer.

REPAIR TRAFFIC BARRIER TERMINAL, TYPE 1 (SPECIAL)

This work consists of removing and replacing all damaged components from the approach nose of the terminal, up to and including the second post and the first 25 feet of rail element plate according to the Standard Specifications and at the locations as specified by the Engineer.

The Contractor shall adjust and realign existing rail element plates and posts adjacent to or within the traffic barrier terminal repair, as directed by the Engineer. Unbolting, bolting, adjusting, realigning, excavating, filling post holes or any other work necessary to accomplish the desired realignment shall be included in the contract unit bid price for the pay items involved.

This item shall also include the furnishing and installing of a Direct Applied Terminal Marker, if needed, which shall comply with the applicable portions of the contract special provision for “Guardrail and Barrier Wall Delineation” and the plans and shall be included in the contract unit bid price for the pay items involved.

The entire 25' rail element plate shall be replaced when an existing rail element plate is damaged. Replacement of the 25' rail element plate shall be considered included in the cost of this item. Also included in the cost of this item are cable assemblies and all other hardware.

Basis of Payment: This work will be paid for at the contract unit price per each for REPAIR TRAFFIC BARRIER TERMINAL, TYPE 1 (SPECIAL).

When concrete is encountered poured around terminal posts, any additional work required in removing existing posts or installing new ones shall be paid for by using the item “Steel Posts, Special” as described elsewhere in these special provisions and as specified by the Engineer.

TRAFFIC BARRIER TERMINAL, TYPE 1

This work consists of furnishing and installing all new component parts for Traffic Barrier Terminal, Type 1 according to of the Standard Specifications, and all of the requirements of the standards, at the locations as specified by the Engineer. It shall also include a radius installation.

Included in this item is the complete removal of an existing damaged or undamaged terminal section having a length of approximately twenty-five (25) feet. All posts, rail element plates and related components of the existing terminal section, including the steel end post, shall be removed. The existing steel end post encountered may be set in a concrete anchor or may have been driven according to the alternate requirements permissible at the time of the guardrail installation. In the event a concrete anchor is encountered, said concrete anchor shall be completely removed. After the concrete anchor is removed, the remaining hole shall be filled with sand or other suitable material approved by the Engineer.

Also included in this item is the complete removal of an existing damaged Traffic Barrier Terminal, Type 1. The Engineer will make this determination and inform the Contractor prior to commencing repairs.

The Contractor shall adjust and realign existing rail element plates and posts adjacent to the new traffic barrier terminal, as directed by the Engineer. Unbolting, bolting, adjusting, realigning, or any other work necessary to accomplish the desired realignment shall be included in the contract unit bid price for the pay items involved.

SPECIFICATIONS

Basis of Payment: This work shall be paid for at the contract unit price per each for TRAFFIC BARRIER TERMINAL, TYPE 1.

When concrete is encountered poured around terminal posts, any additional work required in removing existing posts or installing new ones shall be paid for by using the item “Steel Posts, Special” as described elsewhere in these special provisions and as specified by the Engineer.

TRAFFIC BARRIER TERMINAL, TYPE 1 NOSE ASSEMBLY

This work consists of removing and disposing of the damaged nose piece and related hardware holding it in place and installing a new nose as directed by the Engineer.

This item shall also include the furnishing and installing of a Direct Applied Terminal Marker which shall comply with the applicable portions of the contract special provision for “Guardrail and Barrier Wall Delineation” and the plans.

Basis of Payment: This work will be paid for at contract unit price per each for TRAFFIC BARRIER TERMINAL TYPE 1, NOSE ASSEMBLY.

TRAFFIC BARRIER TERMINAL, TYPE 2

This work consists of furnishing and installing all new component parts for Traffic Barrier Terminal, Type 2 according to of the Standard Specifications, and all of the requirements of the standards, at the locations as specified by the Engineer. It shall also include a radius installation.

Included in this item is the complete removal of an existing damaged or undamaged terminal section as per as per standard drawings included. All posts, rail element plates and related components of the existing terminal section, including the steel end posts shall be removed. The existing steel end post encountered may be set in a concrete anchor or may have been driven according to the alternate requirements permissible at the time of the guardrail installation. In the event a concrete anchor is encountered, said concrete anchor shall be completely removed. After the concrete anchor is removed, the remaining hole shall be filled with sand or other suitable material approved by the Engineer.

Also included in this item is the complete removal of an existing damaged Traffic Barrier Terminal, Type 2. The Engineer will make this determination and inform the Contractor prior to commencing repairs.

The Contractor shall adjust and realign existing rail element plates and posts adjacent to the new traffic barrier terminal, as directed by the Engineer. Unbolting, bolting, adjusting, realigning, or any other work necessary to accomplish the desired realignment shall be included in the contract unit bid price for the pay items involved.

Basis of Payment: This work shall be paid for at the contract unit price per each for TRAFFIC BARRIER TERMINAL, TYPE 2.

When concrete is encountered poured around terminal posts, any additional work required in removing existing posts or installing new ones shall be paid for by using the item “Steel Posts, Special” as described elsewhere in these special provisions and as specified by the Engineer.

TRAFFIC BARRIER TERMINAL TYPE 5 AND 6

This work consists of furnishing and installing all new component parts for Traffic Barrier Terminal Type 6 according to the Standard Specifications, and all of the requirements of the Standards at the locations as specified by the Engineer.

Also included in this item is the complete removal of an existing damaged or undamaged sub- standard, Traffic Barrier Terminal Type 5, Type 6 or Type 6a and whatever else may be existing. The Engineer will make this determination and inform the Contractor before commencing repairs. All posts, rail element plates and related components of the existing terminal section, as well as any length of the guardrail types needed to accommodate the new Traffic Barrier Type 5 or 6 shall be removed. Included in this item are all shims and blocks required by the Engineer to facilitate proper attachment to structure walls.

The Contractor shall adjust and realign existing rail element plates and posts adjacent to the new traffic barrier terminal, as directed by the Engineer. Unbolting, bolting, adjusting, realigning, guardrail removal, or any other work necessary to accomplish the desired realignment shall be included in the contract unit bid price for the pay items involved. This work shall also include any nonstandard sized or shaped blocks or hardware required to fit existing conditions.
The furnishing and installing of transition plates (Thrie-Beam to “W” Section) and all necessary hardware will not be paid for separately but shall be included in the cost of “Thrie-Beam Guardrail Element Plates”.

Basis of Payment: This work will be paid for at the contract unit price per each for TRAFFIC BARRIER TERMINAL TYPE 5, TRAFFIC BARRIER TERMINAL TYPE 6, or TRAFFIC BARRIER TERMINAL TYPE 6a.

THRIE-BEAM GUARDRAIL ELEMENT PLATE

This work consists of removing damaged Thrie-Beam Guardrail Element Plates, including all associated hardware, and furnishing and installing new Thrie-Beam Guardrail Element Plates, including all necessary hardware and metal block-outs according to the details as shown on the plans and as directed by the Engineer.

The Contractor shall adjust and realign guardrail element plates adjacent to guardrail elements removed and replaced as directed by the Engineer. Unbolting, bolting, adjusting, realigning or any other work necessary to accomplish the desired realignment shall be included in the contract unit bid price for the pay items involved.

The furnishing and installing of transition plates (Thrie-Beam to "W" Section) and all necessary hardware will not be paid for separately but shall be included in the cost of "Thrie-Beam Guardrail Element Plates".

The furnishing and installing of all bolts, nuts, washers and other hardware necessary to comply with the Special Provision for Removal and Repair of Guardrail, will not be paid for separately, but shall be included in the contract unit bid price for the pay items involved.

Method of Measurement: In order to clarify measurement and payment for work, the standard length of thrie-beam guardrail element plates shall be considered to be 12'-6". In the event existing damaged guardrail element plates to be removed and replaced measures 25 feet in length, they shall be considered as two (2) guardrail element plates of standard 12'-6" length.

Basis of Payment: This work shall be paid for at the contract unit price per each for THRIE-BEAM

GUARDRAIL ELEMENT PLATES, which price shall include realigning adjacent guardrail element plates and/or posts and all associated hardware as specified by the Engineer.

THRIE-BEAM GUARDRAIL RADIUS ELEMENT PLATE

This work consists of removing all sections of damaged thrie beam guardrail radius plates including all associated hardware, and furnishing and installing new 12-gauge guardrail curved elements including all necessary hardware where directed by the Engineer. Plates, nuts, bolts, washers and other hardware shall be galvanized and shall match the original and adjacent installation as to type and design.

The Contractor shall adjust and realign existing rail element plates adjacent to rail elements removed and replaced as directed by the Engineer. Unbolting, bolting, adjusting, realigning or any other work necessary to accomplish the desired realignment shall be included in the contract unit bid price for the pay items involved.

The furnishing and installing of all bolts, nuts, washers and other hardware necessary to comply with the Special Provision for Removal and Repair of Guardrail, will not be paid for separately, but shall be included in the contract unit bid price for the pay items involved.

The guardrail element plates will be factory fabricated to the radius of curvature necessary to match the existing guardrail configuration or as specified by the Engineer.

In order to clarify measurement and payment for work, the standard length of radial rail element plate shall be considered to be 12'-6". In the event existing damaged rail element plates to be removed and replaced measures 25 feet in length, they shall be considered as two (2) rail element plates of standard 12'-6". If any portion of a standard 12'-6" rail element plate is factory fabricated to a radial shape the rail element plate shall be paid as one Thrie-Beam Radius Element Plate each.

Basis of Payment: This work shall be paid for at the contract unit price per each for THRIE BEAM RADIUS ELEMENT PLATES.

THRIE-BEAM MODIFIED BLOCK

This work consists of removing a damaged block which is being replaced, unbolting the thrie- beam rail connecting end section, including thrie-beam rail element or elements, and furnishing and installing a new thrie-beam modified block. The new block shall be as shown in the plans.

All nuts, bolts, washers, and other hardware required shall be included and shall be included in the contract unit bid price for the pay items involved.

Basis of Payment: This work shall be paid for at the contract unit price per each for THRIE-BEAM MODIFIED BLOCKS.

THRIE-BEAM POST

This work consists of removing the damaged guardrail posts (6'-9" or 7'-6" in length) and replacement with new W6 X 9 or W6 X 8.5 or "C" shape steel posts, whichever length conforms with the present installation of thrie-beam faced steel plate beam guardrail being repaired and according to the standards shown.

The 7'-6" long posts are designed for use at the top of slopes steeper than 3:1 and where single or double beams and channels are to be mounted 2'-6-1/2" above ground level, as measured to the top of the

rail.

New steel posts shall be galvanized to match the existing installation. All work shall conform to applicable standards and as directed by the Engineer.

Basis of Payment: This work shall be paid for at the contract unit price per each for THRIE-BEAM POSTS.

RAIL ELEMENT PLATES

This work consists of removing all sections of damaged rail element plates, including all associated hardware, and furnishing and installing new guardrail elements, including all necessary hardware, where directed by the Engineer. Plates, nuts, bolts, washers and other hardware shall be galvanized and shall match the original and adjacent installation as to type and design.

The Contractor shall adjust and realign existing rail element plates adjacent to rail elements removed and replaced as directed by the Engineer. Unbolting, bolting, adjusting, realigning or any other work necessary to accomplish the desired realignment shall be considered included with "Rail Element Plates".

The furnishing and installing of all bolts, nuts, washers and other hardware necessary to comply with the Special Provision for Removal and Repair of Guardrail, will not be paid for separately, but shall be included in the contract unit bid price for the pay items involved.

Method of Measurement: In order to clarify measurement and payment for work, the standard length of rail element plate shall be considered to be 12'-6". In the event existing damaged rail element plates to be removed and replaced measures 25 feet in length, they shall be considered as two (2) rail element plates of standard 12'-6" length.

Basis of Payment: This work shall be paid for at the contract unit price per each for RAIL ELEMENT PLATES.

RAIL ELEMENT PLATES (RADIUS)

This work consists of removing all sections of damaged rail element plates including all associated hardware and furnishing and installing new guardrail curved elements including all necessary hardware where directed by the Engineer. Plates, nuts, bolts, washers and other hardware shall be galvanized and shall match the original and adjacent installation as to type and design.

The Contractor shall adjust and realign existing rail element plates adjacent to rail elements removed and replaced as directed by the Engineer. Unbolting, bolting, adjusting, realigning or any other work necessary to accomplish the desired realignment shall be included in the contract unit bid price for "Radius Rail Element Plates".

The furnishing and installing of all bolts, nuts, washers and other hardware necessary to comply with the Special Provision for Removal and Repair of Guardrail, will not be paid for separately, but shall be considered included in the contract unit bid price for the pay items involved.

The guardrail element plates will be factory fabricated to the radius of curvature necessary to match the existing guardrail configuration or as specified by the Engineer.

Method of Measurement: In order to clarify measurement and payment for work, the standard length of radial rail element plate shall be considered to be 12'-6". In the event existing damaged rail element plates to be removed and replaced measures 25 feet in length, they shall be considered as two (2) rail element plates of standard 12'-6".

If any portion of a standard 12'-6" rail element plate is factory fabricated to a radial shape the rail

element plate shall be paid as one Radius Element Plate each.

Basis of Payment: This work shall be paid for at the contract unit price per each for RADIUS RAIL ELEMENT PLATES (RADIUS).

SPLICE PLATE 12"

This work consists of removing damaged splice plates (Plate "A", Standard 630001), furnishing and installing new splice plates and all nuts, bolts and hardware necessary thereto as directed by the Engineer.

The splice plates will not be paid for separately but shall be included in the contract unit bid price for "Rail Element Plates".

GUARDRAIL BLOCKS

This work consists of removing and replacing existing damaged guardrail block-outs including unbolting and re-bolting rail elements, including thrie- beam rail elements, bolts, nuts, washers and other accessories to be replaced.

Replacement block-outs shall be the same dimensions as the existing damaged block-outs and shall conform to the details and standards included in the plans.

The guardrail block-outs used as replacements at locations of Guardrail Blocks shall be un-tapered block-outs as shown in the detail included in the plans.

Basis of Payment: This work shall be paid for at the contract unit price per each for GUARDRAIL BLOCKS.

STEEL POSTS

This work consists of removing the damaged guardrail posts (6'-9" or 7'-6" in length) and replacement with new W6 X 9 or W6 X 8.5 or "C" shape steel posts, whichever length conforms with the present installation of single, thrie-beam or double faced steel plate beam guardrail being repaired and according to the standards shown.

The 7'-6" long posts are designed for use at the top of slopes steeper than 3:1 and where single or double beams and channels are to be mounted 2'-6-1/2" above ground level, as measured to the top of the rail.

New steel posts shall be galvanized to match the existing installation. All work shall conform to applicable standards and as directed by the Engineer. Also, included in this item is any and all hand digging that may be necessary due to (but not limited to), buried utility proximity, and also the coring of an appropriate size hole through Portland Cement Concrete (but not limited to), HMA or other hard finished surface.

Basis of Payment: This work shall be paid for at the contract unit price per each for STEEL POSTS.

STEEL POSTS MODIFIED

This work consists of removing the post which is to be replaced, unbolting the rail elements, and furnishing and setting a new post. The replacement posts, 4" X 6" WF steel with welded base plate, shall conform to the length, size and type of the original installation of single or double faced steel plate beam guardrail. Posts mounted on an existing culvert shall be replaced according to the applicable portions of Standard 630101 or as directed by the Engineer. Sheared bolts shall be replaced in kind. Replacement of sheared bolts, concrete work around the bolts, and any culvert cover fill removal and replacement will not be paid for separately but shall be considered included with the contract unit price for furnishing and setting steel posts, modified. New steel posts and base plates shall be galvanized after fabrication and shall match the configuration of the existing installation.

This work shall also include attaching posts to culvert head walls, decks, or retaining walls and shall include any and all port sizes, attachment configurations, methods, or hardware which may be necessary to conform to existing conditions and wall shapes.

Basis of Payment: This work shall be paid for at the contract unit price per each for STEEL POSTS, MODIFIED.

STEEL POSTS SPECIAL

This work consists of removing posts set in concrete, unbolting the rail elements, and furnishing and setting a new post in Portland Cement Concrete.

Where existing damaged posts are set in concrete the Contractor shall remove the damaged post and concrete, dig or auger a new hole twelve (12) inches in diameter, thirty (30) inches deep, and set a new W6 X 9 or W6 X 8.5 or "C" Shaped Steel post of the same length as that removed in concrete on the same alignment and at the proper height to coincide with the adjacent and adjoining guardrail. New steel posts shall match the existing installation.

Where existing damaged posts are not set in concrete and are shorter than the length specified in the appropriate standard due to impervious material or underground utilities encountered, the new steel posts shall be set in concrete according to the details as shown in Standard 630001 and at the proper height to coincide with the adjacent guardrail. New steel posts shall match the existing installation.

Basis of Payment: This work shall be paid for at the contract unit price per each for STEEL POSTS, SPECIAL.

WOOD POST

This work consists of removing damaged wood guardrail posts, as part of Long-Span Guardrail installations, and replacement with new posts as shown in Standard 630106. New wood posts shall match the existing installation.

Basis of Payment: This work shall be paid for at the contract unit price each for WOOD POSTS.

REMOVE AND RESET POSTS

This work consists of unbolting and removing guardrail element pates, removing and resetting existing undamaged steel plate beam guardrail posts to the proper alignment and elevation, including excavating and backfilling post holes and refastening all removed guardrail element plates, all according to the applicable Standard Specifications and as directed by the Engineer.

If guardrail element plates need replacement with new one, they will be paid under appropriate pay items in this contract.

Basis of Payment: This work shall be paid for at the contract unit price per each for REMOVING AND RESETTING POSTS.

SINGLE END SECTION

This work consists of removing damaged single end sections along with all nuts, bolts, washers and other hardware connected with the damaged single end sections as directed by the Engineer and furnishing and installing new 12-gauge end sections of end shoes, all nuts, bolts, washers and other hardware necessary for the installation of the single end sections on single element guardrail. The end sections are to match the existing and adjacent guardrail as to type and design and are to be galvanized to conform to the original and adjacent installation. Refer to Standard 630001.

The furnishing and installing of all bolts, nuts, washers and other hardware necessary to comply with the Special Provision for Removal and Repair of Guardrail, will not be paid for separately, but shall be included in the contract unit bid price for the pay items involved.

Basis of Payment: This work shall be paid for at the contract unit price per each for SINGLE END SECTION.

CONNECTING END SECTION

This work consists of removing damaged end sections and furnishing and installing new end sections that are connected to an existing concrete structure or steel railing. Replacing anchor bolts and concrete repairs when required, and all nuts, bolts, washers and other hardware, will be included with this item. Other components such as posts and rail elements at the work location, if damaged, will be replaced and paid for according to the provisions in this contract for similar items. All work and material will be in conformity with applicable plans and specifications in this contract.

Thrie-beam connecting end section attached to a concrete structure or steel railing is also included in this item and basis of payment shall be in accordance with this special provision.

Basis of Payment: This work will be paid for at the contract unit price per each for CONNECTING END SECTION.

MISSING/FAILED ANCHOR CABLES

This work consists of furnishing and installing all new anchor cables and hardware for a traffic barrier terminal according to of the Standard Specifications, and all of the requirements of the standards, at the locations as specified by the Engineer.

Included in this item is the complete removal of an existing damaged or undamaged anchor cable and hardware and disposal.

The Contractor shall adjust and realign existing rail element plates and posts, unbolting, bolting, adjusting, realigning, or any other work necessary to accomplish the desired realignment shall be included in the contract unit bid price for the pay items involved.

Basis of Payment: This work will be paid at the contract unit price per each for MISSING/FAILED ACCHOR CABLE REPLACED. The unit price shall include all equipment, labor and materials necessary.

MISSING/FAILED LAG BOLTS

This work consists of furnishing and installing all new lag bolts for a traffic barrier terminal according to of the Standard Specifications, and all of the requirements of the standards, at the locations as specified by the Engineer.

Included in this item is the complete removal of an existing damaged or undamaged lag bolts and hardware and disposal.

The Contractor shall adjust and realign existing rail element plates and posts, unbolting, bolting, adjusting, realigning, or any other work necessary to accomplish the desired realignment shall be included in the contract unit bid price for the pay items involved.

Basis of Payment: This work will be paid at the contract unit price per each for MISSING/FAILED LAG BOLTS REPLACED. The unit price shall include all equipment, labor and materials necessary.

CURB REMOVAL (PARTIAL)

Included in this work is all related transitional work, grading, shoulder widening, roadside turf restoration and any other work required in advance of and adjacent to traffic barrier terminals to be repaired to comply with all details and standards in the plans.

This work shall consist of the partial depth removal of the existing concrete curb to an elevation 1-1/2 inches above the existing gutter flowline where the existing curb and gutter in advance of and adjacent to the guardrail terminal section repair location has a curb height greater than two (2) inches. This work shall be done according to the applicable portions of Section 440 and according to the details and standards in the plans, at locations for "Traffic Barrier Terminal, Type 1 (Special)", and for "Repair Traffic Barrier Terminal Type 1 Special", and as directed by the Engineer.

The Contractor shall remove the top portion of the existing curb in a manner which will provide a smooth straight line by using a self-propelled cold milling process, a concrete sawing process, or a process approved by the Engineer, and shall have an effective means of preventing dust from escaping into the air.

Any curb and gutter damaged by the Contractor's operations shall be replaced at the Contractor's expense.

Basis of Payment: This work will be paid for at the contract unit price per each foot for CURB REMOVAL (PARTIAL).

Traffic barrier terminals shall be repaired according to the details and standards in the plans. Curb removal and all related work in advance of and adjacent to traffic barrier terminals to be repaired that is required to comply with all applicable sections of the standard specifications, the details and standards in the plans shall be paid for as CURB REMOVAL (PARTIAL).

BACK SIDE PROTECTION OF GUARDRAIL

This work shall consist of installing back side protection of guardrail of the specified type and size in the IDOT Standard drawing 630116 at the locations shown on the plans or as directed by the Engineer.

Method of Measurement: Back side protection of guardrail shall be measured for payment per foot unit furnished and installed. Each unit includes furnishing and installing the treated timber, bolts, washers, and accessories required by the back side protection of guardrail specified in the plans.

Basis of Payment: This work will be paid for at the contract unit price per foot for BACK SIDE PROTECTION OF GUARDRAIL.

HOT-MIX ASPHALT SHOULDER 8”

This work shall consist of installing Hot-Mix asphalt Shoulder 8” for stabilizing guardrail at the locations as directed by the Engineer for new guardrail installation.
This work shall include all material, equipment and labor required for preparing ground base, installing bituminous shoulder 8” in layers and compacting as directed by the engineer.

Basis of Payment: This work will be paid for at the contract unit price per Square Yard of Hot-Mix Asphalt Shoulder 8” installed

CRASH ATTENUATOR- QUADGUARD THREE BAY SYSTEM FOR WIDE HAZARDS

This work shall consist of furnishing and installing Crash Attenuator - Quad guard Three Bay System for Wide Hazards of the type specified by the Engineer and the following:

SPECIFICATIONS

The Quad guard Three Bay System shall be installed according to the manufacturer's specifications and plans contained herewith and shall include all necessary hardware. Included in this item is the complete removal of an existing damaged or undamaged Crash Attenuator and related components of the existing system. In the event a concrete anchor is encountered, said concrete anchor shall be completely removed. After the concrete anchor is removed, the remaining hole shall be filled by suitable material approved by the Engineer.

The Contractor shall adjust and realign as directed by the Engineer. Unbolting, bolting, adjusting, realigning, removal, or any other work necessary to accomplish the desired alignment shall be included in the contract unit bid price for the pay item.

Basis of Payment: This work shall be paid for at the contract unit price per each for CRASH ATTNUATOR-QUAD GUARD THREE BAY SYSTEM FOR WIDE HAZARDS.

CRASH ATTENUATOR- NOSE ASSEMBLY

This work shall consist of furnishing and installing Crash Attenuator – Nose assembly (for Quad-guard Three Bay System for Wide Hazards) of the type specified by the Engineer and the following:

The Nose Assembly shall be installed according to the manufacturer's specifications and plans contained herewith and shall include all necessary hardware. Included in this item is the complete removal of an existing damaged or undamaged Nose Assembly and related components of the existing system.

The Contractor shall adjust and realign as directed by the Engineer. Unbolting, bolting, adjusting, realigning, removal, or any other work necessary to accomplish the desired alignment shall be included in the contract unit bid price for the pay item.

Basis of Payment: This work shall be paid for at the contract unit price per each for CRASH ATTNUATOR-NOSE ASSEMBLY.

EMERGENCY RESPONSE

This work consists of responding to remove hazard to public from damaged guardrail and install proper warning devices within 4 hours of notification from the Engineer

For emergency response, the Contractor shall furnish the names and telephone numbers of two individuals (one primary contact and one secondary contact) in the Contractor’s direct employ who is to be responsible, 24 hours-a-day, to receive and coordinate emergency service requests.

Emergency Response which is initiated by the Engineer shall be paid as unit price per each Emergency Response requested in addition to work required to fix the damaged guardrail, which will be paid under separate contract pay items contained herein.

Basis of Payment: This work will be paid at the contract unit price per each for EMERGENCY RESPONSE, which price shall include all equipment, labor and materials necessary to perform this work.

EXPLORATION TRENCH (SPECIAL)

Description: This work shall consist of constructing a trench for the purpose of verifying clearances and locations of existing farm underdrains and utilities. The exploration trench shall be constructed at the locations directed by the Engineer. Included in this item is any and all hand digging (or other excavation methods approved by the Engineer) that may be necessary due to (but not limited to), buried utility proximity verification.

The work shall conform to the applicable portions of Section 213 of the Standard Specifications, except as modified herein.

The depth of the trench shall be variable. The width of the trench shall be sufficient to allow proper investigation of the entire trench.

Backfilling all trenches located within pavement areas or within 2 feet of the proposed edge of pavement, curb, gutter, curb and gutter, or sidewalk shall conform to the applicable portions of Section 208 of the Standard Specifications.

Method of Measurement: This work will be measured in place per lineal foot of trench. Trench backfill work done in accordance with Section 208 of the Standard Specifications shall not be paid for separately but shall be included in the work for EXPLORATION TRENCH (SPECIAL).

Basis of Payment: This work will be measured in-place and will be paid for at the contract unit price per foot for EXPLORATION TRENCH (SPECIAL).

TRIANGULAR HI-INTENSITY GUARDRAIL DELINEATOR.

Description

This work shall consist of furnishing and installing on guardrail panel TRIANGULAR HI-INTENSITY GUARDRAIL DELINEATOR of a type approved by the Engineer and removing and properly disposing old delineators, if any, outside of County right-of-way.

Materials

The Contractor shall be responsible for furnishing triangular hi-intensity guardrail delineator of a type approved by the Engineer and as specified in Section 1097 of Standard Specifications for Road and Bridge Construction.

Installation Requirements

The TRIANGULAR HI-INTENSITY GUARDRAIL DELINEATOR shall be installed on guardrail panels in accordance with the manufacturer's recommendation or as directed by the Engineer.

Specifications

- Effective Reflex Area: Approximately 8 square inches.
- Bracket: 12 gauge galvanized steel {approx. 5" x 2.5")
- Color/Material: White (or yellow) Type ZZ prismatic retroreflective sheeting, bidirectional

Method of Measurement

SPECIFICATIONS

This work shall be measured for payment for each Triangular Hi-Intensity Guardrail Delineator.

Basis of Payment

The work shall be paid for at the contract unit price per each for TRIANGULAR HI-INTENSITY GUARDRAIL DELINEATOR installed on existing guardrail which price shall include furnishing the guardrail delineator with all required installation hardware and/or fastening material and equipment's required for the work.

DRAWINGS - AT END OF DOCUMENT

1. Steel Plate Beam Guardrail (4 pages)
2. Traffic Barrier Terminal Type 1 (2 pages)
3. Traffic Barrier Terminal Type 2 (1 page)
4. Traffic Barrier Terminal Type 5 (1 page)
5. Traffic Barrier Terminal Type 6 (3 pages)
6. Traffic Barrier Terminal Type 6a (3 pages)
7. Quad Guard Attenuator - East Hazel Crest (2 pages)
8. Shoulder Widening for Type 1 (Special) Guardrail Terminals (2 pages)
9. Backside Protection of Guardrail (1 page)
10. PCC/HMA Stabilization at Steel Plate Beam Guardrail (1 page)
11. Guardrail Stabilization (1 page)
12. Cook County Roadway Jurisdiction by Districts (4 pages)

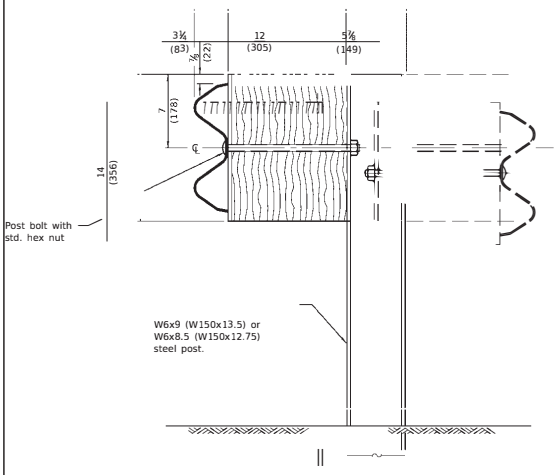

STEEL POST CONSTRUCTION

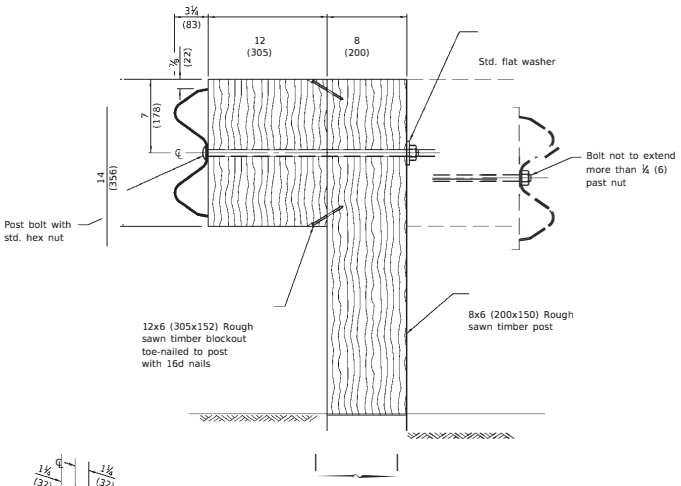

WOOD POST CONSTRUCTION

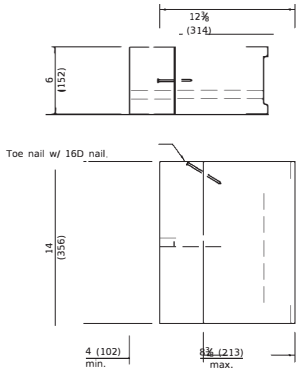

TWO-PIECE WOOD BLOCKOUT OPTION

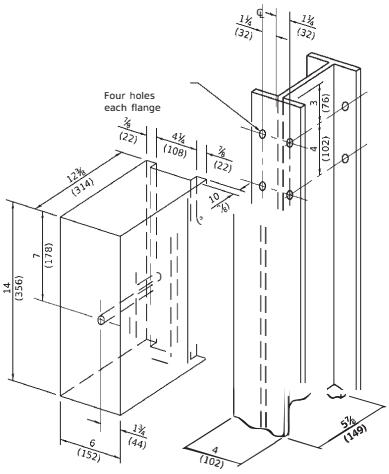

Note:
All holes ¾ (20) dia.

WOOD BLOCK-OUT AND STEEL POST DETAILS

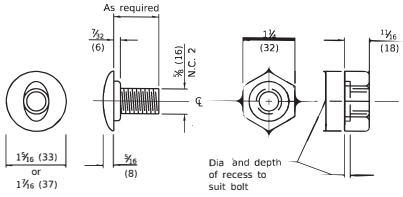

POST OR SPLICE BOLT & NUT

Illinois Department of Transportation

APPROVED January 1 2018
ENGINEER OF POLICY AND PROCEDURES
APPROVED January 1 2018
ENGINEER OF DESIGN AND ENVIRONMENT

(3/05) 1-97

STEEL PLATE BEAM GUARDRAIL

(Sheet 2 of 4)

STANDARD 630001-12

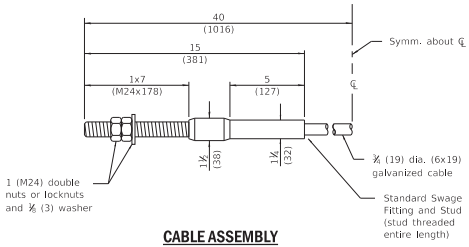

CABLE ASSEMBLY

(42,800 lbs. (190 kN) min. breaking strength)
Tighten to taut tension.

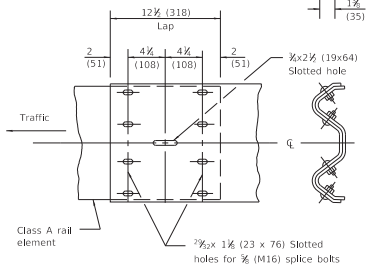

RAIL ELEMENT SPLICE

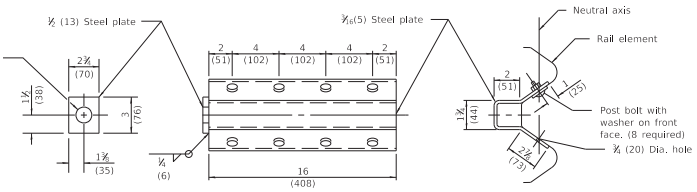

NOTE
Anchor plate T shall be used to attach cable assembly to guardrail when required on traffic barrier terminals.

ANCHOR PLATE T DETAILS

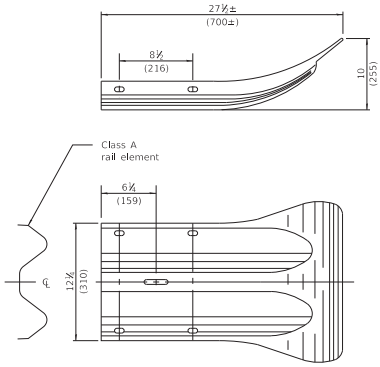

END SECTION

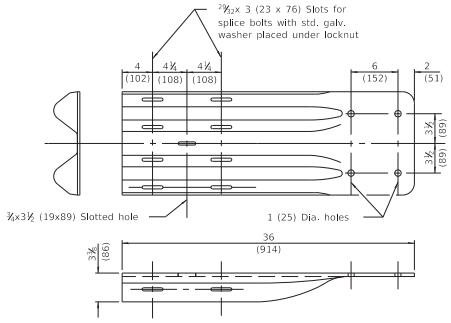

NOTE
When end shoe is attached to a bridge parapet which has an expansion joint, the bolts shall be provided with a locknut or double nut and shall be tightened only to a point that will allow guardrail movement.

The standard end shoe shall be attached to the concrete with pre-drilled or self-drilling anchor bolts. The anchor cone shall be set flush with the surface of the concrete.

Externally threaded studs protruding from the surface of the concrete will not be permitted.

END SHOE

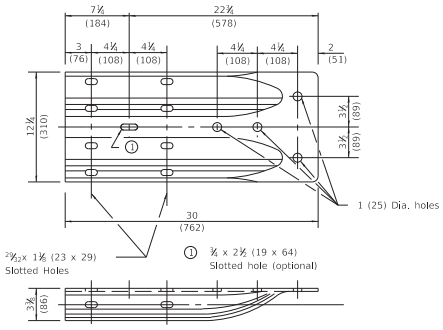

ALTERNATE END SHOE

Illinois Department of Transportation

APPROVED January 1 2018
Michael Braud
ENGINEER OF POLICY AND PROCEDURES

APPROVED January 1 2018
Marcia M. Phillips
ENGINEER OF DESIGN AND ENVIRONMENT

ISSUED 1-1-07

STEEL PLATE BEAM GUARDRAIL

(Sheet 3 of 4)

STANDARD 630001-12

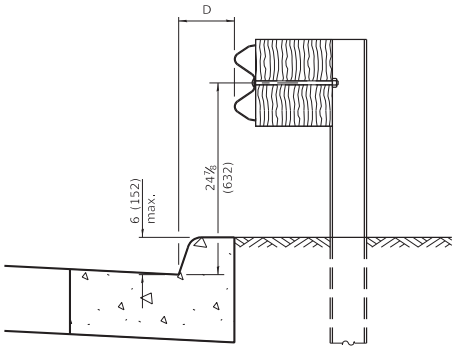

0 ≤ D < 6 (150 m)

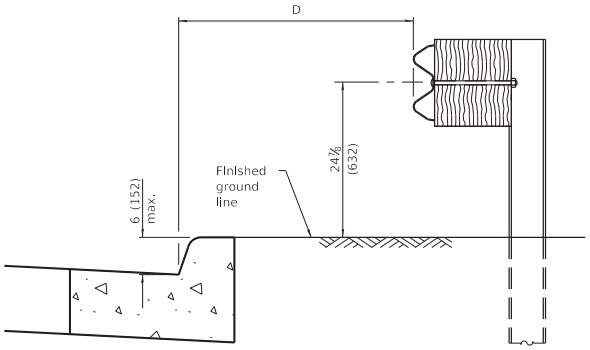

4'-0" (1.2 m) ≤ D ≤ 12'-0" (3.7 m)

GUARDRAIL PLACED BEHIND CURB

Note: 'D' shall not exceed 6 (152) for design speeds greater than 45 mph.

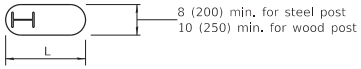

PLAN

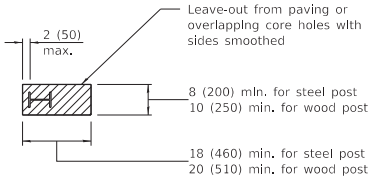

PLAN

V	W	L	
		Steel Post	Wood Post
0 - 6 (0 - 152)	24 (610)	21 (530)	23 (580)
> 6 - 18 (> 152 - 458)	18 (458)	14½ (368)	16½ (419)
> 18 - 31 (> 458 - 787)	12 (305)	8 (203)	10 (250)
> 31 - 40⅜ (> 787 - 1.02 m)	12 - 0 (305 - 0)	8 (203)	10 (250)

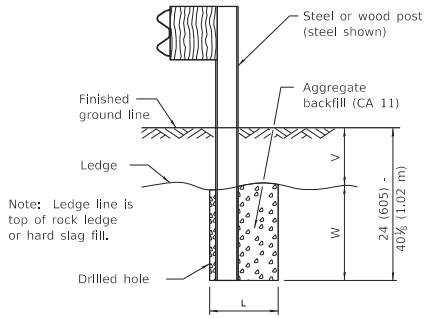

ELEVATION

FOOTING FOR POST WHEN IMPERVIOUS MATERIAL IS ENCOUNTERED

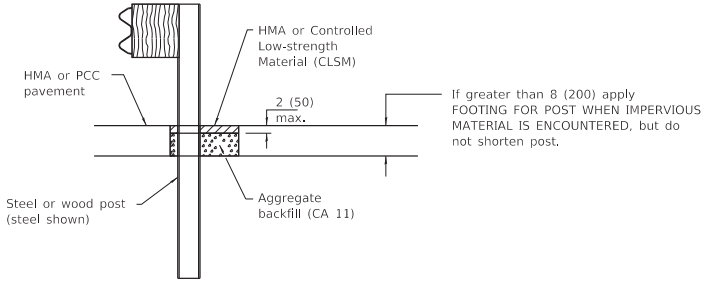

ELEVATION

LEAVE-OUT FOR POST WHEN PAVED MATERIAL IS ENCOUNTERED

Illinois Department of Transportation

APPROVED January 1, 2018
ENGINEER OF POLICY AND PROCEDURES

APPROVED January 1, 2018
ENGINEER OF DESIGN AND ENVIRONMENT

ISSUED 1-1-07

STEEL PLATE BEAM GUARDRAIL

(Sheet 4 of 4)

STANDARD 630001-12

OFFSETS TO FACE OF RAIL		
Post	X ft (m)	Y ft (m)
1	37.22 (11.345)	4.0 (1.22)
2	31.09 (9.475)	2.79 (0.850)
3	24.92 (7.595)	1.79 (0.545)
4	20.79 (6.335)	1.25 (0.380)
5	16.64 (5.070)	0.80 (0.245)
6	12.49 (3.805)	0.45 (0.135)
7	6.25 (1.905)	0.11 (0.035)
8	0.00 (0.00)	0.00 (0.00)

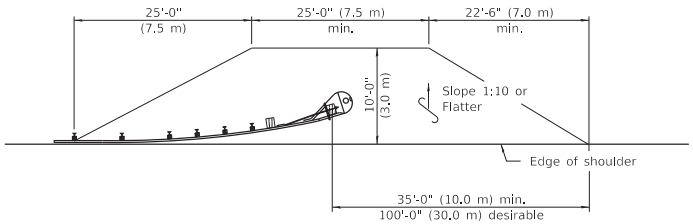

SHOULDER WIDENING TRANSITION

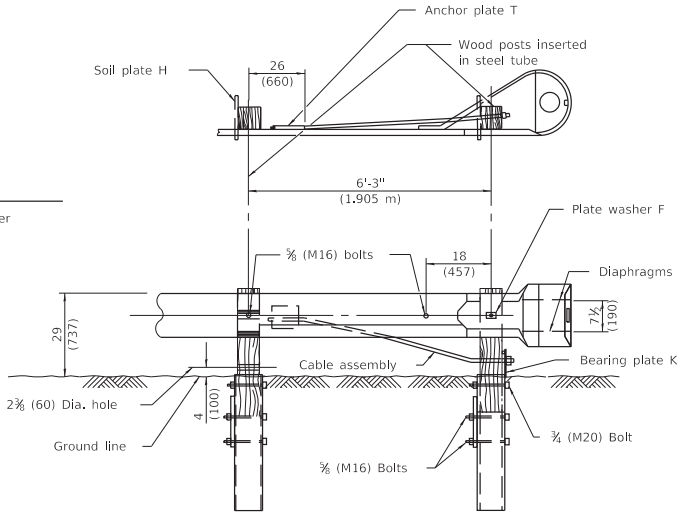

WOOD BREAKAWAY POSTS
TUBULAR STEEL FOUNDATIONS

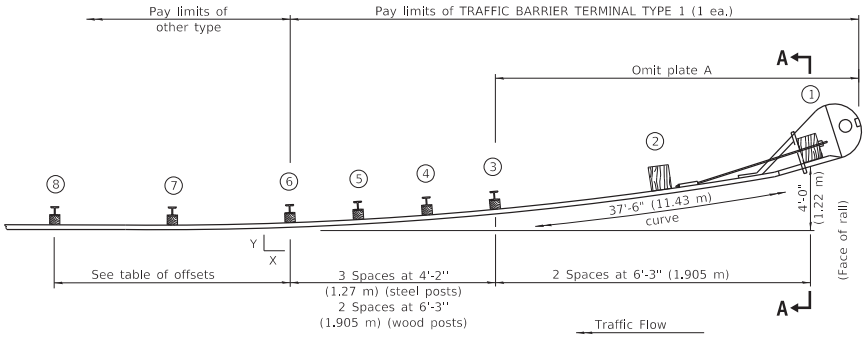

PLAN

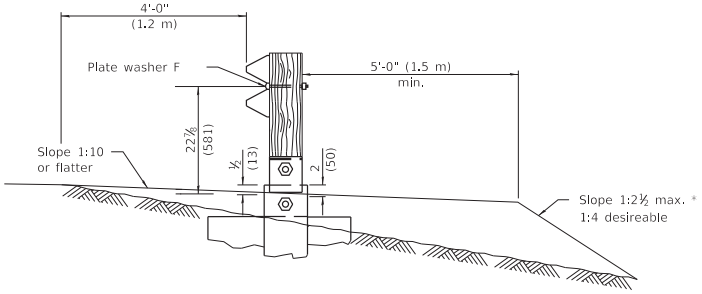

SECTION A-A

* If fill height exceeds 5'-0" (1.5 m) use 1:3 max.

GENERAL NOTES

See Standard B.L.R. 26 for details of guardrail not shown.

Posts at location 1 & 2 shall be wood breakaway posts. Posts other than 1 & 2 may be either standard wood posts or steel posts, at the option of the Contractor. If standard wood posts are used, one post shall be located midway between and in lieu of posts 4 & 5. The offset (Y) for this post shall be 12 (300).

A two-piece assembly may be substituted for the one piece nose shown above.

The bearing plate K shall be held in position by (2) two eightpenny nails driven into the post and bent over the top of the plate.

When this terminal is used with Standard 630001, the guardrail shall transition down to the height of the terminal prior to post 8.

All slope ratios are expressed as units of vertical displacement to units of horizontal displacement (V:H).

All dimensions are in inches (millimeters) unless otherwise shown.

Illinois Department of Transportation

PASSED January 1, 2012
ENGINEER OF LOCAL ROADS AND STREETS

APPROVED January 1, 2012
ENGINEER OF DESIGN AND ENVIRONMENT

ISSUED 1-1-08

DATE	REVISIONS
1-1-12	Revised barrier terminal
	height and wood
	breakaway post.
1-1-09	Switched units to
	English (metric).

TRAFFIC BARRIER TERMINAL TYPE 1

(Sheet 1 of 2)

STANDARD B.L.R. 23-4

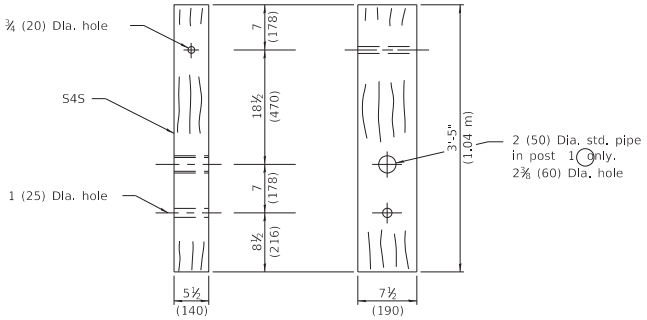

WOOD BREAKAWAY POST
(2 ea.)

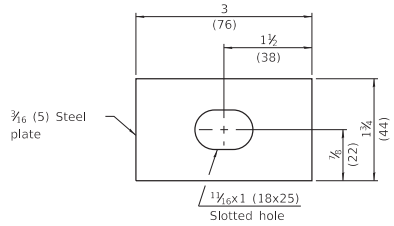

PLATE WASHER F
(1 ea.)

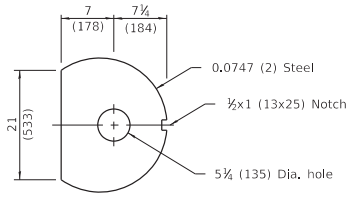

DIAPHRAGM
(2 ea.)

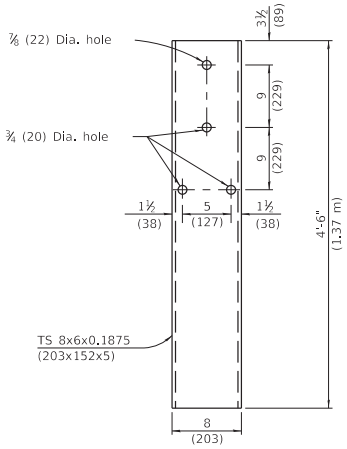

STEEL TUBE
(2 ea.)

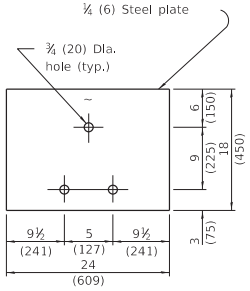

SOIL PLATE H
(2 ea.)

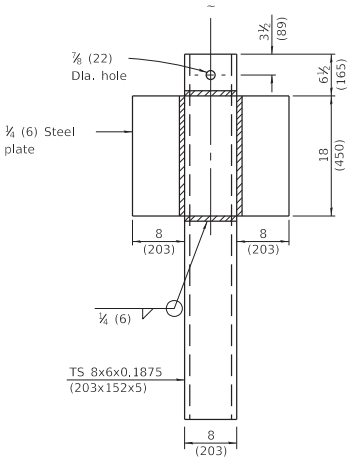

ALTERNATE SOIL PLATE CONNECTION

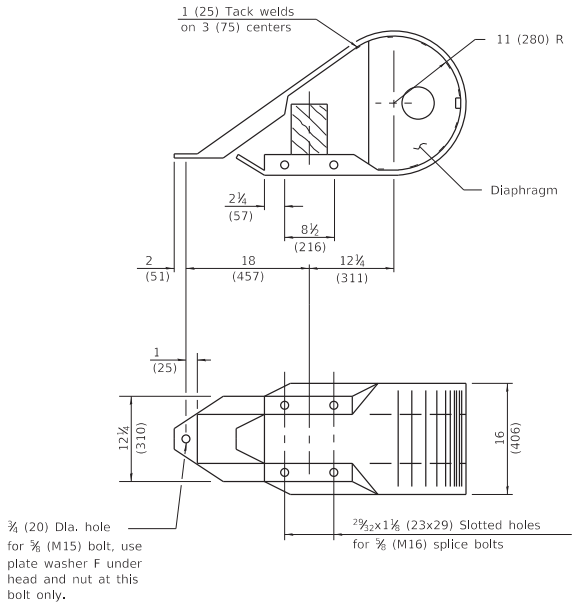

NOSE
(1 ea.)

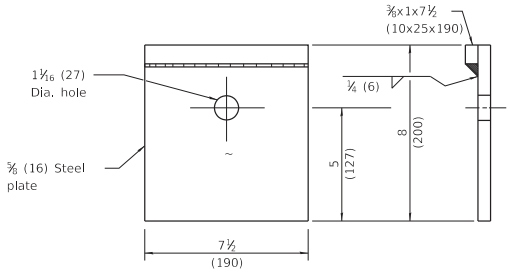

BEARING PLATE K
(1 ea.)

Illinois Department of Transportation

PASSED January 1, 2012
ENGINEER OF LOCAL ROADS AND STREETS

APPROVED January 1, 2012
ENGINEER OF DESIGN AND ENVIRONMENT

ISSUED 1-1-08

TRAFFIC BARRIER TERMINAL TYPE 1

(Sheet 2 of 2)

STANDARD B.L.R. 23-4

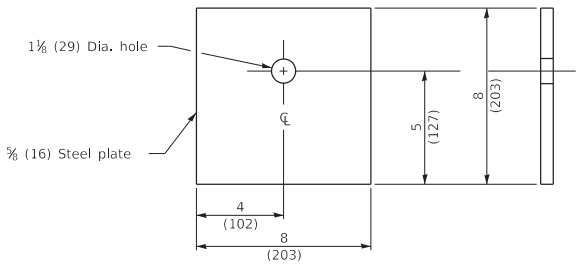

BEARING PLATE K

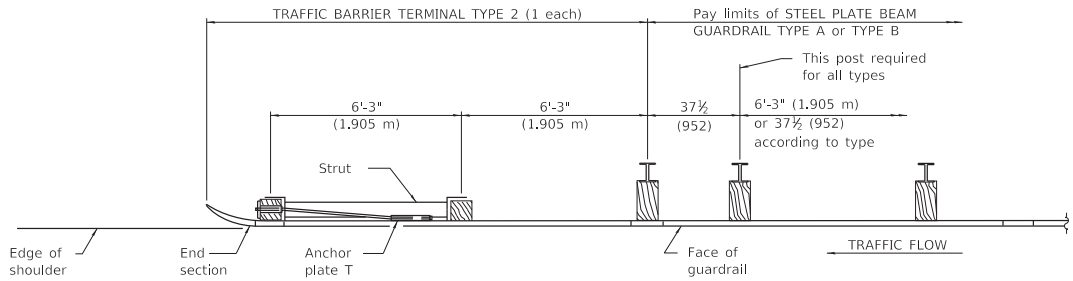

PLAN

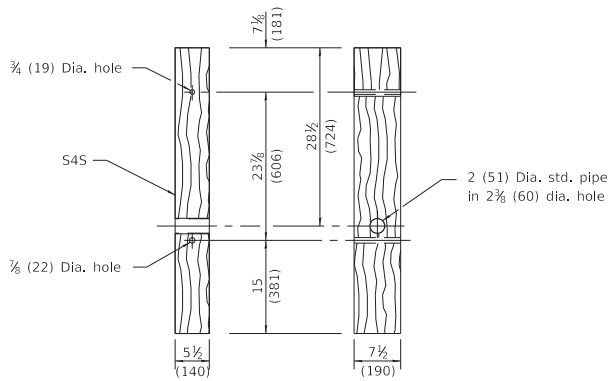

FRONT **SIDE**

WOOD POST

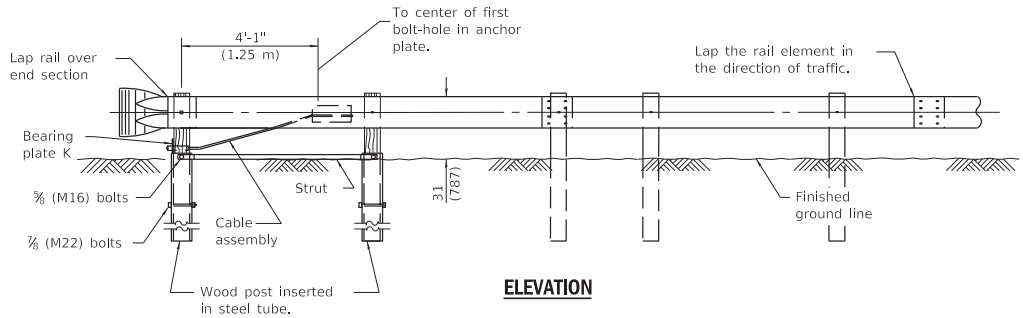

ELEVATION

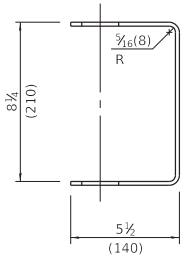

YOKE

3/16 (5) thick steel

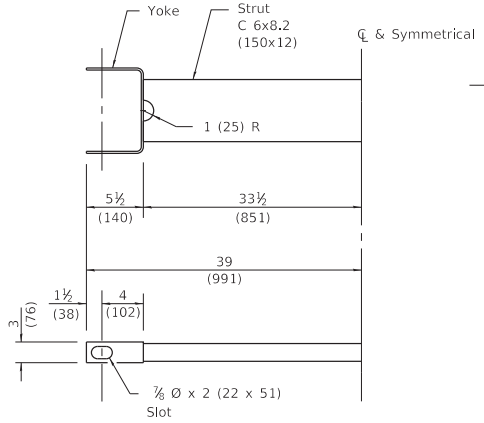

CABLE STRUT

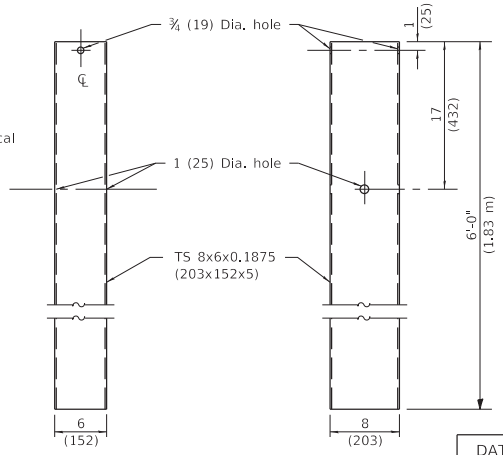

FRONT **SIDE**

STEEL TUBE

GENERAL NOTES

See Standard 630001 for details of guardrail not shown.

The bearing plate K shall be held in position by two eight penny nails driven into the post and bent over the top of the plate.

All dimensions are in inches (millimeters) unless otherwise shown.

Illinois Department of Transportation

PASSED January 1, 2017
Michael Brand
ENGINEER OF POLICY AND PROCEDURES

APPROVED January 1, 2017
Maureen M. Beck
ENGINEER OF DESIGN AND ENVIRONMENT

ISSUED 1-1-17

DATE	REVISIONS
1-1-17	Revised wood post length
	and hole spacing.
1-1-13	Corrected metric dimension
	for BEARING PLATE K. Changed
	pipe dia. in wood post.

TRAFFIC BARRIER TERMINAL, TYPE 2

STANDARD 631011-10

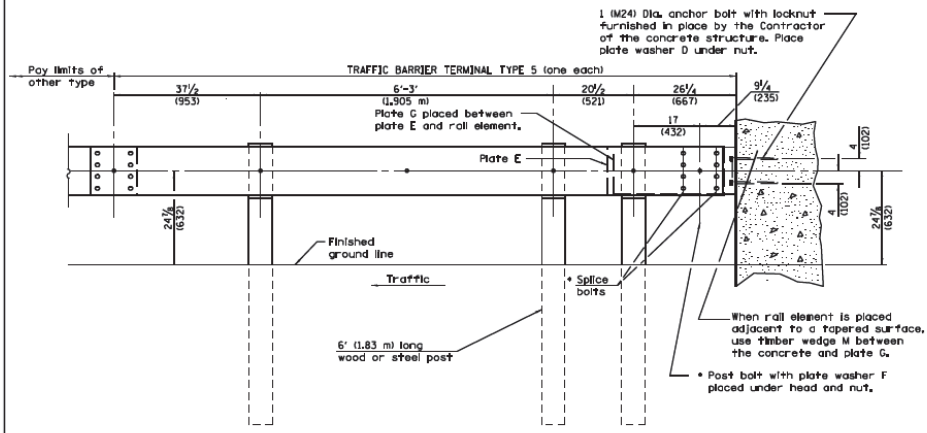

TYPE 5 – CONCRETE BRIDGE PARAPET

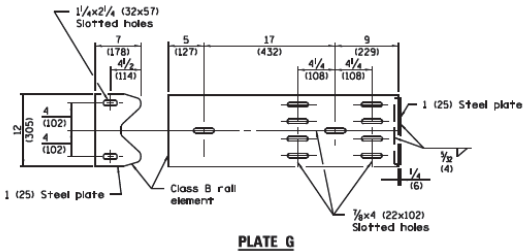

PLATE G

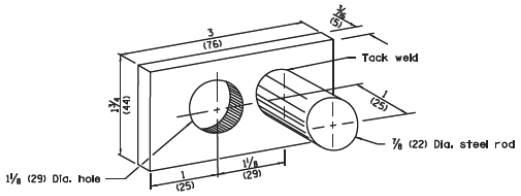

PLATE WASHER D

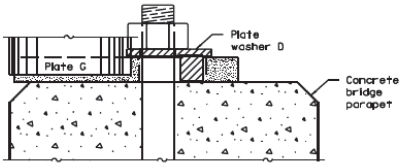

PLACEMENT OF PLATE WASHER D

(PLAN)

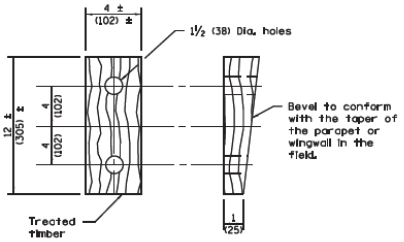

WEDGE M

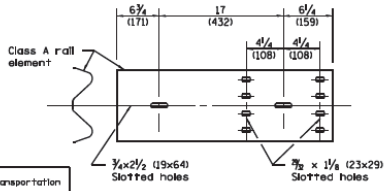

PLATE E

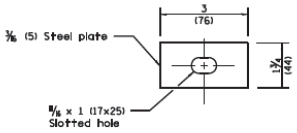

PLATE WASHER F

GENERAL NOTES

Install plate washer D so the 1 (25) projection fills the remainder of the slotted holes in the 1 (25) end plate on plate G after the 1 (M24) dia. bolts are in place.

- When an expansion joint exists below the connector, bolts shall be provided with a locknut or double nuts and shall be tightened only to a point that will allow plate G to be free to move.

See Standard 630001 for details of guardrail not shown.

All dimensions are in inches (millimeters) unless otherwise shown.

Illinois Department of Transportation

PASSED January 1, 2015
ENGINEER OF POLICY AND PROCEDURES

APPROVED January 1, 2015
ENGINEER OF DESIGN AND ENVIRONMENT

ISSUED 1-1-97

DATE	REVISIONS
1-1-15	Revised post spacing
	dimensions on elevation.
1-1-09	Switched units to
	English (metric).

TRAFFIC BARRIER TERMINAL, TYPE 5

STANDARD 631026–06

PARAPET OR WINGWALL

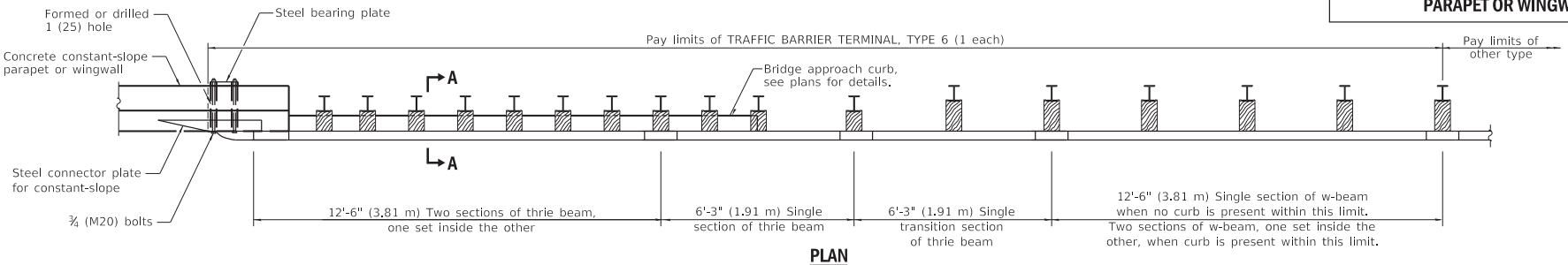

PLAN

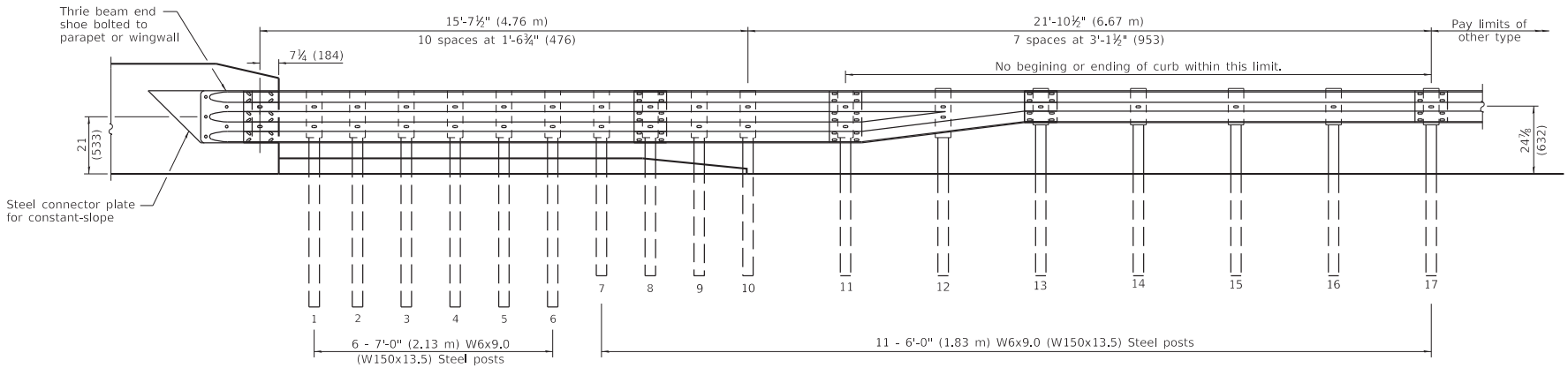

ELEVATION

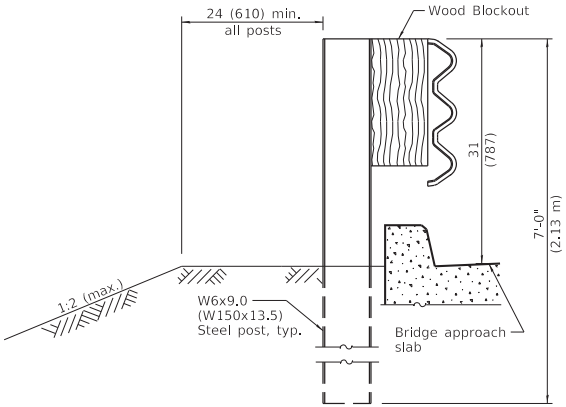

SECTION A-A

GENERAL NOTES

See Standard 630001 for details of guardrail not shown.

Thrie beam rail shall be bolted to block-out at all posts.

All slope ratios are expressed as units of vertical displacement to units of horizontal displacement (V:H).

All dimensions are in inches (millimeters) unless otherwise shown.

DATE	REVISIONS
1-1-21	Added Detail A and revised
	plate dimensions on sheet 4.
1-1-20	Revised F-Shape to constant
	slope parapet and added steel
	connector plate. Added two posts
	and revised post length.

TRAFFIC BARRIER TERMINAL, TYPE 6

(Sheet 1 of 4)

STANDARD 631031-17

Illinois Department of Transportation

PASSED January 1, 2021
ENGINEER OF POLICY AND PROCEDURES

APPROVED January 1, 2021
ENGINEER OF DESIGN AND ENVIRONMENT

ISSUED 1-1-17

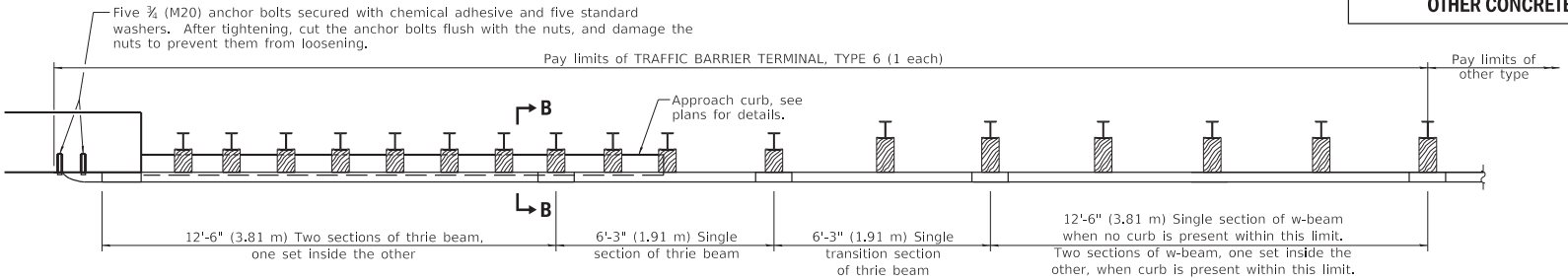

PLAN

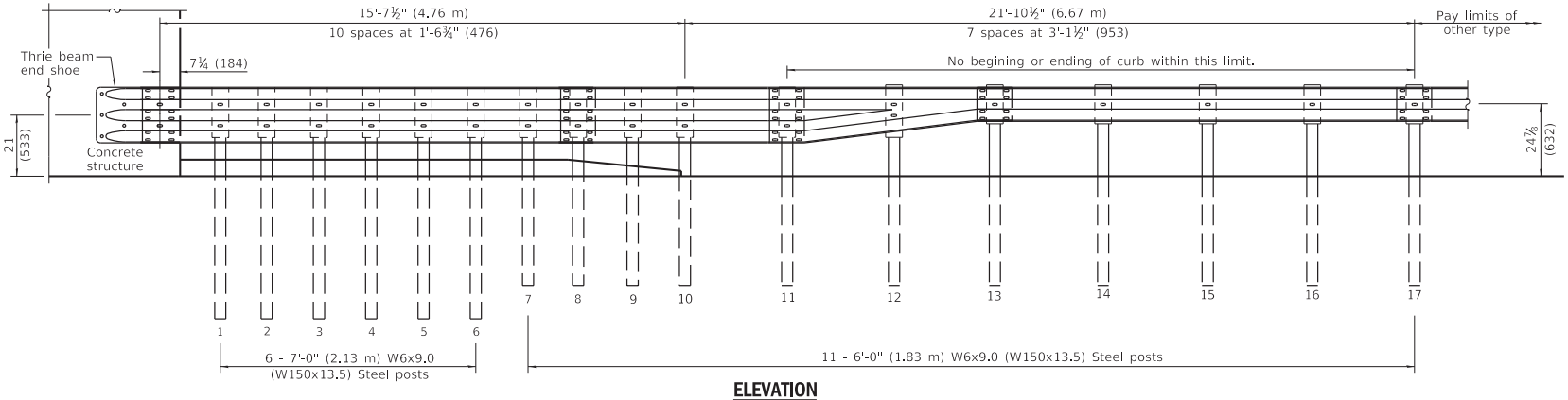

ELEVATION

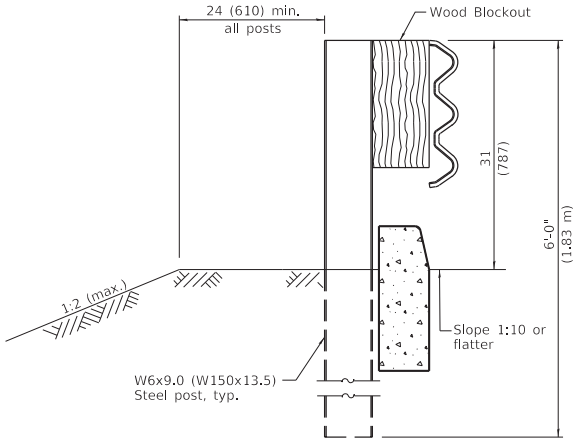

SECTION B-B

Illinois Department of Transportation

PASSED January 1, 2021
ENGINEER OF POLICY AND PROCEDURES

APPROVED January 1, 2021
ENGINEER OF DESIGN AND ENVIRONMENT

ISSUED 1-1-97

TRAFFIC BARRIER TERMINAL, TYPE 6

(Sheet 2 of 4)

STANDARD 631031-17

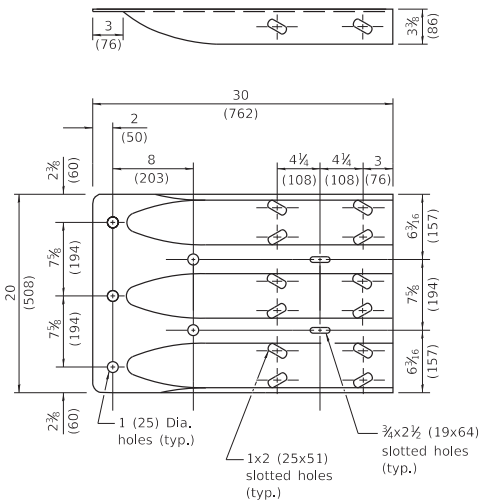

THRIE BEAM END SHOE DETAIL

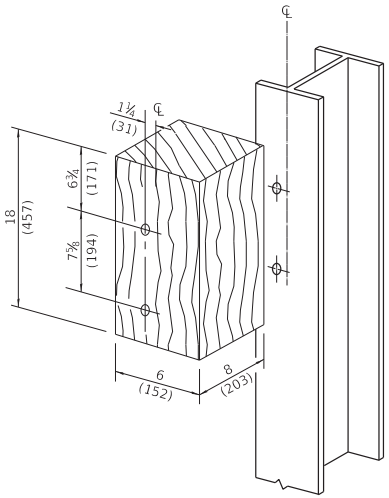

POSTS 1-11 WOD BLOCKOUT DETAIL

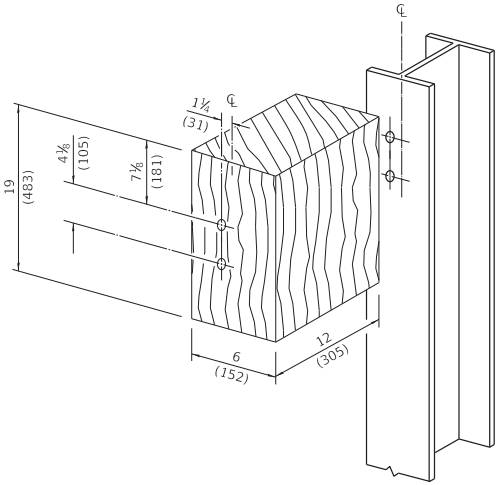

POST 12 WOD BLOCKOUT DETAIL

(See Standard 630001 for post 13-17 blockouts.)

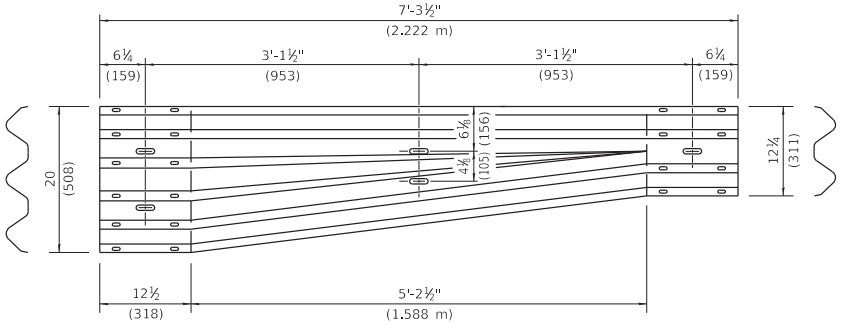

TRANSITION SECTION

(10 gauge (3.4) rail element)

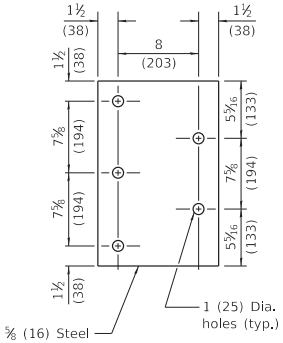

PARAPET STEEL BEARING PLATE DETAIL

(5 each individual 5x5x⅝ (125x125x16) steel plates with centered 1 (25) holes may be substituted for the plate shown.)

Illinois Department of Transportation

PASSED January 1, 2021
ENGINEER OF POLICY AND PROCEDURES

APPROVED January 1, 2021
ENGINEER OF DESIGN AND ENVIRONMENT

ISSUED 1-1-97

TRAFFIC BARRIER TERMINAL, TYPE 6

(Sheet 3 of 4)

STANDARD 631031-17

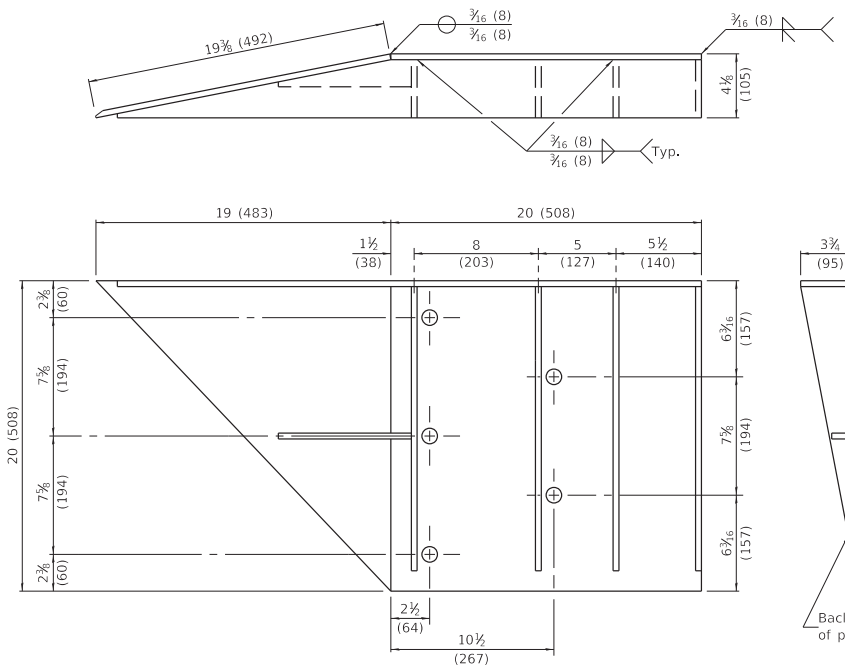

WELDING INSTRUCTION

(Back side of plate shown)

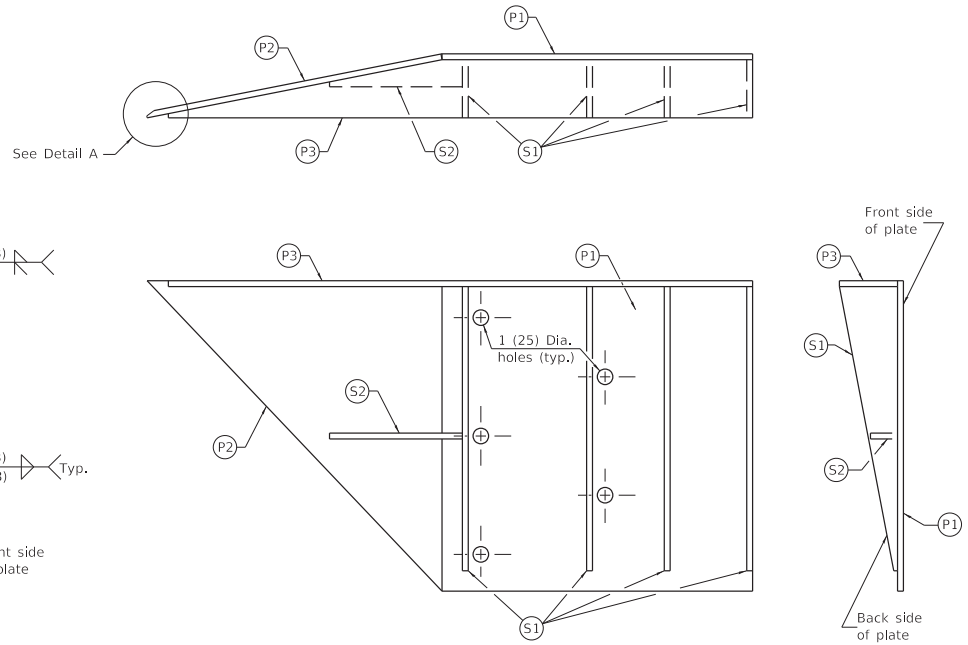

PLATE AND STIFFENER IDENTIFICATION

(Back side of plate shown)

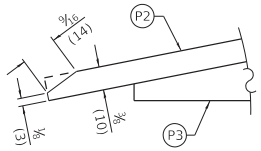

DETAIL A

(Bevel front corner of plate P2 as shown for handling purposes.)

CONNECTOR PLATE DIMENSION (PER ASSEMBLY)				
PLATE	QUANTITY	SHAPE	SIZE A x B x C x D x E	THICKNESS
P1	1	A B	20 x 20 (508 x 508)	⅜ (10)
P2	1	A B C	19⅜ x 20 x 27 13/16 (492 x 508 x 706)	⅜ (10)
P3	1	E A D B C	20 x 3¾ x 37⅝ x ¼ x 17 15/16 (508 x 95 x 956 x 6 x 456)	⅜ (10)
S1	4	A D B C	18 5/16 x ¼ x 18⅝ x 3¾ (465 x 6 x 473 x 95)	⅜ (10)
S2	1	E A D B C	1 5/16 x 1¾ x 8 1/16 x ⅜ x 6⅞ (33 x 44 x 205 x 10 x 175)	⅜ (10)

STEEL CONNECTOR PLATE FOR CONSTANT SLOPE

Steel connector plate shall be AASHTO M 270 Grade 36 (M 270M Grade 250) steel and galvanized according to AASHTO M 111.

All dimensions are in inches (millimeters) unless otherwise shown.

Illinois Department of Transportation

PASSED January 1, 2021
ENGINEER OF POLICY AND PROCEDURES

APPROVED January 1, 2021
ENGINEER OF DESIGN AND ENVIRONMENT

ISSUED 1-1-07

TRAFFIC BARRIER TERMINAL, TYPE 6

(Sheet 4 of 4)

STANDARD 631031-17

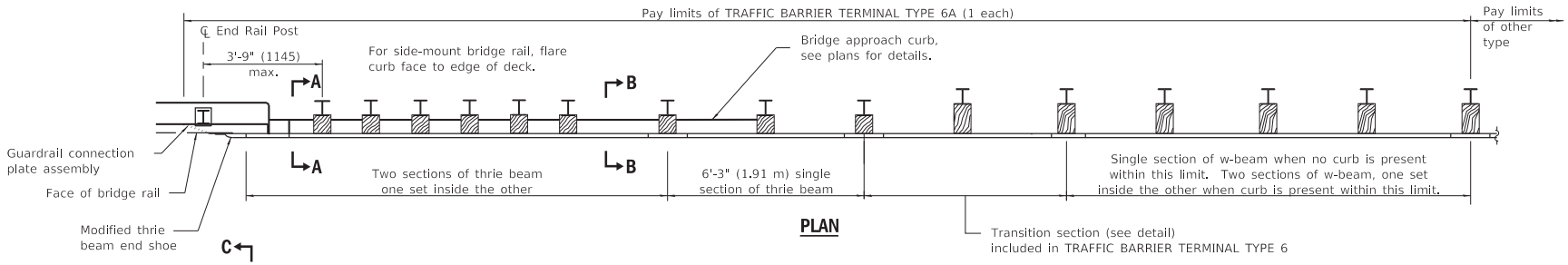

PLAN

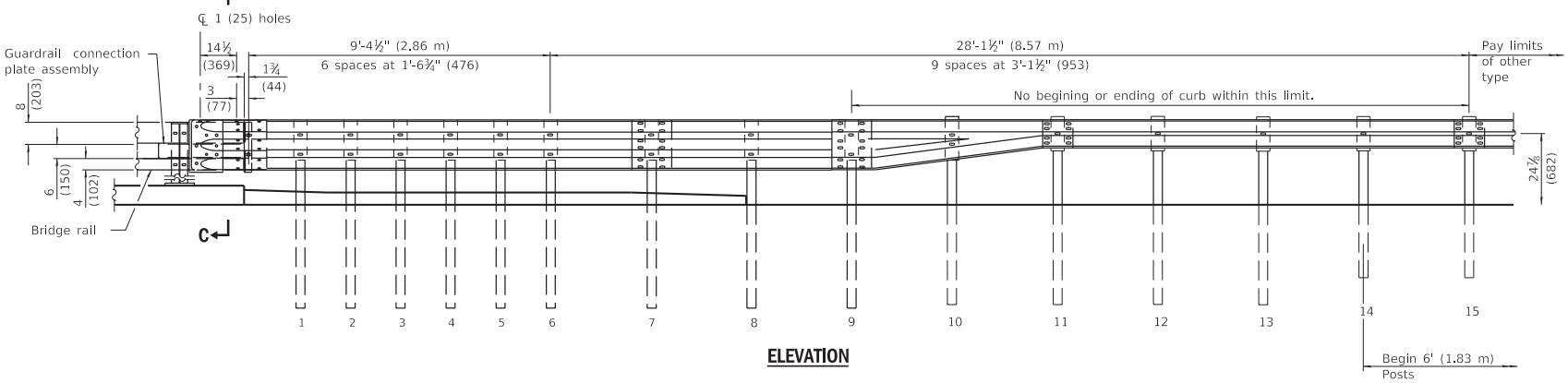

ELEVATION

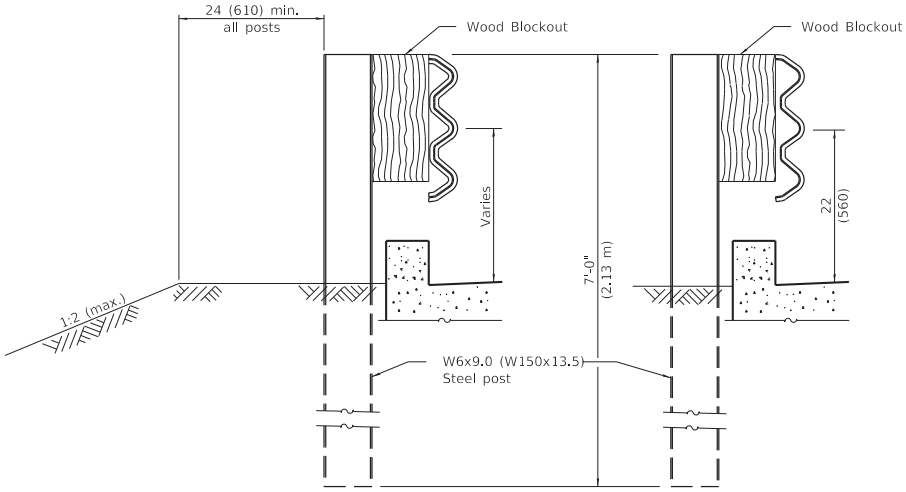

SECTION A-A **SECTION B-B**

GENERAL NOTES

This standard shows attachment to curb mounted bridge rail. Attachment to side mounted bridge rail is similar.

See Standard 630001 for details of guardrail not shown.

Thrie beam rail shall be bolted to block-out at all posts.

All slope ratios are expressed as units of vertical displacement to units of horizontal displacement (V:H).

All dimensions are in inches (millimeters) unless otherwise shown.

Illinois Department of Transportation

PASSED January 1, 2017
ENGINEER OF POLICY AND PROCEDURES

APPROVED January 1, 2017
ENGINEER OF DESIGN AND ENVIRONMENT

ISSUED 1-1-2003

DATE	REVISIONS
1-1-17	Revised length of thrie
	beam. Revised length of
	posts.
1-1-13	Added note to see plans
	for bridge approach curb
	details.

TRAFFIC BARRIER TERMINAL, TYPE 6A

(Sheet 1 of 3)

STANDARD 631032-09

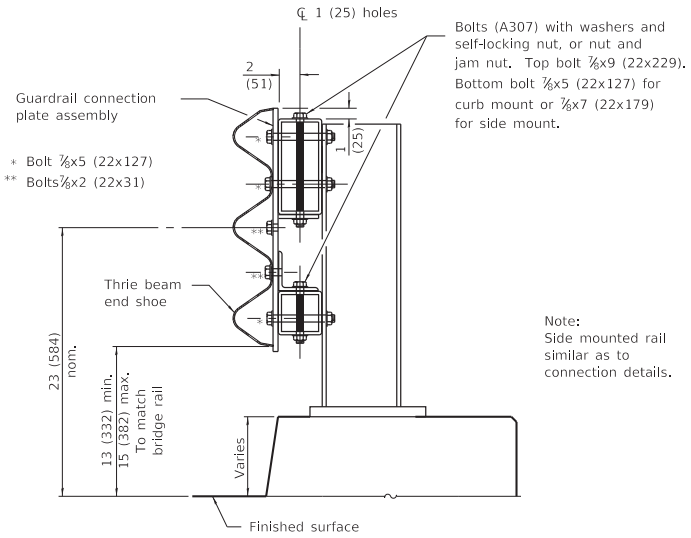

Note:
Side mounted rail similar as to connection details.

SECTION C-C

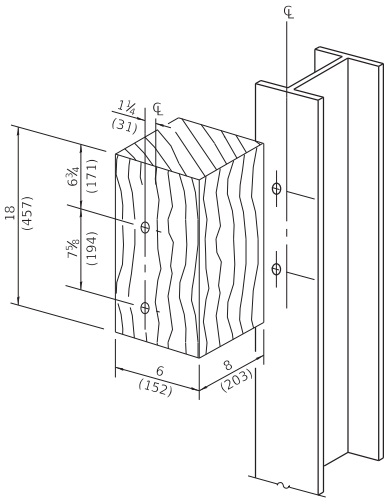

POSTS 1-9 WOOD BLOCKOUT DETAIL

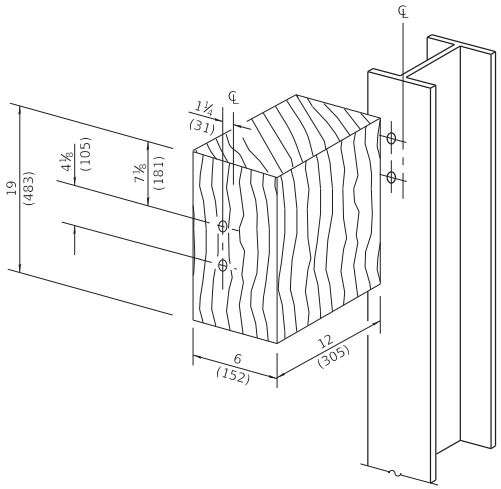

POST 10 WOOD BLOCKOUT DETAIL
(See Standard 630001 for post 11-15 blockouts.)

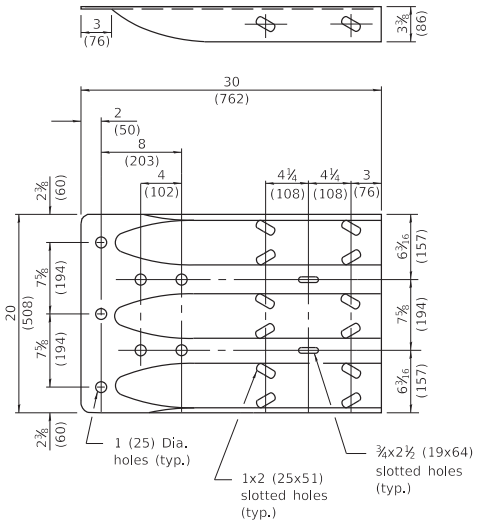

MODIFIED THRIE BEAM END SHOE DETAIL

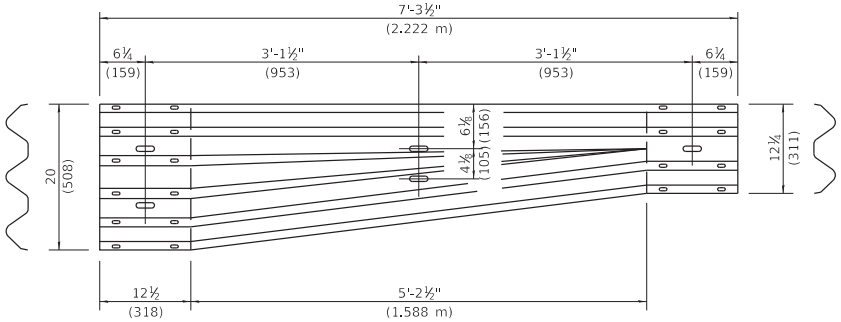

TRANSITION SECTION
(10 gauge (3.4) rail element)

Illinois Department of Transportation

PASSED January 1, 2017
ENGINEER OF POLICY AND PROCEDURES

APPROVED January 1, 2017
ENGINEER OF DESIGN AND ENVIRONMENT

ISSUED 1-2003

TRAFFIC BARRIER TERMINAL, TYPE 6A

(Sheet 2 of 3)

STANDARD 631032-09

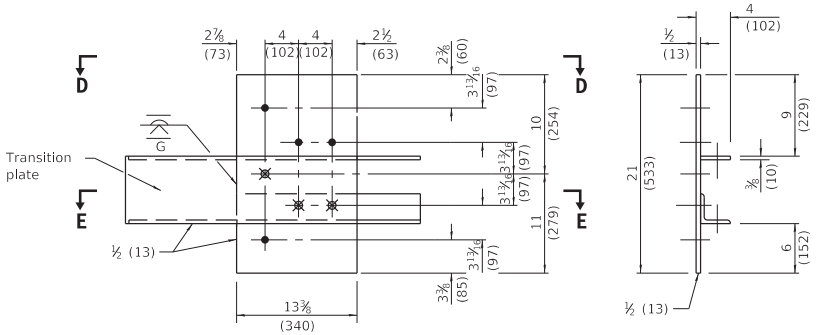

GUARDRAIL CONNECTION PLATE ASSEMBLY DETAILS

(Mirror for opposite end)

LEGEND

- ● ℄ 4-1 (25) holes for ⅞ (22) H.S. bolts and nuts
- ⊗ Drill and tap 3 holes for ⅞ (22) H.S. bolts.

Dimensions	A	B
For Curb Mounted Rail	8¾ (222)	3½ (89)
For Side Mounted Rail	9¾ (247)	2½ (64)

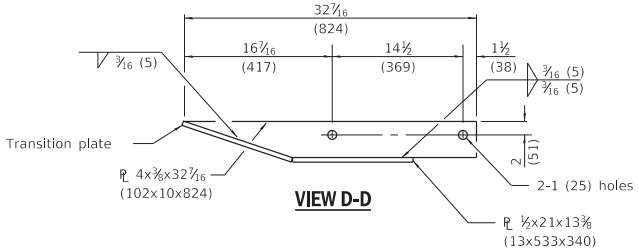

VIEW D-D

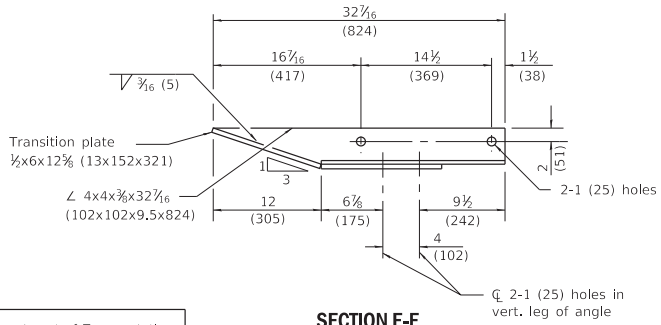

SECTION E-E

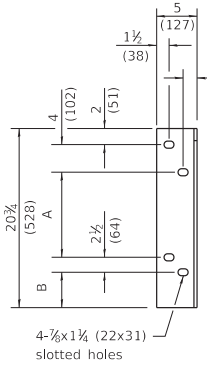

DEPARTURE END VIEW

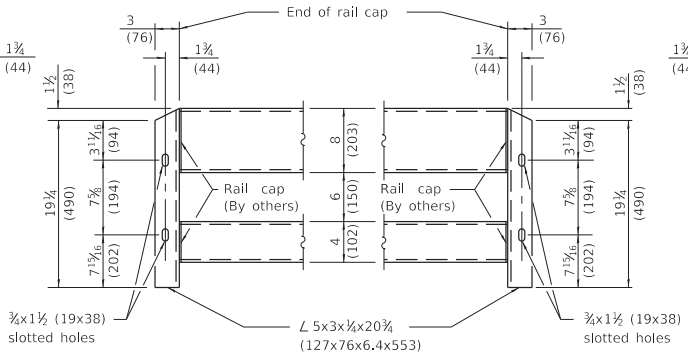

CONNECTION ANGLES

(Install angles to rail caps using ⅝ (19) washers and self-locking nuts or nuts and jam nuts, to be provided by others)

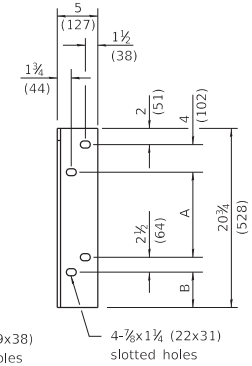

APPROACH END VIEW

Illinois Department of Transportation

PASSED January 1, 2017
ENGINEER OF POLICY AND PROCEDURES

APPROVED January 1, 2017
ENGINEER OF DESIGN AND ENVIRONMENT

ISSUED 1-2-2013

TRAFFIC BARRIER TERMINAL, TYPE 6A

(Sheet 3 of 3)

STANDARD 631032-09

C.H.	SECTION	COUNTY	TOTAL SHEETS	SHEET NO.
884	04-8843-00-PV	COOK	153	123
STA.		TO STA.		
FED. ROAD DIST. NO.	ILLINOIS	FED. AID PROJECT		

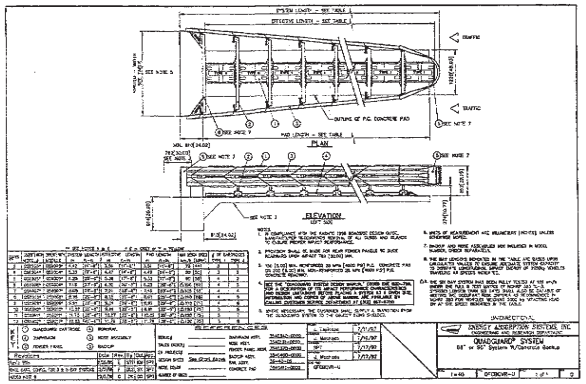

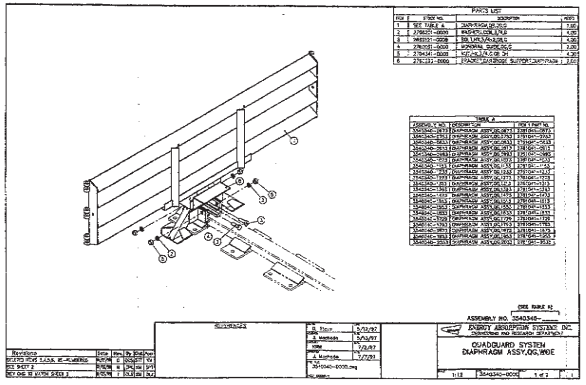

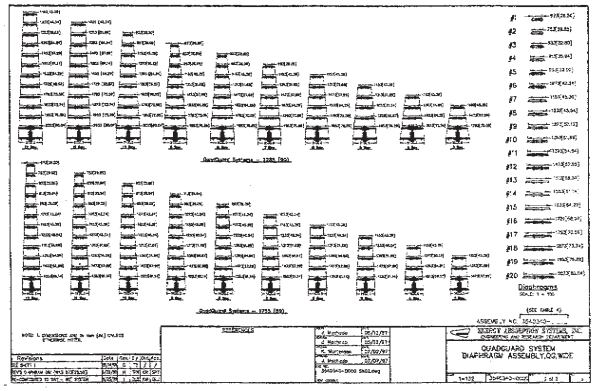

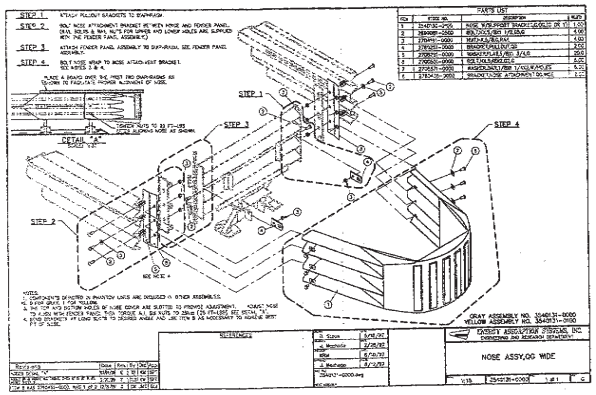

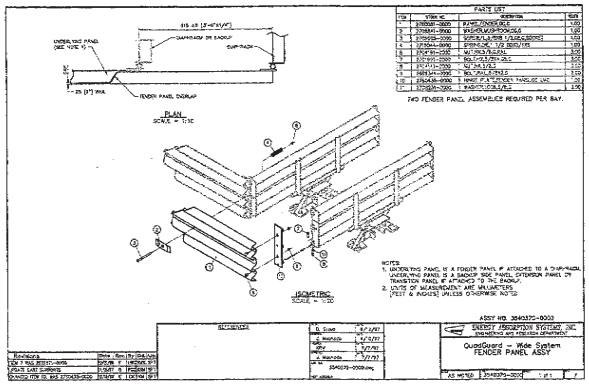

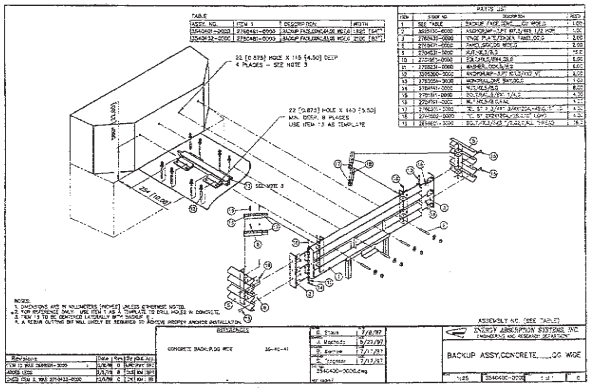

NOTES:

1. CRASH ATTENUATORS SHALL BE "QUADGUARD SYSTEMS FOR WIDE HAZARDS." THE SYSTEM SHALL BE A 3-BAY SYSTEM WITH A CONCRETE BACKUP.
2. DESIGN AND INSTALLATION INFORMATION CAN BE OBTAINED BY CALLING ENERGY ABSORPTION SYSTEMS, INC. AT 1-888-32-ENERG.
3. THE CRASH ATTENUATORS SHALL BE DESIGNED AND INSTALLED ACCORDING TO THE ABOVE DETAILS EXCEPT AS FOLLOWS. THE CONCRETE PAD SHALL BE DELETED ALLOWING ONLY THE CONSTRUCTION OF THE BELOW GRADE ANCHOR BLOCK (SEE "CONCRETE PAD AND BACKUP, QGWIDE" DETAIL). THE ANCHOR BOLTS SHALL BE TIED DIRECTLY INTO THE PROPOSED PAVEMENT.

ROBINSON ENGINEERING, LTD.
CONSULTING REGISTERED PROFESSIONAL ENGINEERS
AND PROFESSIONAL LAND SURVEYORS
17050 SOUTH PARK AVENUE SOUTH HOLLAND, ILLINOIS 60473
(708) 331-6700 FAX (708) 331-3826

© COPYRIGHT 2004

ILLINOIS DESIGN FIRM REGISTRATION NO. 184001195

CRASH ATTENUATOR DETAILS
171ST STREET RECONSTRUCTION
WOOD STREET TO ASHLAND AVENUE
EAST HAZEL CREST, ILLINOIS

Drawn by:		Date:	8-17-04
Checked by:	JN	Scale:	NA
Sheet	123 of 153	Project No.	99-305.02

REVISIONS		
No.	Date	Remarks

99305_02-DTLS-05

C.H.	SECTION	COUNTY	TOTAL SHEETS	SHEET NO
884	04-88431-08-PV	COOK	153	124
STA.		TO STA.		
FED. ROAD DIST. NO.		ILLINOIS	FED. AID PROJECT	

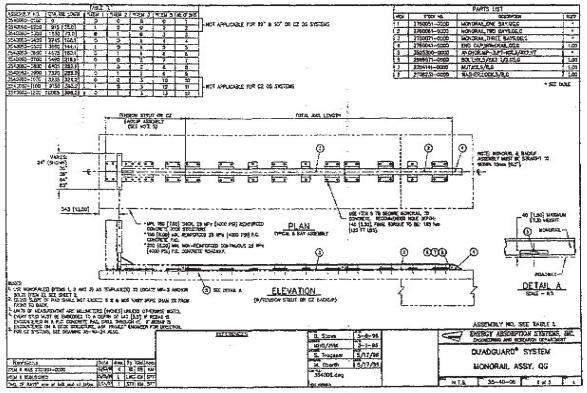

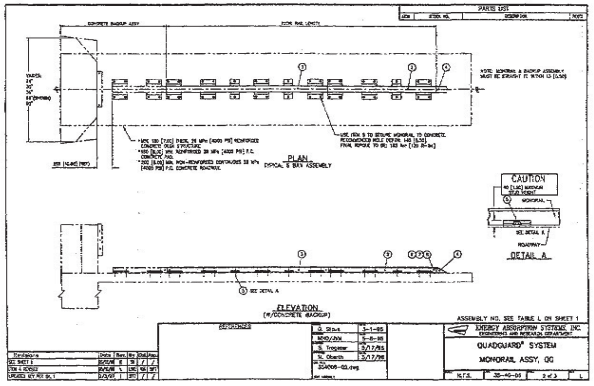

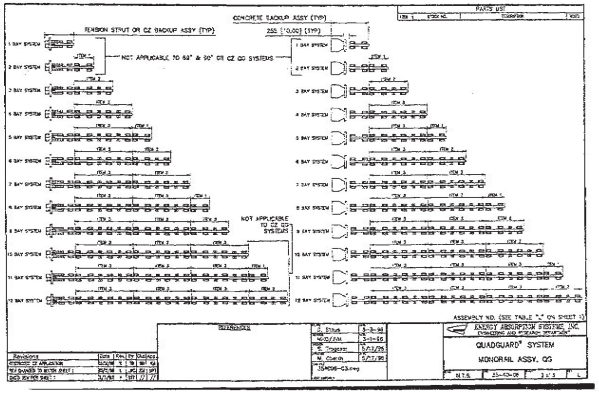

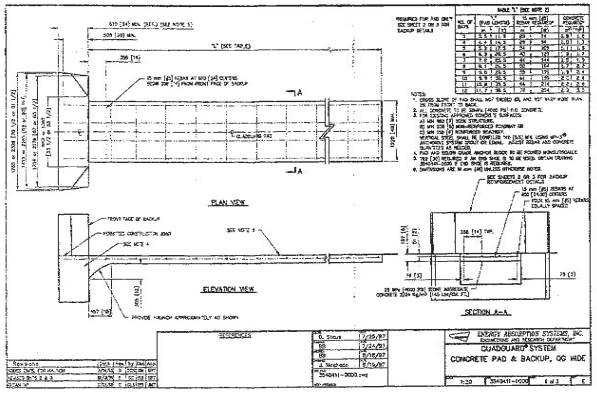

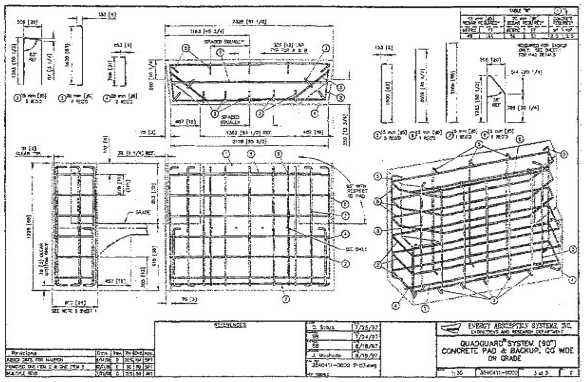

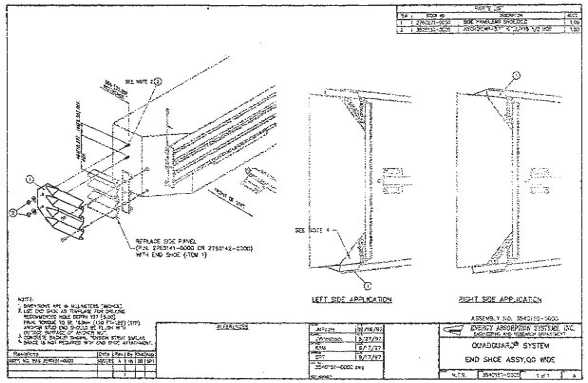

NOTES:

1. CRASH ATTENUATORS SHALL BE "QUADGUARD SYSTEMS FOR WIDE HAZARDS." THE SYSTEM SHALL BE A 3-BAY SYSTEM WITH A CONCRETE BACKUP.
2. DESIGN AND INSTALLATION INFORMATION CAN BE OBTAINED BY CALLING ENERGY ABSORPTION SYSTEMS, INC. AT 1-888-32-ENERG.
3. THE CRASH ATTENUATORS SHALL BE DESIGNED AND INSTALLED ACCORDING TO THE ABOVE DETAILS EXCEPT AS FOLLOWS: THE CONCRETE PAD SHALL BE DELETED ALLOWING ONLY THE CONSTRUCTION OF THE BELOW GRADE ANCHOR BLOCK (SEE "CONCRETE PAD AND BACKUP, QGWIDE" DETAIL). THE ANCHOR BOLTS SHALL BE TIED DIRECTLY INTO THE PROPOSED PAVEMENT.

ROBINSON ENGINEERING, LTD.
CONSULTING REGISTERED PROFESSIONAL ENGINEERS AND PROFESSIONAL LAND SURVEYORS
17000 SOUTH PARK AVENUE SOUTH HOLLAND ILLINOIS 60473
(708) 331-6700 FAX (708) 331-3926

© COPYRIGHT 2004

ILLINOIS DESIGN FIRM REGISTRATION NO. 184001128

REVISIONS

No	Date	Remarks

CRASH ATTENUATOR DETAILS
171ST STREET RECONSTRUCTION
WOOD STREET TO ASHLAND AVENUE

EAST HAZEL CREST, ILLINOIS

Drawn by:		Date:	8-17-04
Checked by:	JN	Scale:	NA
Sheet 124 of 153		Project No.	99-305.02

99305_02 DTLS-05

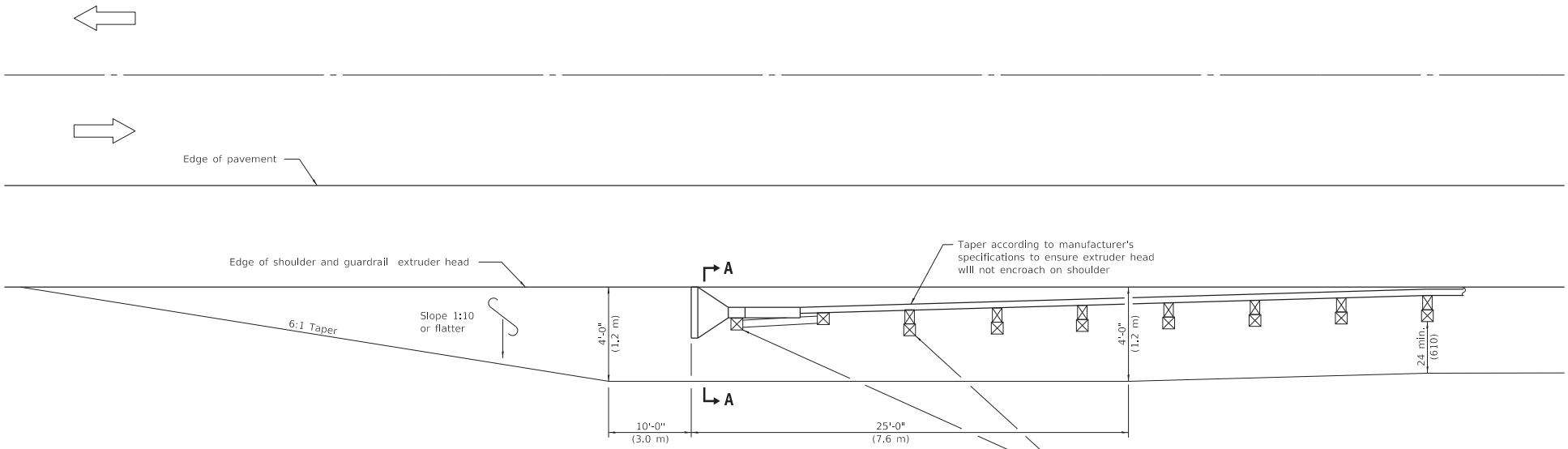

SHOULDER WIDENING TRANSITION FOR TANGENT TERMINAL

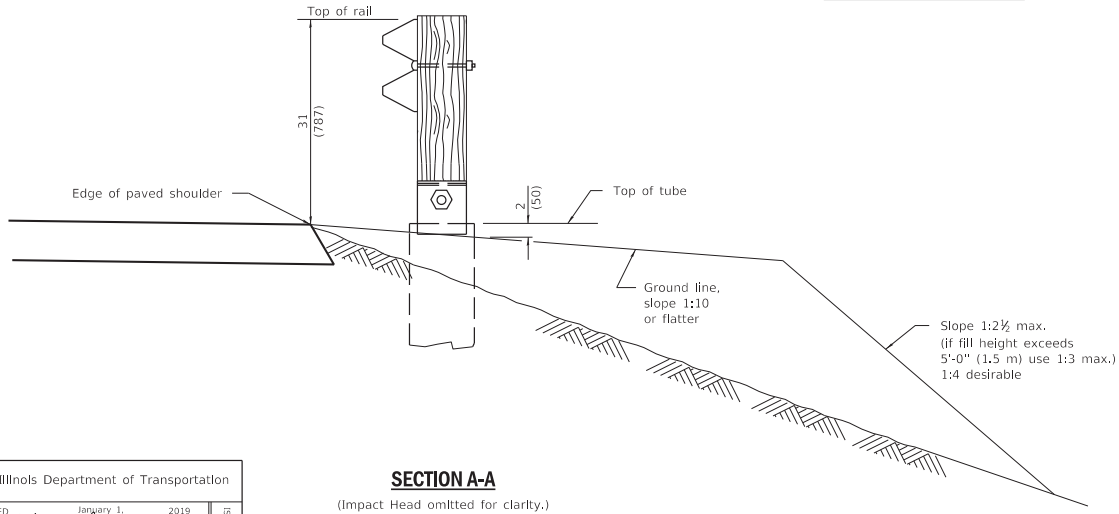

SECTION A-A

(Impact Head omitted for clarity.)

GENERAL NOTES

All slope ratios are expressed as units of vertical displacement to units of horizontal displacement (V:H).

All dimensions are in inches (millimeters) unless otherwise shown.

Illinois Department of Transportation

PASSED January 1, 2019
ENGINEER OF POLICY AND PROCEDURES

APPROVED January 1, 2019
ENGINEER OF DESIGN AND ENVIRONMENT

ISSUED 1-1-00

DATE	REVISIONS
1-1-19	Removed pay limits, Revised
	notes regarding the taper/flare
	and length of need point.
1-1-18	Omitted posts from 'Pay
	limits of other type'.

SHOULDER WIDENING FOR TYPE 1 (SPECIAL) GUARDRAIL TERMINALS

(Sheet 1 of 2)

STANDARD 630301-09

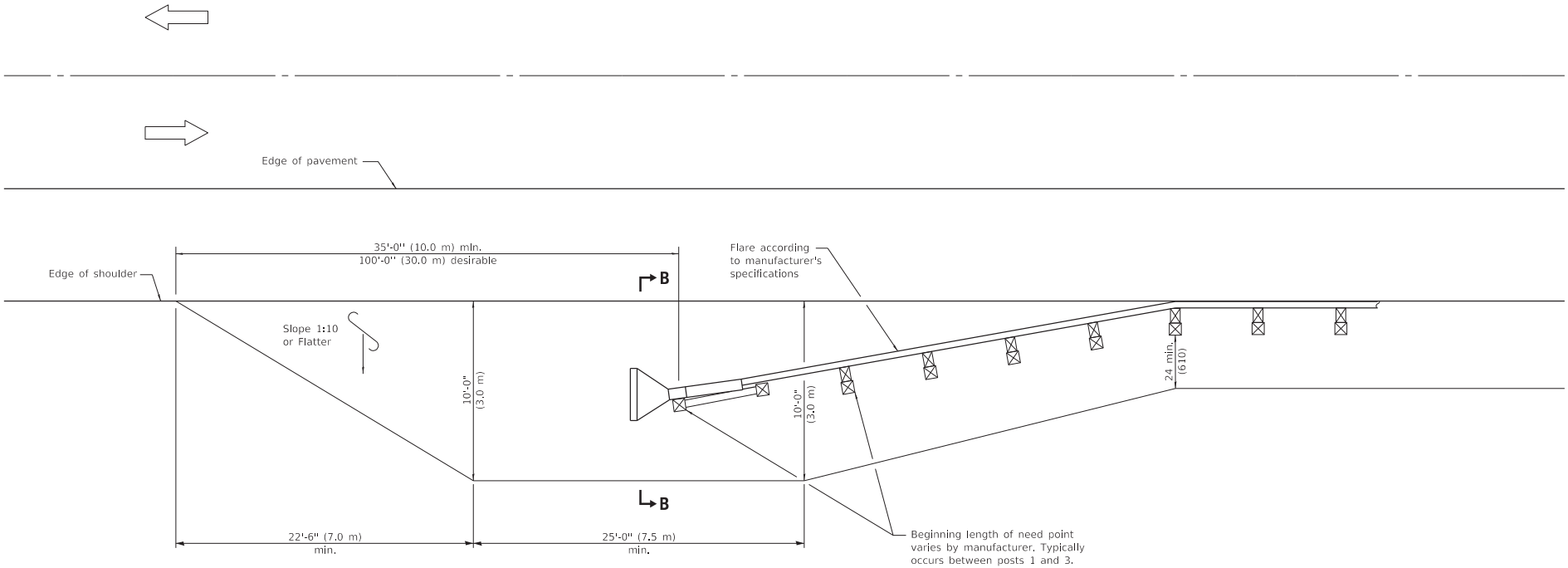

SHOULDER WIDENING TRANSITION FOR FLARED TERMINAL

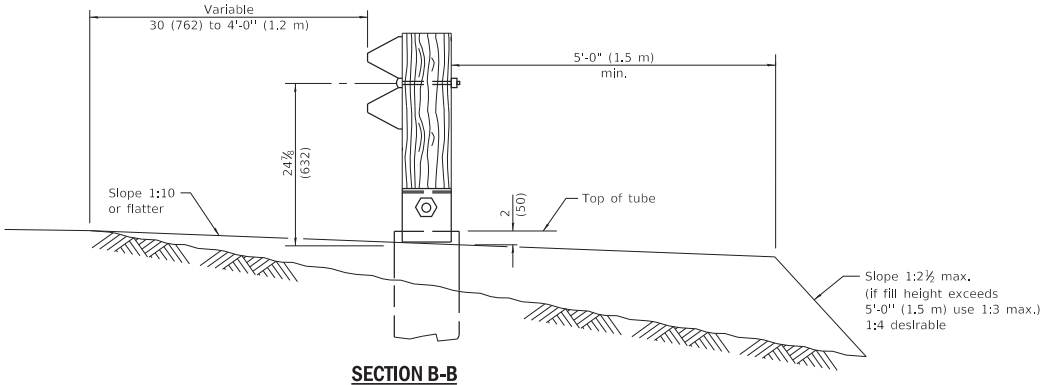

SECTION B-B
(Impact Head omitted for clarity.)

Illinois Department of Transportation

PASSED January 1, 2019
ENGINEER OF POLICY AND PROCEDURES

APPROVED January 1, 2019
ENGINEER OF DESIGN AND ENVIRONMENT

ISSUED 1-1-00

SHOULDER WIDENING FOR TYPE 1 (SPECIAL) GUARDRAIL TERMINALS

(Sheet 2 of 2)

STANDARD 630301-09

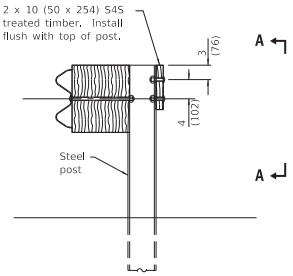

ELEVATION WITH W-BEAM GUARDRAIL

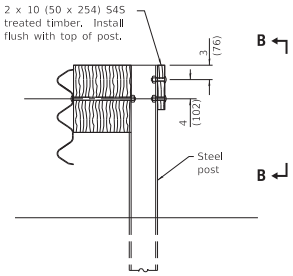

ELEVATION WITH THRIE-BEAM GUARDRAIL

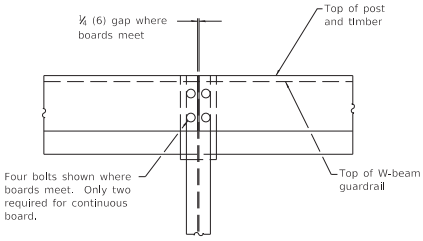

VIEW A-A

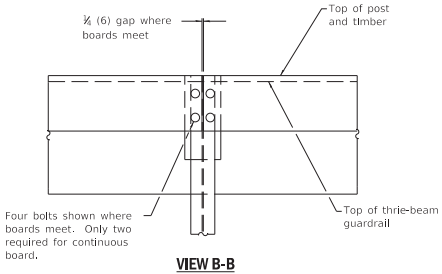

VIEW B-B

GENERAL NOTES

For details of guardrail elements not shown, see Standard 630001.

All dimensions are in inches (millimeters) unless otherwise shown.

Illinois Department of Transportation

PASSED January 1, 2017
ENGINEER OF POLICY AND PROCEDURES

APPROVED January 1, 2017
ENGINEER OF DESIGN AND ENVIRONMENT

ISSUED 1-1-17

DATE	REVISIONS
1-1-17	New standard.

BACK SIDE PROTECTION OF GUARDRAIL

STANDARD 630116

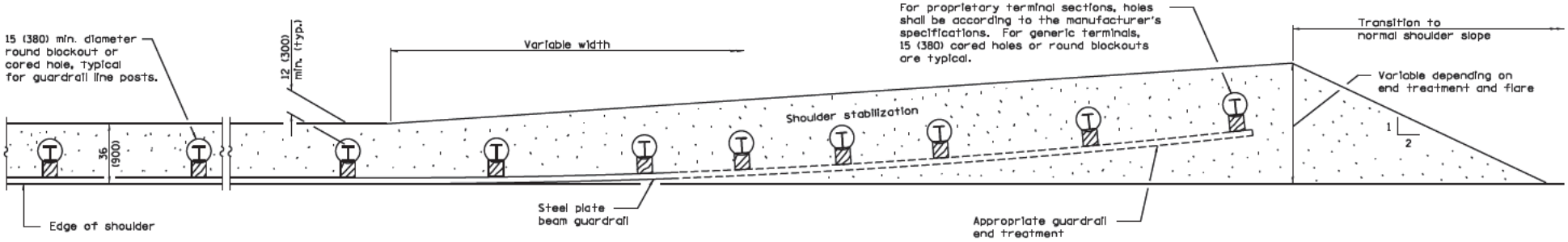

PLAN

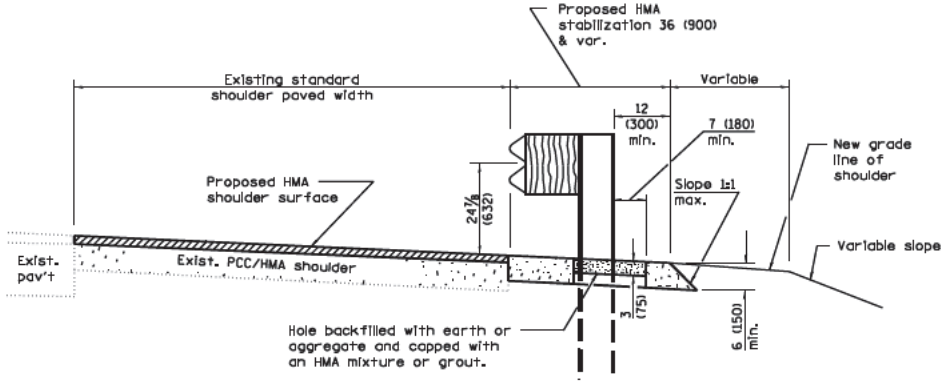

RESURFACING

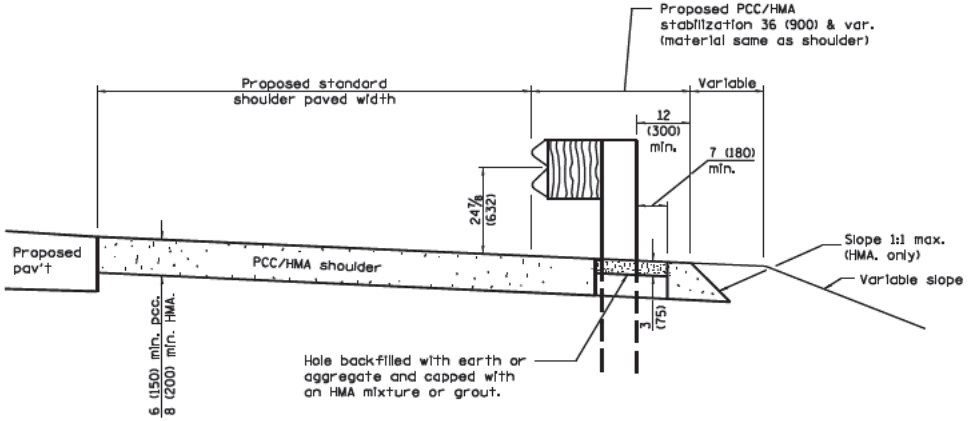

NEW CONSTRUCTION

GENERAL NOTES

See Standard 482001, 482006, or 483001 for details not shown.

All dimensions are in inches (millimeters) unless otherwise shown.

Illinois Department of Transportation

PASSED January 1, 2009
ENGINEER OF POLICY AND PROCEDURES

APPROVED January 1, 2009
ENGINEER OF DESIGN AND ENVIRONMENT

ISSUED 1-1-97

DATE	REVISIONS
1-1-09	Switched units to
	English (metric).
1-1-08	Removed reference to
	"bituminous mixture or
	grout".

PCC / HMA STABILIZATION AT STEEL PLATE BEAM GUARDRAIL

STANDARD 630201–06

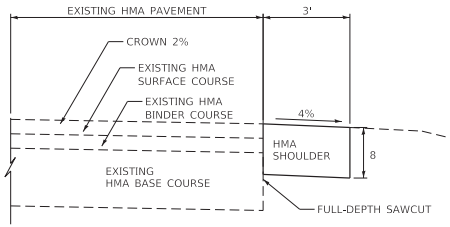

TYPICAL HOT-MIX ASPHALT SHOULDER

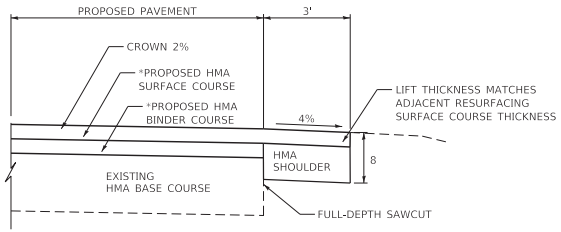

TYPICAL HOT-MIX ASPHALT SHOULDER

(CONSTRUCTED SIMULTANEOUSLY WITH PAVEMENT RESURFACING)

NOTES:

HOT-MIX ASPHALT SHOULDERS, 8" SHALL BE PLACED UNDERNEATH THE ENTIRE LENGTH OF ALL PROPOSED GUARDRAIL AND TRAFFIC BARRIER TERMINALS AND EXTEND 2 FEET BEYOND THE TERMINAL ENDS. THE WIDTH OF THE SHOULDER SHALL EXTEND ONE FOOT BEYOND EITHER SIDE OF THE POSTS FOR THE GUARDRAIL AND TRAFFIC BARRIER TERMINALS AND AS SHOWN ON THE PLANS. EARTH EXCAVATION NECESSARY FOR PLACEMENT OF THE SHOULDER SHALL BE CONSIDERED AS INCLUDED IN THE CONTRACT UNIT PRICE FOR HOT-MIX ASPHALT SHOULDERS, 8".

THE METHOD OF COMPACTION SHALL BE SUBMITTED TO AND APPROVED BY THE ENGINEER.

AS DIRECTED BY THE ENGINEER, THE CONTRACTOR SHALL PROTECT THE SHOULDER AREA WITH SUITABLE SAFETY DEVICES AS WORK PROGRESSES TO PREVENT VEHICULAR USE UNTIL THE AREA HAS COOLED SUFFICIENTLY TO PREVENT DEFORMATION OF THE SHOULDER SLOPE.

WHEN CONSTRUCTED ADJACENT TO EXISTING HMA PAVEMENT, THE EXISTING PAVEMENT SHALL BE SAW CUT TO PROVIDE A STRAIGHT EDGE FOR COMPACTION. SAWCUTTING AND MATERIAL NECESSARY FOR THE SHOULDER AREA CONSTRUCTION SHALL BE INCLUDED IN THE CONTRACT UNIT PRICE PER SQUARE YARD FOR HOT-MIX ASPHALT SHOULDERS, 8".

WHEN CONSTRUCTED SIMULTANEOUSLY WITH THE HMA SURFACE COURSE, THE MATERIALS NECESSARY FOR THE SHOULDER AREA CONSTRUCTION INCLUDING THE PROPOSED HMA SURFACE COURSE IN THE AREA OF HOT-MIX ASPHALT SHOUDER SHALL BE INCLUDED IN THE CONTRACT UNIT PRICE PER SQUARE YARD FOR HOT-MIX ASPHALT SHOULDERS, 8".

A SEPARATE TANDEM ROLLER MAY BE USED IN THE CONSTRUCTION OF THE HOT-MIX ASPHALT SHOULDER.

ALL DIMENSIONS ARE IN INCHES UNLESS OTHERWISE SHOWN.

1

LAKE-COOK RD
DONLEA RD
OTIS RD
BATEMAN RD
SUTTON RD
BRINKER RD
ELA RD
QUENTIN RD
ARLINGTON HEIGHTS RD
BRADWELL RD
WILKE RD
PENNY RD
ELA RD
EUCLID AVE
FREEMAN RD
MUNDHANK RD
CENTRAL RD
CENTRAL RD
SHOE FACTORY RD
BARTLETT RD
ROSELLE RD
BODE RD
SCHAUMBURG RD
PLUM GROVE RD
MEACHAM RD
LANDMEIER RD
ARLINGTON HEIGHTS RD
GIFFORD RD
WAPERVILLE RD
WISE RD
NERGE RD
WEST BARTLETT RD
DEVON AVE

2

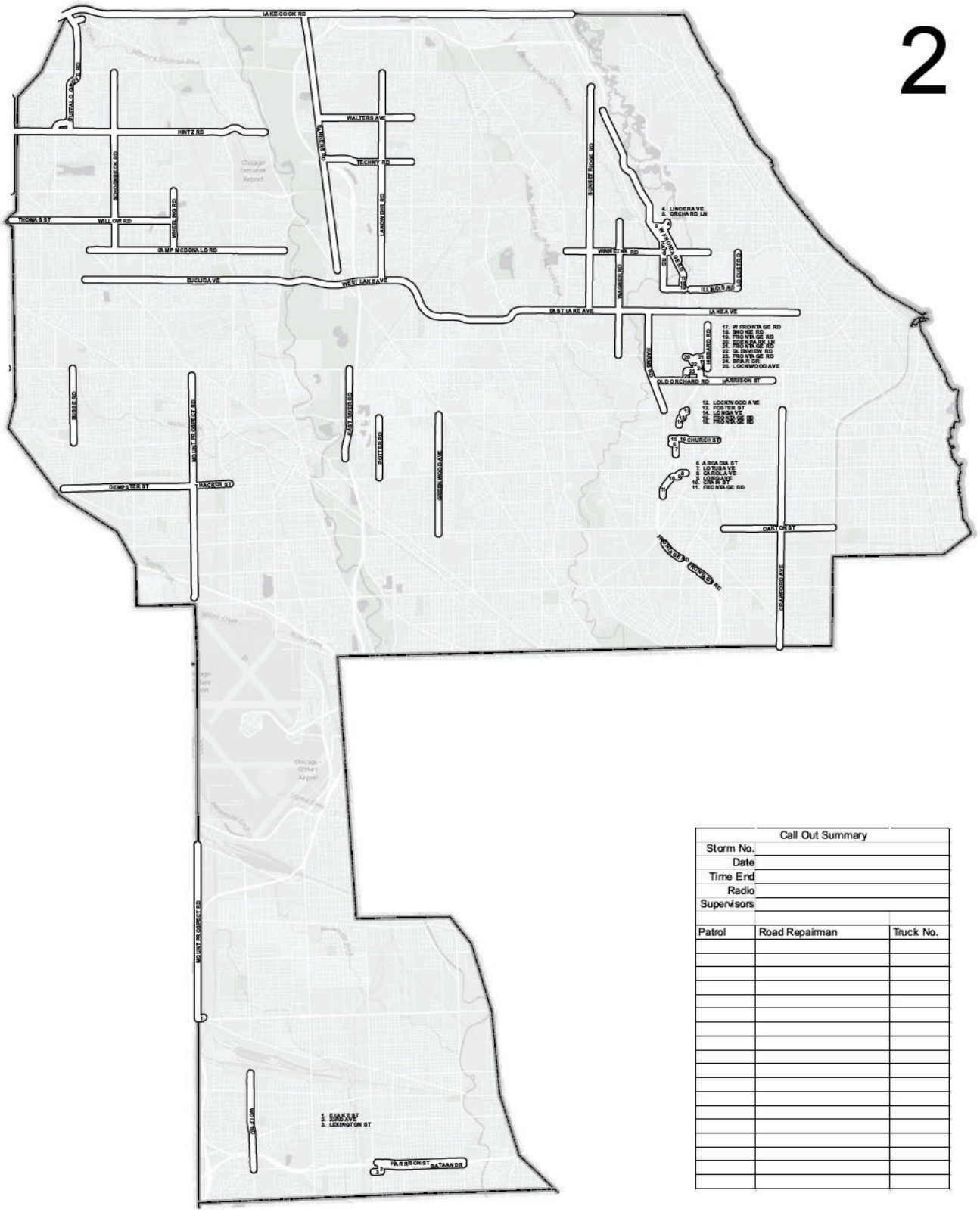

Call Out Summary		
Storm No.		
Date		
Time End		
Radio		
Supervisors		
Patrol	Road Repairman	Truck No.

4

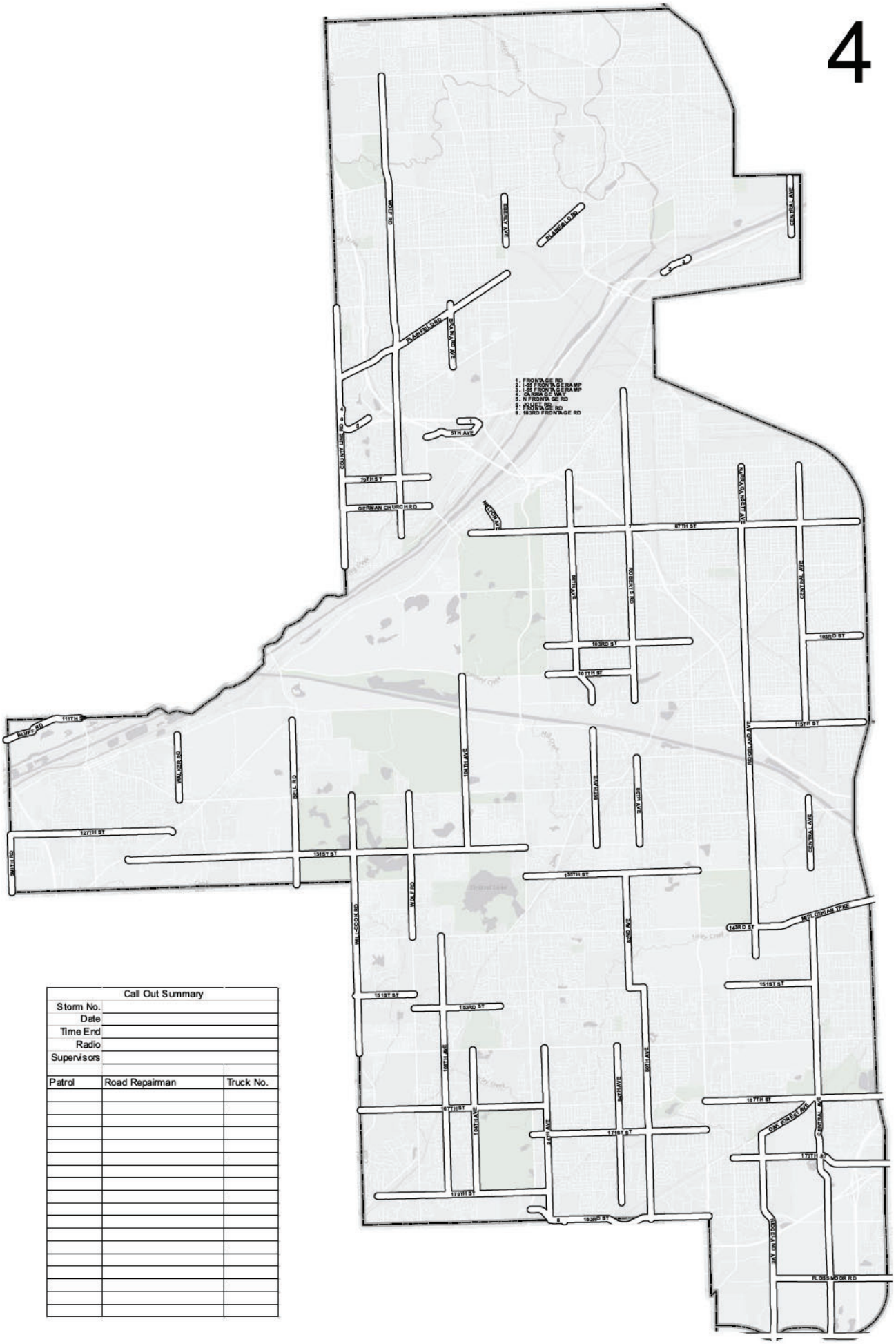

Call Out Summary		
Storm No.		
Date		
Time End		
Radio		
Supervisors		
Patrol	Road Repairman	Truck No.

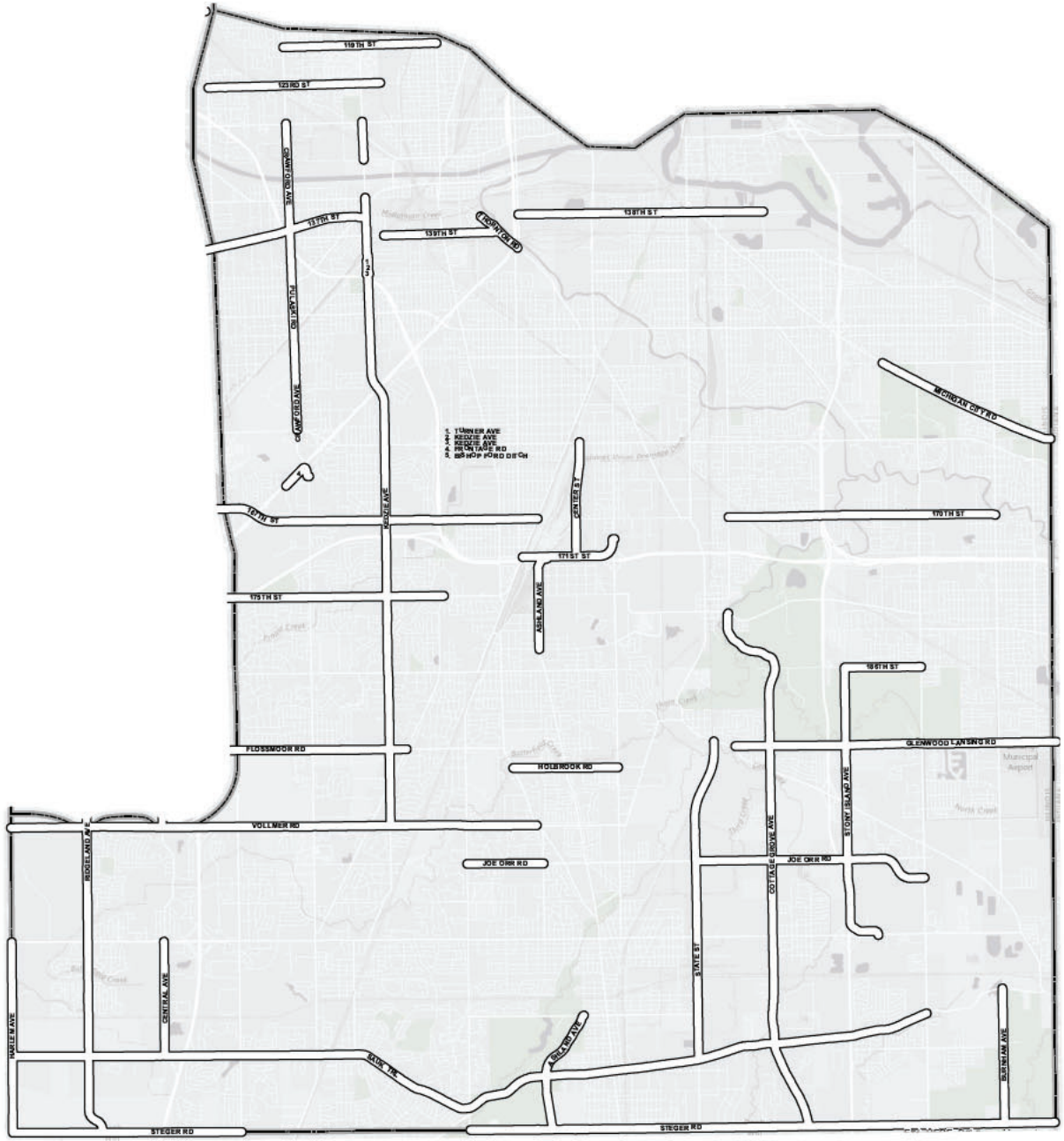
119TH ST
123RD ST
GRANT OND AVE
131TH ST
FULSHIRE RD
GRANTSBURG AVE
139TH ST
FRANKFORD RD
138TH ST
MONTAGUE RD
TUNNER AVE
REDDIE AVE
REDDIE AVE
MONTAGUE RD
BISHOP FORD DITCH
RIDGE AVE
GRITER ST
170TH ST
171ST ST
175TH ST
ASHLAND AVE
185TH ST
GLENWOOD LANSING RD
FLOSSMOOR RD
HOLBROOK RD
Municipal Airport
VOLLMER RD
JOE DIRK RD
RIDGELAND AVE
COTTAGE GROVE AVE
STONY ISLAND AVE
JOE DIRK RD
STATE ST
CENTRAL AVE
HARLEM AVE
SAUK TRL
ARLENA AVE
BARNHAM AVE
STEGER RD
STEGER RD

STEEL COST ADJUSTMENT (BDE)

Effective: April 2, 2004
Revised: January 1, 2022

Description. Steel cost adjustments will be made to provide additional compensation to the Contractor, or a credit to the Department, for fluctuations in steel prices when optioned by the Contractor. The bidder shall indicate with their bid whether or not this special provision will be part of the contract. Failure to indicate "Yes" for any item of work will make that item of steel exempt from steel cost adjustment.

Types of Steel Products. An adjustment will be made for fluctuations in the cost of steel used in the manufacture of the following items:

Metal Piling (excluding temporary sheet piling) Structural Steel
Reinforcing Steel

Other steel materials such as dowel bars, tie bars, welded reinforcement, guardrail, steel traffic signal and light poles, towers and mast arms, metal railings (excluding wire fence), and frames and grates will be subject to a steel cost adjustment when the pay items they are used in have a contract value of $10,000 or greater.

The adjustments shall apply to the above items when they are part of the original proposed construction, or added as extra work and paid for by agreed unit prices. The adjustments shall not apply when the item is added as extra work and paid for at a lump sum price or by force account.

Documentation. Sufficient documentation shall be furnished to the Engineer to verify the following:

(a) The dates and quantity of steel, in lb (kg), shipped from the mill to the fabricator.

(b) The quantity of steel, in lb (kg), incorporated into the various items of work covered by this special provision. The Department reserves the right to verify submitted quantities.

Method of Adjustment. Steel cost adjustments will be computed as follows:

SCA = Q X D

Where: SCA = steel cost adjustment, in dollars
Q = quantity of steel incorporated into the work, in lb (kg) D = price factor, in dollars per lb (kg)

$D = MPI_M - MPI_L$

Where: MPI_M = The Materials Cost Index for steel as published by the Engineering News- Record for the month the steel is shipped from the mill. The indices will be converted from dollars per 100 lb to dollars per lb (kg).

MPI_L = The Materials Cost Index for steel as published by the Engineering News- Record for the month prior to the letting for work paid for at the contract price; or for the month the agreed unit price letter is submitted by the Contractor for extra work paid for by agreed unit price,. The indices will be converted from dollars per 100 lb to dollars per lb (kg).

The unit weights (masses) of steel that will be used to calculate the steel cost adjustment for the various items are shown in the attached table.

No steel cost adjustment will be made for any products manufactured from steel having a mill shipping date prior to the letting date.

If the Contractor fails to provide the required documentation, the method of adjustment will be calculated as described above; however, the MPI_M will be based on the date the steel arrives at the job site. In this case, an adjustment will only be made when there is a decrease in steel costs.

Basis of Payment. Steel cost adjustments may be positive or negative but will only be made when there is a difference between the MPI_L and MPI_M in excess of five percent, as calculated by:

Percent Difference = $\{(MPI_L - MPI_M) \square\square MPI_L\} \square\square 100$

Steel cost adjustments will be calculated by the Engineer and will be paid or deducted when all other contract requirements for the items of work are satisfied. Adjustments will only be made for fluctuations in the cost of the steel as described herein. No adjustment will be made for changes in the cost of manufacturing, fabrication, shipping, storage, etc.

The adjustments shall not apply during contract time subject to liquidated damages for completion of the entire contract.

Item	Unit Mass (Weight)
Metal Piling (excluding temporary sheet piling)	
Furnishing Metal Pile Shells 12 in. (305 mm), 0.179 in. (3.80 mm) wall thickness)	23 lb/ft (34 kg/m)
Furnishing Metal Pile Shells 12 in. (305 mm), 0.250 in. (6.35 mm) wall thickness)	32 lb/ft (48 kg/m)
Furnishing Metal Pile Shells 14 in. (356 mm), 0.250 in. (6.35 mm) wall thickness)	37 lb/ft (55 kg/m)
Other piling	See plans
Structural Steel	See plans for weights (masses)
Reinforcing Steel	See plans for weights (masses)
Dowel Bars and Tie Bars	6 lb (3 kg) each
Welded Reinforcement	63 lb/100 sq ft (310 kg/sq m)
Guardrail	
Steel Plate Beam Guardrail, Type A w/steel posts	20 lb/ft (30 kg/m)
Steel Plate Beam Guardrail, Type B w/steel posts	30 lb/ft (45 kg/m)
Steel Plate Beam Guardrail, Types A and B w/wood posts	8 lb/ft (12 kg/m)
Steel Plate Beam Guardrail, Type 2	305 lb (140 kg) each
Steel Plate Beam Guardrail, Type 6	1260 lb (570 kg) each
Traffic Barrier Terminal, Type 1 Special (Tangent)	730 lb (330 kg) each
Traffic Barrier Terminal, Type 1 Special (Flared)	410 lb (185 kg) each
Steel Traffic Signal and Light Poles, Towers and Mast Arms	
Traffic Signal Post	11 lb/ft (16 kg/m)
Light Pole, Tenon Mount and Twin Mount, 30 - 40 ft (9 – 12 m)	14 lb/ft (21 kg/m)
Light Pole, Tenon Mount and Twin Mount, 45 - 55 ft (13.5 – 16.5 m)	21 lb/ft (31 kg/m)
Light Pole w/Mast Arm, 30 - 50 ft (9 – 15.2 m)	13 lb/ft (19 kg/m)
Light Pole w/Mast Arm, 55 - 60 ft (16.5 – 18 m)	19 lb/ft (28 kg/m)
Light Tower w/Luminaire Mount, 80 - 110 ft (24 – 33.5 m)	31 lb/ft (46 kg/m)
Light Tower w/Luminaire Mount, 120 - 140 ft (36.5 – 42.5 m)	65 lb/ft (97 kg/m)
Light Tower w/Luminaire Mount, 150 - 160 ft (45.5 – 48.5 m)	80 lb/ft (119 kg/m)
Metal Railings (excluding wire fence)	
Steel Railing, Type SM	64 lb/ft (95 kg/m)
Steel Railing, Type S-1	39 lb/ft (58 kg/m)
Steel Railing, Type T-1	53 lb/ft (79 kg/m)
Steel Bridge Rail	52 lb/ft (77 kg/m)
Frames and Grates	
Frame	250 lb (115 kg)
Lids and Grates	150 lb (70 kg)

EXHIBIT I

Instructions for Submitting an Electronic Bid

INSTRUCTIONS FOR SUBMITTING AN ELECTRONIC BID/PROPOSAL/QUALIFICATION

For electronic submissions, firms shall use the following link to submit Bids/Proposals/Qualifications electronically:

https://cookcountyil.bonfirehub.com/portal/?tab=openOpportunities

Follow the steps listed in the below article to access the opportunity and submit your bid/proposal.

https://support.gobonfire.com/hc/en-us/articles/360011034814-Creating-and-Uploading-a-Submission-for-Vendors-

There is also a video on Vendor Registration & Submission at this link:

https://support.gobonfire.com/hc/en-us/articles/203903356-Vendor-Registration-and-Submission-

If you have questions or technical issues accessing or submitting your bid/proposal, please reach out to Bonfire at:

support@gobonfire.com

1 (800) 354 8010 Extension #2

Exhibit II

Identification of Subcontractors/Supplier/Subconsultant Form

Contract #: 2557-03184

OCPO ONLY:	
	Disqualification
X	Check Complete

Cook County
Office of the Chief Procurement Officer
Identification of Subcontractor/Supplier/Subconsultant Form

The Bidder/Proposer/Respondent ("the Contractor") will fully complete and execute and submit an Identification of Subcontractor/Supplier/Subconsultant Form ("ISF") with each Bid, Request for Proposal, and Request for Qualification. **The Contractor must complete the ISF for each Subcontractor, Supplier or Subconsultant which shall be used on the Contract.** In the event that there are any changes in the utilization of Subcontractors, Suppliers or Subconsultants, the Contractor must file an updated ISF.

Bid/RFP/RFQ No.: 2557-03184	Date: 5/21/25
Total Bid or Proposal Amount: $2,282,197.25	Contract Title: Guardrail & Traffic Barrier Terminals
Contractor: Midwest Fence Corporation	Subcontractor/Supplier/ Subconsultant to be added or substitute: Valtir, LLC
Authorized Contact for Contractor: Everett J. Bell	Authorized Contact for Subcontractor/Supplier/ Subconsultant: Tommy Aslin
Email Address (Contractor): ebell@mwfence.com	Email Address (Subcontractor): tommy.aslin@valtir.com
Company Address (Contractor): 900 N. Kedzie Ave	Company Address (Subcontractor): 15601 Dallas Parkway, Suite 525
City, State and Zip (Contractor): Chicago, IL 60651	City, State and Zip (Subcontractor): Addison, TX 75001
Telephone and Fax (Contractor): 773-722-6616	Telephone and Fax (Subcontractor): 214-589-8423
Estimated Start and Completion Dates (Contractor): 7/1/25 - 7/1/27	Estimated Start and Completion Dates (Subcontractor): 7/1/25 - 7/1/27

Note: Upon request, a copy of all written subcontractor agreements must be provided to the OCPO.

Description of Services or Supplies	Total Price of Subcontract for Services or Supplies
Guardrail Supplier	499,757.00

The subcontract documents will incorporate all requirements of the Contract awarded to the Contractor as applicable. The subcontract will in no way hinder the Subcontractor/Supplier/Subconsultant from maintaining its progress on any other contract on which it is either a Subcontractor/Supplier/Subconsultant or principal contractor. This disclosure is made with the understanding that the Contractor is not under any circumstances relieved of its abilities and obligations, and is responsible for the organization, performance, and quality of work. **This form does not approve any proposed changes, revisions or modifications to the contract approved MBE/WBE Utilization Plan. Any changes to the contract's approved MBE/WBE/Utilization Plan must be submitted to the Office of the Contract Compliance.**

Midwest Fence Corporation
Contractor

Everett J. Bell
Name

Secretary
Title

Everett J. Bell
Prime Contractor Signature

5/21/25
Date

EXHIBIT III

Electronic Payables Program Form

OFFICE OF THE COOK COUNTY COMPTROLLER
ELECTRONIC PAYABLES PROGRAM ("E-PAYABLES")

FOR INFORMATION PURPOSES ONLY

This document describes the Office of the Cook County Comptroller's Electronic Payables Program ("E-Payables").
If you wish to participate in E-Payables, please contact the Cook County Comptroller's Office, Accounts Payable, 118 N. Clark Street, Room 500, Chicago, IL 60602.

DESCRIPTION
To increase payment efficiency and timeliness, we have introduced E-Payables program, a new payment initiative to our accounts payable model. This new initiative utilizes a Visa purchasing card and operates through the Visa payment network. This is County's preferred method of payment and your participation in our Visa purchasing card program will provide mutual benefits both to your organization and ours.

As a vendor, you may experience the following benefits by accepting this new payment type:

- Improved cash flow and accelerated payment
- Reduced paperwork and a more streamlined accounts receivable process
- Elimination of stop payment issues
- Reduced payment delays
- Reduced costs for handling paper checks
- Payments settled directly to your merchant account

There are two options within this initiative:

1. Dedicated Credit Card – "PULL" Settlement
For this option, you will have an assigned dedicated credit card to be used for each payment. You will provide a point of contact within your organization who will keep credit card information on file. Each time a payment is made, you will receive a remittance advice via email detailing the invoices being paid. Each time you receive a remittance advice, you will process payments in the same manner you process credit card transactions today.

2. One-Time Use Credit Card – "SUGA" Settlement
For this option, you will provide a point of contact within your organization who will receive an email notification authorizing you to process payments in the same manner you process credit card transactions today. Each time payment is made, you will receive a remittance advice, via email, detailing the invoices being paid. Also, each time you receive a remittance advice, you will receive a new, unique credit card number. This option is ideal for suppliers who are unable to keep credit card account information on file.

REMAINDER OF PAGE INTENTIONALLY LEFT BLANK

EXHIBIT IV

Preference for Veteran's Business Enterprise and Service-Disabled Veteran's Business Enterprise Form

CONTRACT NO. 2557-03184

VETERAN'S PREFERENCE FOR VBE AND SDVBE
INSTRUCTIONS

In accordance with Section 34-236(b) of the Cook County Procurement Code, the Chief Procurement Officer ("CPO") shall give a preference of **five percent of the amount of the Contract** to a Responsible and Responsive Veterans Owned Business Enterprise (VBE) and Service Disabled Veterans Business Enterprise (SDVBE) requesting a preference for Bids. ***All Bidders who are requesting this preference must complete the form, and attach a copy of its certification. Prior to applying the five percent preference, the CPO must receive approval from the Contract Compliance Director (CCD) that the Bidder is a qualified VBE or SDVBE.***

DEFINITIONS

Veteran-owned Business Enterprise (VBE) means a small business (i) that is at least 51 percent owned, controlled and managed by one or more Eligible Veterans or in the case of a corporation, at least 51 percent or more of the stock of which is owned, controlled and managed by one or more Eligible Veterans; (ii) that has its home office in Illinois, as certified by the Contract Compliance Director (CCD) under policies and procedures promulgated by the CCD.

Eligible Veteran means a person who (i) has been either a member of the armed forces of the United States or, while a citizen of the United States, was a member of the armed forces of allies of the United States in time of hostilities with a foreign country and (ii) has served under one or more of the following conditions: (a) the veteran served a total of at least 6 months; (b) the veteran served for the duration of hostilities regardless of the length of the engagement; (c) the veteran was discharged on the basis of hardship; or (d) the veteran was released from active duty because of a service connected disability and was discharged under honorable conditions.

Armed forces of the United States means the United States Army, Navy, Air Force, Marine Corps, Coast Guard or service in active duty as defined under 38 U.S.C. Section 101. Service in the Merchant Marine that constitutes active duty under Section 401 of federal Public Act 95-202 shall also be considered service in the armed forces for purposes of this Division.

Service-Disabled Veteran-owned Business Enterprise (SDVBE) means a small business (i) that is at least 51 percent owned, controlled, and managed by one or more qualified service disabled veterans or in the case of a corporation, at least 51 percent or more of the stock of which is owned, controlled and managed by one or more Service Disabled Veterans; (ii) that has its home office in Illinois, as certified by the CCD under policies and procedures promulgated by the CCD.

Service-Disabled Veteran means an Eligible Veteran who has been found to have 10 percent or more service connected disability by the United States Department of Veterans Affairs or the United States Department of Defense.

Service-connected disability means a disability incurred in the line of duty in the active military, naval or air service as described in 38 U.S.C. 101(16).

Small Business means a small business as defined by the U.S. Small Business Administration, pursuant to the business size standards found in 13 CFR Part 121, as related to the nature of the work the Person seeks to perform on Contracts. A Person is not an eligible small business enterprise in any calendar fiscal year in which its gross receipts, averaged over the Person's previous five fiscal years, exceed the size standards of 13 CFR Part 121.

REQUEST FOR PREFERENCE

☐ Bidder is requesting to receive a preference as a VBE. By requesting this preference, Bidder certifies that it meets the definition of a VBE, as set forth above and has included a copy of its certification.

☐ Bidder is requesting to receive a preference as a SDVBE. By requesting this preference, Bidder certifies that it meets The definition of a SDVBE, as set forth above and has included a copy of its certification.

NOT APPLICABLE
Bidder (please print or type)

Signature

ebell@mwfence.com
E-mail address

Subscribed to and sworn before me this 10 day of September, 2025.

X
Notary Public Signature

Secretary
Title

9/10/2025
Date

773-584-6455
Phone Number

My commission expires:

OFFICIAL SEAL
JENNIFER BELL
NOTARY PUBLIC, STATE OF ILLINOIS
My Commission Expires 01-23-2027

Notary Seal

EXHIBIT V
SOCIAL ENTERPRISE PREFERENCE FORM

SOCIAL ENTERPRISE PREFERENCE

INSTRUCTIONS

In accordance with Section 34-241 of the Cook County Procurement Code, the Chief Procurement Officer ("CPO") shall give a preference of five percent (5%) to a Responsible and Responsive Social Enterprise, as defined by the Cook County Procurement Code, requesting a preference for Bids. **All Bidders who are requesting this preference must fully complete this form and supply all requested information. Failure to provide fully comply with these instructions will result in the preference not being granted.** The CPO reserves the right to request additional information to ascertain a Bidder's status as a Social Enterprise.

DEFINITIONS

County Marketplace means the six-county region, currently the counties of Cook, DuPage, Kane, Lake, McHenry, and Will.

Disadvantaged refers to individuals who are mentally, physically, economically, or educationally disadvantaged, including, but not limited to, individuals who are living below the poverty line, developmentally disabled, mentally ill, substance abusers, recovering substance abusers, elderly and in need of hospice care, gang members, on welfare, or people with arrest or conviction records.

Earned Revenue Strategies means revenue realized by a non-profit private sector entity, or a business unit of a private sector entity excluding government grants, government contracts and philanthropic support.

Social Enterprise means a Person which has its principal place of business and a majority of its regular, full-time work force located within the County Marketplace on the date a bid is submitted, and which is:

1. An Illinois benefit corporation subject to the Benefit Corporation Act (805 ILCS 40/1 et seq.);
2. An Illinois low-profit limited liability company subject to Section 1-26 of the Limited Liability Company Act (805 ILCS 180/1-26); or
3. A nonprofit entity, a private-sector entity, or any business unit of a private sector entity which maintains separate books and records which (a) uses earned revenue strategies, either exclusively as a business or as a significant part (at least 51%) of earned revenue, and (b) directly addresses social needs either (1) through its goods and/or services or (2) by employing a workforce of which 51% are disadvantaged, or (3) both. **At any time, upon request of the County, for a period of three (3) years following the termination of the contract, Bidder must provide documentation that it meets the requirements of this provision.**

REQUEST FOR PREFERENCE

☐ Bidder is requesting to receive the Social Enterprise Preference as an Illinois Benefit Corporation. By requesting this preference, the Bidder certifies that is it is an Illinois Benefit Corporation and has included a true and correct copy of its Articles of Incorporation (and any Articles of Amendment thereto) and most recent Benefit Report pursuant to 805 ILCS 40/5.01

☐ Bidder is requesting to receive the Social Enterprise Preference as an Illinois Low Profit Limited Liability Company ("L3C"). By requesting this preference, the Bidder certifies that it is an L3C and has included a true and correct copy of its Articles of Organization (and any Articles of Amendment thereto) and its most recent annual report filed with the Attorney General pursuant to 805 ILCS 180/1-26(d) and 760 ILCS 55/7.

☐ Bidder is requesting to receive the Social Enterprise Preference as an social enterprise that is neither a Benefit Corporation or an L3C, but uses earned revenue strategies, either exclusively as a business or as a significant part of a nonprofit's revenue stream and directly addresses social needs either (1) through its goods and/or services or (2) by employing a workforce, of which 51% are disadvantaged, or (3) both. By requesting this preference, the Bidder certifies it meets this definition and has supplied a true and correct copy of: (1) Articles of Incorporation or Organization (and any Articles of Amendment thereto, as applicable); and (2) a sworn statement setting forth how its goods and services directly impact the social needs of people who are disadvantaged and/or that at least 51% of its direct labor in its past fiscal year was provided by persons who are disadvantaged.

NOT APPLICABLE
Bidder (please print or type)

Signature

ebell@mwfence.com
Email address

Secretary
Title

9/10/2025
Date

773-584-6455
Phone Number

Subscribed to and sworn before me
This 10 day of September, 2025.

Notary Public Signature

My Commission Expires:

Notary Seal

OFFICIAL SEAL
JENNIFER BELL
NOTARY PUBLIC, STATE OF ILLINOIS
My Commission Expires 01-23-2027

EXHIBIT VI

Veteran's Workplace Preference Public Works Contracts Form

AFFIDAVIT
VETERAN'S WORKPLACE PREFERENCE PUBLIC WORKS CONTRACTS

INSTRUCTIONS

In accordance with Section 34-236(a) of the Cook County Procurement Code, the Chief Procurement Officer ("CPO") shall give a preference of **one percent of the amount of the Contract** to a Responsible and Responsive Contractor for a Public Works Contract when such Contractor has committed by affidavit to utilize Eligible Veterans for at least five percent of the hours worked under such Contract. Failure to utilize Eligible Veterans in accordance with the affidavit will result in breach of contract. ***All Bidders who are requesting this preference must complete this Affidavit.***

DEFINITIONS

Eligible Veteran means a person who (i) has been either a member of the armed forces of the United States or, while a citizen of the United States, was a member of the armed forces of allies of the United States in time of hostilities with a foreign country and (ii) has served under one or more of the following conditions: (a) the veteran served a total of at least 6 months; (b) the veteran served for the duration of hostilities regardless of the length of the engagement; (c) the veteran was discharged on the basis of hardship; or (d) the veteran was released from active duty because of a service connected disability and was discharged under honorable conditions.

Armed forces of the United States means the United States Army, Navy, Air Force, Marine Corps, Coast Guard or service in active duty as defined under 38 U.S.C. Section 101. Service in the Merchant Marine that constitutes active duty under Section 401 of federal Public Act 95-202 shall also be considered service in the armed forces for purposes of this Division.

Public Works means all fixed works constructed or demolished by the County, or paid for wholly or in part out of public funds administered by the County. "Public Works" as defined herein includes all projects financed in whole or in part with bonds, grants, loans, or other funds made available by or through federal or State government, or the County. "Public Works" does not include projects undertaken by the owner at an owner-occupied single-family residence or at an owner-occupied unit of a multifamily residence. "Public Works" includes any maintenance, repair, assembly, or disassembly work performed on equipment whether owned, leased, or rented.

I, _____, being first duly sworn, do depose and state as follows:

1. I am the authorized representative and I have the authority to make this Affidavit for and on behalf of the Bidder.

2. The Bidder is requesting the CPO grant a preference of one percent of the amount of the Contract in accordance with Section 34-236(a) of the Cook Procurement Code, as set forth above.

3. In accordance with the Cook County Procurement Code, the Bidder shall commit to utilize Eligible Veterans for at least five percent of the hours worked under the Contract. The Eligible Veterans must be employed directly by the Bidder.

4. The Bidder shall be solely responsible for requesting all persons to provide Bidder with appropriate documentation to ensure that such person(s) is an Eligible Veteran, as defined above. Bidder certifies, that by seeking this preference, it shall maintain appropriate documentation, including payroll records, which show the number of hours worked by Eligible Veterans.

5. The Bidder certifies, affirms and acknowledges that the failure to utilize Eligible Veterans in accordance with this Affidavit will result in a breach of contract, which will allow the County to seek all rights and remedies as set forth in the Contract and any other appropriate remedies available in equity or at law.

NOT APPLICABLE
Bidder (please print or type)

Signature

ebell@mwfence.com
E-mail address

Subscribed to and sworn before me this 10 day of September 2025.

X
Notary Public Signature

Secretary
Title

9/10/2025
Date

773-584-6455
Phone Number

My commission expires:

OFFICIAL SEAL
JENNIFER BELL
NOTARY PUBLIC, STATE OF ILLINOIS
My Commission Expires 01-23-2027

Notary Seal

EXHIBIT VII

Preference for Businesses Owned by People with Disabilities Form

Preference for Businesses Owned by People with Disabilities Form

INSTRUCTIONS

In accordance with Section 34-236(b) of the Cook County Procurement Code, the Chief Procurement Officer ("CPO") shall give a preference of **five percent of the amount of the Contract** to a Responsible and Person with Disabilities Owned Business Enterprise ("PDBE") requesting a preference for Bids. **All Bidders who are requesting this preference must complete the form and attach a copy of its certification. Prior to applying the five percent preference, the CPO must receive approval from the Contract Compliance Director (CCD) that the Bidder is a qualified PDBE.**

DEFINITIONS

Persons with Disabilities Owned Business Enterprise (PDBE) means a small business (i) that is at least 51 percent owned. controlled and managed by one or more Persons with a Disability; or in the case of a corporation, at least 51 percent or more of the stock of which is owned, controlled, and managed by one or more Persons with a Disability; (ii) that has its home office in Illinois, as certified by the CCD under policies and procedures promulgated by the CCD.

Disability or Disabled means, with respect to an individual, a physical or mental impairment that substantially limits one or more of the major life activities of the individual, a record of physical or mental impairment that substantially limits one or more of the major life activities of the individual, or being regarded as an individual with a physical or mental impairment that substantially limits one or more of the major life activities of the individual.

Small Business means a small business as defined by the U.S. Small Business Administration, pursuant to the business size standards found in 13 CFR Part 121, as related to the nature of the work the Person seeks to perform on Contracts. A Person is not an eligible small business enterprise in any calendar fiscal year in which its gross receipts, averaged over the Person's previous five fiscal years, exceed the size standards of 13 CFR Part 121.

REQUEST FOR PREFERENCE

☐ Bidder is requesting to receive a preference as a PDBE. By requesting this preference, Bidder certifies that it meets the definition of a PDBE, as set forth above and has included a copy of its certification.

NOT APPLICABLE
Bidder (please print or type)

Signature

ebell@mwfence.com
E-mail address

Secretary
Title

9/10/2025
Date

773-584-6455
Phone Number

Subscribed to and sworn before me
this 10 day of Sept., 2025.

X
Notary Public Signature

My commission expires:

OFFICIAL SEAL
JENNIFER BELL
NOTARY PUBLIC, STATE OF ILLINOIS
My Commission Expires 01-23-2027

Notary Seal

EXHIBIT VIII

Board Approval (If Applicable)

Board of Commissioners of Cook County

118 North Clark Street
Chicago, IL

Master

File Number: 25-3107

File ID:	25-3107	**Type:**	Contract (Highway)	**Status:**	Approved
Version:	1	**Presenters:**		**Agency:**	Transportation Committee
				File Created:	06/06/2025
File Name:	Contract for Guardrail and Traffic Barrier Terminals Replacement and Repair - co. number 2557-03184			**Final Action:**	09/18/2025

genda Item: **PROPOSED CONTRACT (TRANSPORTATION AND HIGHWAYS)**

Department(s): Transportation and Highways

Vendor: Midwest Fence Corporation, Chicago, Illinois

Request: Authorization for the Chief Procurement Officer to enter into and execute contract.

Good(s) or Service(s): Guardrail and Traffic Barrier Terminals Replacement and Repairs

Location: Countywide

Section: N/A

Contract Value: $2,282,197.25

Contract period: 9/1/2025 - 8/31/2027 with one (1), two (2) year renewal option

Contract Utilization: The Contract specific goal set on this contract is Zero.

Potential Fiscal Year Budget Impact: FY 2025 $300,000.00; FY 2026 $1,000,000.00; FY 2027 $982,197.25

Accounts: Motor Fuel Tax: 11300.1500.29150.540370

Contract Number(s): 2557-03184

Summary: This contract will allow the Department of Transportation and Highways to provide the maintenance, upgrading, and replacement of damaged guardrails and traffic barrier terminals as needed throughout Cook County. Guardrails are an essential part of our Highway system for the safety of motorists and the public.

The vendor was selected pursuant to a publicly advertised Invitation for Bids (IFB) in accordance with the Cook County Procurement Code. Midwest Fence Corporation was the lowest, responsive and responsible bidder.

Notes:

Sponsors:

Attachments: 25-3107 Board Letter -Guardrails and Traffic Barriers

Contact:

Drafter: Darlene.Hickman@cookcountyil.gov

Enactment Date:

Enactment Number:

Hearing Date:

Effective Date:

History of Legislative File

Version:	Acting Body:	Date:	Action:	Sent To:	Due Date:	Return Date:	Result:
1	Board of Commissioners	07/24/2025	refer	Transportation Committee			Pass
1	Transportation Committee	09/17/2025	recommend for approval				Pass
1	Board of Commissioners	09/18/2025	approve				Pass

Text of Legislative File 25-3107

EXHIBIT IX

Minority-Owned Business Enterprise and Women-Owned Business Enterprise Utilization Plan

COOK COUNTY
OFFICE OF THE
Chief Procurement
Officer

161 N. Clark
Suite 2300
Chicago, Illinois 60601

Date: July 15, 2025

TO: Raffi Sarrafian, Chief Procurement Officer
Office of the Chief Procurement Officer

FROM: JEANETTA CARDINE
Jeanetta Cardine, Deputy Director
Compliance Center of Excellence
Center of Business Enterprise Development

RE: Contract No. 2557-03184
Guardrail and Traffic Barrier Terminals Replacement and Repairs
Department of Transportation and Highways
Competitive Bid: Goods and Services
Contractor: Midwest Fence Corporation
Original Contract Value: $2,282,197.25
Original Contract Term: 9/1/2025 – 8/31/2027 with One (1) Two-year renewal option
Participation Goal: 0% MBE & 0% WBE

The Center of Business Enterprise Development is in receipt of the above-referenced contract and has determined a 0% MBE and 0% WBE participation goal was recommended and does not require the Center of Business Enterprise Development to review for MBE/WBE compliance with the Minority- and Women- owned Business Enterprises (MBE/WBE) Ordinance.

JC/mk

CC: Kevin Fair, (OCPO)
Edward Tully, (DOTH)

COOK COUNTY
OFFICE OF THE
Chief Procurement
Officer

MBE/WBE UTILIZATION PLAN - FORM 1

BIDDER/PROPOSER HEREBY STATES that all MBE/WBE firms included in this Plan are certified MBEs/WBEs by at least one of the entities listed in the General Conditions – Section 19.

I. **BIDDER/PROPOSER MBE/WBE STATUS:** (check the appropriate line)

☐ Bidder/Proposer is a certified MBE or WBE firm. (If so, attach copy of current Letter of Certification)

☐ Bidder/Proposer is a Joint Venture and one or more Joint Venture partners are certified MBEs or WBEs. (If so, attach copies of Letter(s) of Certification, a copy of Joint Venture Agreement clearly describing the role of the MBE/WBE firm(s) and its ownership interest in the Joint Venture and a completed Joint Venture Affidavit.

☒ Bidder/Proposer is not a certified MBE or WBE firm, nor a Joint Venture with MBE/WBE partners, but will utilize MBE and WBE firms either directly or indirectly in the performance of the Contract. (If so, complete Sections II below and the Letter(s) of Intent – Form 2).

II. ☐ **Direct Participation of MBE/WBE Firms** ☐ **Indirect Participation of MBE/WBE Firms**

NOTE: Where goals have not been achieved through direct participation, Bidder/Proposer shall include documentation outlining efforts to achieve Direct Participation at the time of Bid/Proposal submission. Indirect Participation will only be considered after all efforts to achieve Direct Participation have been exhausted. Only after written documentation of Good Faith Efforts is received will Indirect Participation be considered.

MBEs/WBEs that will perform as subcontractors/suppliers/consultants include the following:

MBE/WBE Firm: Not Applicable

Address: _____

E-mail: _____

Contact Person: _____ Phone: _____

Dollar Amount Participation: $_____

Percent Amount of Participation: _____%

*Letter of Intent attached? Yes ☐ No ☐
*Current Letter of Certification attached? Yes ☐ No ☐

MBE/WBE Firm: _____

Address: _____

E-mail: _____

Contact Person: _____ Phone: _____

Dollar Amount Participation: $_____

Percent Amount of Participation: _____%

*Letter of Intent attached? Yes ☐ No ☐
*Current Letter of Certification attached? Yes ☐ No ☐

Attach additional sheets as needed.

*** Letter(s) of Intent and current Letters of Certification must be submitted at the time of bid.**

COOK COUNTY
OFFICE OF THE
Chief Procurement
Officer

MBE/WBE LETTER OF INTENT - FORM 2

M/WBE Firm: _____ Not Applicable

Contact Person: _____

Address: _____

City/State: _____ Zip: _____

Phone: _____ Fax: _____

Email: _____

Participation: ☐ Direct ☐ Indirect

Certifying Agency: _____

Certification Expiration Date: _____

Ethnicity: _____

Bid/Proposal/Contract #: _____

FEIN #: _____

Will the M/WBE firm be subcontracting any of the goods or services of this contract to another firm?

☐ No ☐ Yes – Please attach explanation. Proposed Subcontractor(s): _____

The undersigned M/WBE is prepared to provide the following Commodities/Services for the above named Project/ Contract: *(If more space is needed to fully describe M/WBE Firm's proposed scope of work and/or payment schedule, attach additional sheets)*

_____

_____

_____

_____

Indicate the **Dollar Amount, Percentage**, and the **Terms of Payment** for the above-described Commodities/ Services:

_____

_____

THE UNDERSIGNED PARTIES AGREE that this Letter of Intent will become a binding Subcontract Agreement for the above work, conditioned upon (1) the Bidder/Proposer's receipt of a signed contract from the County of Cook; (2) Undersigned Subcontractor remaining compliant with all relevant credentials, codes, ordinances and statutes required by Contractor, Cook County, and the State to participate as a MBE/WBE firm for the above work. The Undersigned Parties do also certify that they did not affix their signatures to this document until all areas under Description of Service/ Supply and Fee/Cost were completed.

_____
Signature (*M/WBE*)

_____
Print Name

_____
Firm Name

_____
Date

Subscribed and sworn before me

this ____ day of_____, 20____.

Notary Public _____

SEAL

_____
Signature (*Prime Bidder/Proposer*)

_____
Print Name

_____
Firm Name

_____
Date

Subscribed and sworn before me

this ____ day of_____, 20____.

Notary Public _____

SEAL

COOK COUNTY
OFFICE OF THE
Chief Procurement
Officer

PETITION FOR PARTIAL OR FULL WAIVER – FORM 3

Bidder/Proposer: Midwest Fence Corporation

Contract No./Title: 2557-03184

A. BIDDER/PROPOSER HEREBY REQUESTS:

X FULL MBE WAIVER _____ PARTIAL MBE WAIVER

X FULL WBE WAIVER _____ PARTIAL WBE WAIVER

X FULL DBE WAIVER _____ PARTIAL DBE WAIVER

B. REASON FOR PARTIAL/FULL WAIVER REQUEST:

Bidder/Proposer shall check each item applicable to its overall reason for a waiver request. Additionally, supporting documentation shall be submitted with this request.

_____ (1) Lack of sufficient qualified MBEs and/or WBEs capable of providing the goods or services required by the contract.

_____(2) The specifications and necessary requirements for performing the contract make it impossible or economically infeasible to divide the contract to enable the contractor to utilize MBEs and/or WBEs in accordance with the applicable participation.

_____(3) Price(s) quoted by potential MBEs and/or WBEs are above competitive levels and increase cost of doing business and would make acceptance of such MBE and/or WBE bid economically impracticable, taking into consideration the percentage of total contract price represented by such MBE and/or WBE bid.

_____(4) There are other relevant factors making it impossible or economically infeasible to utilize MBE and/or WBE firms.

This is a zero goal project.

GOOD FAITH EFFORT TRANSPARENCY REPORT

C. GOOD FAITH EFFORTS TO OBTAIN PARTICIPATION (attach sheets as necessary as Schedule 1)
Bidder/Proposer shall explain and detail the following Good Faith Efforts undertook to meet Cook County's contract specific goals.

1. Please attach to this form a detailed list of any and all PCEs, stating the PCE certification (MBE and/or WBE as defined by the Cook County Municipal Code) and with whom from the contacted PCEs the Bidder/Proposer engaged, contacted, and/or communicated with in the County's Market Place;
   Timelines:

   a. When the Bidder/Proposer knew of the bid;
   b. When the Bidder/Proposer contacted the PCE(s);
   c. When the Bidder/Proposer formulated its bid and utilization plan; and
   d. When was the bid request due date.

2. The number of timely attempts to contact PCEs providing the type of supplies, equipment, goods, and/or services required for the Procurement, including but not limited to;

   a. Dates of each contact attempt for each contacted PCE;
   b. Whom, if anyone, the Bidder/Proposer communicated and/or corresponded (including written, virtual, digital, electronic, and other feasible methods of communication);
   c. The number of unsuccessful attempts to communicate or correspond with PCEs; and
   d. Attach copies of all solicitations to contacted PCEs.

3. How the Bidder/Proposer proposed to divide the procurement requirements into small tasks and/or quantities into economically feasible units to promote PCE participation.

4. Whether and to what degree the requesting party will endeavor to maximize indirect participation.

5. Detailed explanation of use, if any, of the Center of Business Enterprise Development Compliance services and staff.

6. Detailed explanation of timely notification and usage of services and assistance provided by community, minority, and/or women business organizations.

7. Attach any other documentation relative to Good Faith Efforts in complying with MBE and WBE participation.

GOOD FAITH EFFORT TRANSPARENCY REPORT

By signing below, I affirm under penalty of perjury the information provided in the Petition for Full or Partial Waiver/Good Faith Effort Transparency Report is truthful, accurate, and complete, to the best of my knowledge and capacity. I agree any finding of false, fraudulent, and/or otherwise misleading information will automatically disqualify the request for a waiver and County's Center of Business Enterprise Development reserves the right to pursue additional actions and/or remedies against the requesting Bidder/Proposer.

	Secretary	5/20/25
Signature and Title of Bidder/Proposer	Title	Date

Zero goal project.

EXHIBIT X

Certificate of Insurance

A certificate of insurance is not required to be submitted with the Bid. The apparent low Bidder shall provide a certificate of insurance that meets the required insurance and amounts of coverage, when requested by the County. Failure to provide a certificate of insurance meeting the required coverages and amounts of coverages may result in the Bidder being removed from consideration for award.

CERTIFICATE OF LIABILITY INSURANCE

DATE (MM/DD/YYYY): 05/21/2025

THIS CERTIFICATE IS ISSUED AS A MATTER OF INFORMATION ONLY AND CONFERS NO RIGHTS UPON THE CERTIFICATE HOLDER. THIS CERTIFICATE DOES NOT AFFIRMATIVELY OR NEGATIVELY AMEND, EXTEND OR ALTER THE COVERAGE AFFORDED BY THE POLICIES BELOW. THIS CERTIFICATE OF INSURANCE DOES NOT CONSTITUTE A CONTRACT BETWEEN THE ISSUING INSURER(S), AUTHORIZED REPRESENTATIVE OR PRODUCER, AND THE CERTIFICATE HOLDER.

IMPORTANT: If the certificate holder is an ADDITIONAL INSURED, the policy(ies) must have ADDITIONAL INSURED provisions or be endorsed. If SUBROGATION IS WAIVED, subject to the terms and conditions of the policy, certain policies may require an endorsement. A statement on this certificate does not confer rights to the certificate holder in lieu of such endorsement(s).

PRODUCER
DSP Insurance Services, Inc.
1900 E. Golf Road, Suite 225

Schaumburg IL 60173

CONTACT NAME: Bob Schutz
PHONE (A/C, No, Ext): (847) 485-2421 FAX (A/C, No): (847) 934-6186
E-MAIL ADDRESS: dfinlon@dspins.com

INSURER(S) AFFORDING COVERAGE	NAIC #
INSURER A: The Phoenix Insurance Company	25623 A+XV
INSURER B: Travelers Cas. Co of Connecticut	36170 A+XV
INSURER C: Travelers Prop Cas Co of America	25674 A+XV
INSURER D:	
INSURER E:	
INSURER F:	

INSURED
Midwest Fence Corp

900 N Kedzie

Chicago IL 60651
(773) 722-6616

COVERAGES DF **CERTIFICATE NUMBER:** Cert ID 43524 (547) **REVISION NUMBER:**

THIS IS TO CERTIFY THAT THE POLICIES OF INSURANCE LISTED BELOW HAVE BEEN ISSUED TO THE INSURED NAMED ABOVE FOR THE POLICY PERIOD INDICATED. NOTWITHSTANDING ANY REQUIREMENT, TERM OR CONDITION OF ANY CONTRACT OR OTHER DOCUMENT WITH RESPECT TO WHICH THIS CERTIFICATE MAY BE ISSUED OR MAY PERTAIN, THE INSURANCE AFFORDED BY THE POLICIES DESCRIBED HEREIN IS SUBJECT TO ALL THE TERMS, EXCLUSIONS AND CONDITIONS OF SUCH POLICIES. LIMITS SHOWN MAY HAVE BEEN REDUCED BY PAID CLAIMS.

INSR LTR	TYPE OF INSURANCE	ADDL INSD	SUBR WVD	POLICY NUMBER	POLICY EFF (MM/DD/YYYY)	POLICY EXP (MM/DD/YYYY)	LIMITS	
A	X COMMERCIAL GENERAL LIABILITY CLAIMS-MADE X OCCUR GEN'L AGGREGATE LIMIT APPLIES PER: POLICY X PRO-JECT LOC OTHER:			DTCO6K518583-PHX-25	04/01/2025	04/01/2026	EACH OCCURRENCE DAMAGE TO RENTED PREMISES (Ea occurrence) MED EXP (Any one person) PERSONAL & ADV INJURY GENERAL AGGREGATE PRODUCTS - COMP/OP AGG	$ 2,000,000 $ 300,000 $ 10,000 $ 2,000,000 $ 4,000,000 $ 4,000,000 $
A	AUTOMOBILE LIABILITY X ANY AUTO OWNED AUTOS ONLY X HIRED AUTOS ONLY SCHEDULED AUTOS X NON-OWNED AUTOS ONLY			8106K487830-25-26-G	04/01/2025	04/01/2026	COMBINED SINGLE LIMIT (Ea accident) BODILY INJURY (Per person) BODILY INJURY (Per accident) PROPERTY DAMAGE (Per accident)	$ 1,000,000 $ $ $ $
C	X UMBRELLA LIAB X OCCUR EXCESS LIAB CLAIMS-MADE DED X RETENTION $ 10,000			CUP1T319044-25-NF	04/01/2025	04/01/2026	EACH OCCURRENCE AGGREGATE	$ 5,000,000 $ 5,000,000 $
B	WORKERS COMPENSATION AND EMPLOYERS' LIABILITY ANYPROPRIETOR/PARTNER/EXECUTIVE OFFICER/MEMBER EXCLUDED? Y/N N (Mandatory in NH) If yes, describe under DESCRIPTION OF OPERATIONS below	N/A		UB6K517537-25-26-G	04/01/2025	04/01/2026	X PER STATUTE OTH-ER E.L. EACH ACCIDENT E.L. DISEASE - EA EMPLOYEE E.L. DISEASE - POLICY LIMIT	 $ 1,000,000 $ 1,000,000 $ 1,000,000
C	Leased & Rented Equipment			QT6307P344190	04/01/2025	04/01/2026	Maximum limit per item	$ 100,000 $

DESCRIPTION OF OPERATIONS / LOCATIONS / VEHICLES (ACORD 101, Additional Remarks Schedule, may be attached if more space is required)
RE: CONTRACT #2557-03184, GUARDRAILS MAINTENANCE SERVICE. ADDITIONAL INSUREDS ON GENERAL LIABILITY, AUTO LIABILITY AND UMBRELLA ON A PRIMARY & NON-CONTRIBUTORY BASIS WHEN REQUIRED BY WRITTEN CONTRACT: COOK COUNTY, IT'S OFFICIALS AND EMPLOYEES. WAIVER OF SUBROGATION APPLIES IN FAVOR OF THE ADDITIONAL INSUREDS ON ALL POLICIES WHEN REQUIRED BY WRITTEN CONTRACT.

CERTIFICATE HOLDER

COOK COUNTY
OFFICE OF THE CHIEF PROCUREMENT OFFICER
118 N CLARK, ROOM 1018

CHICAGO IL 60602

CANCELLATION

SHOULD ANY OF THE ABOVE DESCRIBED POLICIES BE CANCELLED BEFORE THE EXPIRATION DATE THEREOF, NOTICE WILL BE DELIVERED IN ACCORDANCE WITH THE POLICY PROVISIONS.

AUTHORIZED REPRESENTATIVE

© 1988-2015 ACORD CORPORATION. All rights reserved.

The ACORD name and logo are registered marks of ACORD

EXHIBIT XI

Addenda Acknowledgment Form (If Applicable)

COOK COUNTY
OFFICE OF THE CHIEF PROCUREMENT OFFICER
69 West Washington, Suite 3000
Chicago, Illinois 60602
(312) 603-5370

ADDENDA ACKNOWLEDGEMENT FORM

IMPORTANT NOTICE: Bidders shall acknowledge receipt of any addenda issued on the spaces provided below and submit this form with its Bid. Failure to acknowledge receipt of any addenda issued and submittal of this form may render the Bid non-responsive.

Bid No.: 2557-03184

Project Name: Guardrail and Traffic Barrier Terminals Replacement and Repairs

- ☐ Addendum No. 1
- ☐ Addendum No. 2
- ☐ Addendum No. 3
- ☐ Addendum No. 4
- ☐ Addendum No. 5
- ☐ Other: _____
- ☒ N/A (No Addenda Issued)

Signature: Everett J. Bell Date: 5/21/2025

Name: Everett J. Bell Title: Secretary

Company: Midwest Fence Corporation

Address: 900 N. Kedzie Ave, Chicago, IL 60651

EXHIBIT XII

Bid Page

Bidders shall enter their bid pricing directly into Bonfire. See Exhibit I for instructions.

Guardrail and Traffic Barrier Terminals Replacement and Repair

ITEM	DESCRIPTION	UNIT	Quantity	Unit Price	TOTAL
1	TRAFFIC BARRIER TERMINAL TYPE 1 SPECIAL -TANGENT	EACH	100	$6,900.00	$690,000.00
2	TRAFFIC BARRIER TERMINAL TYPE 1 SPECIAL - FLARED	EACH	5	$6,200.00	$31,000.00
3	REPAIR TRAFFIC BARRIER TERMINAL TYPE 1 SPECIAL	EACH	20	$5,500.00	$110,000.00
4	TRAFFIC BARRIER TERMINAL TYPE 1	EACH	10	$5,400.00	$54,000.00
5	TRAFFIC BARRIER TERMINAL TYPE 1 NOSE ASSEMBLY	EACH	10	$1,200.00	$12,000.00
6	TRAFFIC BARRIER TERMINAL TYPE 2	EACH	20	$3,000.00	$60,000.00
7	TRAFFIC BARRIER TERMINAL TYPE 5	EACH	2	$2,800.00	$5,600.00
8	TRAFFIC BARRIER TERMINAL TYPE 6	EACH	2	$7,000.00	$14,000.00
9	TRAFFIC BARRIER TERMINAL TYPE 6A	EACH	2	$8,500.00	$17,000.00
10	THRIE-BEAM GUARDRAIL ELEMENT PLATE	EACH	6	$650.00	$3,900.00
11	THRIE-BEAM GUARDRAIL RADIUS ELEMENT PLATE	EACH	2	$1,300.00	$2,600.00
12	THRIE-BEAM MODIFIED BLOCK	EACH	10	$110.00	$1,100.00
13	THRIE-BEAM POST	EACH	10	$330.00	$3,300.00
14	RAIL ELEMENT PLATES	EACH	150	$450.00	$67,500.00
15	RAIL ELEMENT PLATES (RADIUS)	EACH	50	$700.00	$35,000.00
16	GUARDRAIL BLOCKS	EACH	200	$75.00	$15,000.00
17	STEEL POSTS	EACH	150	$390.00	$58,500.00
18	STEEL POSTS MODIFIED	EACH	20	$1,000.00	$20,000.00
19	STEEL POSTS SPECIAL	EACH	100	$700.00	$70,000.00
20	WOOD POST	EACH	5	$500.00	$2,500.00
21	REMOVE AND RESET POSTS	EACH	200	$200.00	$40,000.00
22	SINGLE END SECTION	EACH	5	$300.00	$1,500.00
23	CONNECTING END SECTION	EACH	5	$800.00	$4,000.00
24	MISSING OR FAILED ANCHOR CABLES	EACH	5	$700.00	$3,500.00
25	MISSING OR FAILED LAG BOLTS	EACH	5	$112.00	$560.00
26	CURB REMOVAL (PARTIAL)	FOOT	500	$165.00	$82,500.00
27	BACK SIDE PROTECTION OF GUARDRAIL	FOOT	100	$65.00	$6,500.00
28	HOT-MIX ASPHALT SHOULDER 8"	SQ YD	100	$1,500.00	$150,000.00
29	CRASH ATTENUATOR- QUADGUARD THREE BAY SYSTEM FOR WIDE HAZARDS	EACH	5	$50,000.00	$250,000.00
30	CRASH ATTENUATOR- NOSE ASSEMBLY	EACH	5	$8,000.00	$40,000.00
31	EMERGENCY RESPONSE	EACH	5	$4,000.00	$20,000.00
32	STEEL PLATE BEAM GUARDRAIL, TYPE A, 6 FOOT POSTS	FOOT	490	$75.00	$36,750.00
33	STEEL PLATE BEAM GUARDRAIL, TYPE A, 9 FOOT POSTS	FOOT	490	$82.00	$40,180.00
34	LONG-SPAN GUARDRAIL OVER CULVERT, 18 FT 9 IN SPAN	FOOT	80	$65.00	$5,200.00
35	FURNISHED EXCAVATION	CU YD	134	$675.00	$90,450.00
36	TOPSOIL FURNISH & PLACE, 4"	SQ YD	855	$135.00	$115,425.00
37	NITROGEN FERTILIZER NUTRIENT	POUND	16	$22.00	$352.00
38	PHOSPHORUS FERTILIZER NUTRIENT	POUND	16	$22.00	$352.00
39	POTASSIUM FERTILIZER NUTRIENT	POUND	16	$22.00	$352.00
40	SEEDING, CLASS 2A	ACRE	0.2	$11,000.00	$2,200.00
41	EROSION CONTROL BLANKET	SQ YD	855	$17.25	$14,748.75
42	PERIMETER EROSION BARRIER	FOOT	1130	$15.75	$17,797.50
43	REMOVAL AND DISPOSAL OF UNSUITABLE MATERIAL	CU YD	101	$330.00	$33,330.00
44	TERMINAL MARKER - DIRECT APPLIED	EACH	50	$50.00	$2,500.00
45	TRIANGULAR HI-INTENSITY GUARDRAIL DELINEATOR	EACH	200	$15.00	$3,000.00
46	EXPLORATION TRENCH (SPECIAL)	FOOT	100	$480.00	$48,000.00
	TOTAL:				$2,282,197.25

EXHIBIT XIII

Economic Disclosure Statement Forms, *including Contract and EDS Signature Pages*

COOK COUNTY
ECONOMIC DISCLOSURE STATEMENT
AND EXECUTION DOCUMENT
INDEX

Section	Description	Pages
1	Instructions for Completion of EDS	EDS i - ii
2	Certifications	EDS 1– 2
3	Economic and Other Disclosures, Affidavit of Child Support Obligations, Disclosure of Ownership Interest and Familial Relationship Disclosure Form	EDS 3 – 12
4	Cook County Affidavit for Wage Theft Ordinance	EDS 13-14
5	Contract and EDS Execution Page	EDS 15
6	Cook County Signature Page	EDS 16

SECTION 1
INSTRUCTIONS FOR COMPLETION OF ECONOMIC DISCLOSURE STATEMENT AND EXECUTION DOCUMENT

This Economic Disclosure Statement and Execution Document ("EDS") is to be completed and executed by every Bidder on a County contract, every Proposer responding to a Request for Proposals, and every Respondent responding to a Request for Qualifications, and others as required by the Chief Procurement Officer. The execution of the EDS shall serve as the execution of a contract awarded by the County. The Chief Procurement Officer reserves the right to request that the Bidder or Proposer, or Respondent provide an updated EDS on an annual basis.

Definitions. Terms used in this EDS and not otherwise defined herein shall have the meanings given to such terms in the Instructions to Bidders, General Conditions, Request for Proposals, Request for Qualifications, as applicable.

Affiliate means a person that directly or indirectly through one or more intermediaries, Controls is Controlled by, or is under common Control with the Person specified.

Applicant means a person who executes this EDS.

Bidder means any person who submits a Bid.

Code means the Code of Ordinances, Cook County, Illinois available on municode.com.

Contract shall include any written document to make Procurements by or on behalf of Cook County.

Contractor or *Contracting Party* means a person that enters into a Contract with the County.

Control means the unfettered authority to directly or indirectly manage governance, administration, work, and all other aspects of a business.

EDS means this complete Economic Disclosure Statement and Execution Document, including all sections listed in the Index and any attachments.

Joint Venture means an association of two or more Persons proposing to perform a for-profit business enterprise. Joint Ventures must have an agreement in writing specifying the terms and conditions of the relationship between the partners and their relationship and respective responsibility for the Contract

Lobby or lobbying means to, for compensation, attempt to influence a County official or County employee with respect to any County matter.

Lobbyist means any person who lobbies.

Person or *Persons* means any individual, corporation, partnership, Joint Venture, trust, association, Limited Liability Company, sole proprietorship or other legal entity.

Prohibited Acts means any of the actions or occurrences which form the basis for disqualification under the Code, or under the Certifications hereinafter set forth.

Proposal means a response to an RFP.

Proposer means a person submitting a Proposal.

Response means response to an RFQ.

Respondent means a person responding to an RFQ.

RFP means a Request for Proposals issued pursuant to this Procurement Code.

RFQ means a Request for Qualifications issued to obtain the qualifications of interested parties.

INSTRUCTIONS FOR COMPLETION OF ECONOMIC DISCLOSURE STATEMENT AND EXECUTION DOCUMENT

Section 1: Instructions. Section 1 sets forth the instructions for completing and executing this EDS.

Section 2: Certifications. Section 2 sets forth certifications that are required for contracting parties under the Code and other applicable laws. Execution of this EDS constitutes a warranty that all the statements and certifications contained, and all the facts stated, in the Certifications are true, correct and complete as of the date of execution.

Section 3: Economic and Other Disclosures Statement. Section 3 is the County's required Economic and Other Disclosures Statement form. Execution of this EDS constitutes a warranty that all the information provided in the EDS is true, correct and complete as of the date of execution, and binds the Applicant to the warranties, representations, agreements and acknowledgements contained therein.

Required Updates. The Applicant is required to keep all information provided in this EDS current and accurate. In the event of any change in the information provided, including but not limited to any change which would render inaccurate or incomplete any certification or statement made in this EDS, the Applicant shall supplement this EDS up to the time the County takes action, by filing an amended EDS or such other documentation as is required.

Additional Information. The County's Governmental Ethics and Campaign Financing Ordinances impose certain duties and obligations on persons or entities seeking County contracts, work, business, or transactions, and the Applicant is expected to comply fully with these ordinances. For further information please contact the Director of Ethics at (312) 603-4304 (69 W. Washington St. Suite 3040, Chicago, IL 60602) or visit the web-site at cookcountyil.gov/ethics-board-of.

Authorized Signers of Contract and EDS Execution Page. If the Applicant is a corporation, the President and Secretary must execute the EDS. In the event that this EDS is executed by someone other than the President, attach hereto a certified copy of that section of the Corporate By-Laws or other authorization by the Corporation, satisfactory to the County that permits the person to execute EDS for said corporation. If the corporation is not registered in the State of Illinois, a copy of the Certificate of Good Standing from the state of incorporation must be submitted with this Signature Page.

If the Applicant is a partnership or joint venture, all partners or joint venturers must execute the EDS, unless one partner or joint venture has been authorized to sign for the partnership or joint venture, in which case, the partnership agreement, resolution or evidence of such authority satisfactory to the Office of the Chief Procurement Officer must be submitted with this Signature Page.

If the Applicant is a member-managed LLC all members must execute the EDS, unless otherwise provided in the operating agreement, resolution or other corporate documents. If the Applicant is a manager-managed LLC, the manager(s) must execute the EDS. The Applicant must attach either a certified copy of the operating agreement, resolution or other authorization, satisfactory to the County, demonstrating such person has the authority to execute the EDS on behalf of the LLC. If the LLC is not registered in the State of Illinois, a copy of a current Certificate of Good Standing from the state of incorporation must be submitted with this Signature Page.

If the Applicant is a Sole Proprietorship, the sole proprietor must execute the EDS.

A "Partnership" "Joint Venture" or "Sole Proprietorship" operating under an Assumed Name must be registered with the Illinois county in which it is located, as provided in 805 ILCS 405 (2012), and documentation evidencing registration must be submitted with the EDS.

Effective October 1, 2016 all foreign corporations and LLCs must be registered with the Illinois Secretary of State's Office unless a statutory exemption applies to the applicant. Applicants who are exempt from registering must provide a written statement explaining why they are exempt from registering as a foreign entity with the Illinois Secretary of State's Office.

SECTION 2

CERTIFICATIONS

THE FOLLOWING CERTIFICATIONS ARE MADE PURSUANT TO STATE LAW AND THE CODE. THE APPLICANT IS CAUTIONED TO CAREFULLY READ THESE CERTIFICATIONS PRIOR TO SIGNING THE SIGNATURE PAGE. SIGNING THE SIGNATURE PAGE SHALL CONSTITUTE A WARRANTY BY THE APPLICANT THAT ALL THE STATEMENTS, CERTIFICATIONS AND INFORMATION SET FORTH WITHIN THESE CERTIFICATIONS ARE TRUE, COMPLETE AND CORRECT AS OF THE DATE THE SIGNATURE PAGE IS SIGNED. THE APPLICANT IS NOTIFIED THAT IF THE COUNTY LEARNS THAT ANY OF THE FOLLOWING CERTIFICATIONS WERE FALSELY MADE, THAT ANY CONTRACT ENTERED INTO WITH THE APPLICANT SHALL BE SUBJECT TO TERMINATION.

A. PERSONS AND ENTITIES SUBJECT TO DISQUALIFICATION

No person or business entity shall be awarded a contract or sub-contract, for a period of five (5) years from the date of conviction or entry of a plea or admission of guilt, civil or criminal, if that person or business entity:

1) Has been convicted of an act committed, within the State of Illinois, of bribery or attempting to bribe an officer or employee of a unit of state, federal or local government or school district in the State of Illinois in that officer's or employee's official capacity;

2) Has been convicted by federal, state or local government of an act of bid-rigging or attempting to rig bids as defined in the Sherman Anti-Trust Act and Clayton Act. Act. 15 U.S.C. Section 1 *et seq.;*

3) Has been convicted of bid-rigging or attempting to rig bids under the laws of federal, state or local government;

4) Has been convicted of an act committed, within the State, of price-fixing or attempting to fix prices as defined by the Sherman Anti-Trust Act and the Clayton Act. 15 U.S.C. Section 1, *et seq.;*

5) Has been convicted of price-fixing or attempting to fix prices under the laws the State;

6) Has been convicted of defrauding or attempting to defraud any unit of state or local government or school district within the State of Illinois;

7) Has made an admission of guilt of such conduct as set forth in subsections (1) through (6) above which admission is a matter of record, whether or not such person or business entity was subject to prosecution for the offense or offenses admitted to; or

8) Has entered a plea of *nolo contendere* to charge of bribery, price-fixing, bid-rigging, or fraud, as set forth in sub-paragraphs (1) through (6) above.

In the case of bribery or attempting to bribe, a business entity may not be awarded a contract if an official, agent or employee of such business entity committed the Prohibited Act on behalf of the business entity and pursuant to the direction or authorization of an officer, director or other responsible official of the business entity, and such Prohibited Act occurred within three years prior to the award of the contract. In addition, a business entity shall be disqualified if an owner, partner or shareholder controlling, directly or indirectly, 20% or more of the business entity, or an officer of the business entity has performed any Prohibited Act within five years prior to the award of the Contract.

THE APPLICANT HEREBY CERTIFIES THAT: The Applicant has read the provisions of Section A, Persons and Entities Subject to Disqualification, that the Applicant has not committed any Prohibited Act set forth in Section A, and that award of the Contract to the Applicant would not violate the provisions of such Section or of the Code.

B. BID-RIGGING OR BID ROTATING

THE APPLICANT HEREBY CERTIFIES THAT: *In accordance with 720 ILCS 5/33 E-11, neither the Applicant nor any Affiliated Entity is barred from award of this Contract as a result of a conviction for the violation of State laws prohibiting bid-rigging or bid rotating.*

C. DRUG FREE WORKPLACE ACT

THE APPLICANT HEREBY CERTIFIES THAT: The Applicant will provide a drug free workplace, as required by (30 ILCS 580/3).

D. **DELINQUENCY IN PAYMENT OF TAXES**

***THE APPLICANT HEREBY CERTIFIES THAT**: The Applicant is not an owner or a party responsible for the payment of any tax or fee administered by Cook County, such as bar award of a contract or subcontract pursuant to the Code, Chapter 34, Section 34-171.*

E. **HUMAN RIGHTS ORDINANCE**

No person who is a party to a contract with Cook County ("County") shall engage in unlawful discrimination or sexual harassment against any individual in the terms or conditions of employment, credit, public accommodations, housing, or provision of County facilities, services or programs (Code Chapter 42, Section 42-30 *et seq.*).

F. **ILLINOIS HUMAN RIGHTS ACT**

***THE APPLICANT HEREBY CERTIFIES THAT:** It is in compliance with the Illinois Human Rights Act (775 ILCS 5/2-105), and agrees to abide by the requirements of the Act as part of its contractual obligations.*

G. **INSPECTOR GENERAL (COOK COUNTY CODE, CHAPTER 34, SECTION 34-174 and Section 34-250)**

The Applicant has not willfully failed to cooperate in an investigation by the Cook County Independent Inspector General or to report to the Independent Inspector General any and all information concerning conduct which they know to involve corruption, or other criminal activity, by another county employee or official, which concerns his or her office of employment or County related transaction.

The Applicant has reported directly and without any undue delay any suspected or known fraudulent activity in the County's Procurement process to the Office of the Cook County Inspector General.

H. **CAMPAIGN CONTRIBUTIONS (COOK COUNTY CODE, CHAPTER 2, SECTION 2-585)**

THE APPLICANT CERTIFIES THAT: It has read and shall comply with the Cook County's Ordinance concerning campaign contributions, which is codified at Chapter 2, Division 2, Subdivision II, Section 585, and can be read in its entirety at www.municode.com.

I. **GIFT BAN, (COOK COUNTY CODE, CHAPTER 2, SECTION 2-574)**

THE APPLICANT CERTIFIES THAT: It has read and shall comply with the Cook County's Ordinance concerning receiving and soliciting gifts and favors, which is codified at Chapter 2, Division 2, Subdivision II, Section 574, and can be read in its entirety at www.municode.com.

J. **LIVING WAGE ORDINANCE PREFERENCE (COOK COUNTY CODE, CHAPTER 34, SECTION 34-160;**

Unless expressly waived by the Cook County Board of Commissioners, the Code requires that a living wage must be paid to individuals employed by a Contractor which has a County Contract and by all subcontractors of such Contractor under a County Contract, throughout the duration of such County Contract. The amount of such living wage is annually by the Chief Financial Officer of the County, and shall be posted on the Chief Procurement Officer's website.

The term "Contract" as used in Section 4, I, of this EDS, specifically excludes contracts with the following:

1) Not-For Profit Organizations (defined as a corporation having tax exempt status under Section 501(C)(3) of the United State Internal Revenue Code and recognized under the Illinois State not-for -profit law);

2) Community Development Block Grants;

3) Cook County Works Department;

4) Sheriff's Work Alternative Program; and

5) Department of Correction inmates.

CONTRACT #: 2557-03184

SECTION 3

REQUIRED DISCLOSURES

1. DISCLOSURE OF LOBBYIST CONTACTS

List all persons that have made lobbying contacts on your behalf with respect to this contract:

Name	Address
None	

2. LOCAL BUSINESS PREFERENCE STATEMENT (CODE, CHAPTER 34, SECTION 34-230)

Local business means a Person, including a foreign corporation authorized to transact business in Illinois, having a bona fide establishment located within the County at which it is transacting business on the date when a Bid is submitted to the County, and which employs the majority of its regular, full-time work force within the County. A Joint Venture shall constitute a Local Business if one or more Persons that qualify as a "Local Business" hold interests totaling over 50 percent in the Joint Venture, even if the Joint Venture does not, at the time of the Bid submittal, have such a bona fide establishment within the County.

a) Is Applicant a "Local Business" as defined above?

Yes: ☑ No: ☐

b) If yes, list business addresses within Cook County:

900 N. Kedzie Ave, Chicago, IL 60651

c) Does Applicant employ the majority of its regular full-time workforce within Cook County?

Yes: ☑ No: ☐

3. THE CHILD SUPPORT ENFORCEMENT ORDINANCE (CODE, CHAPTER 34, SECTION 34-172)

Every Applicant for a County Privilege shall be in full compliance with any child support order before such Applicant is entitled to receive or renew a County Privilege. When delinquent child support exists, the County shall not issue or renew any County Privilege, and may revoke any County Privilege.

All Applicants are required to review the Cook County Affidavit of Child Support Obligations attached to this EDS (EDS-5) and complete the Affidavit, based on the instructions in the Affidavit.

4. REAL ESTATE OWNERSHIP DISCLOSURES.

The Applicant must indicate by checking the appropriate provision below and providing all required information that either:

a) The following is a complete list of all real estate owned by the Applicant in Cook County:

PERMANENT INDEX NUMBER(S): See Attached Next Page

(ATTACH SHEET IF NECESSARY TO LIST ADDITIONAL INDEX NUMBERS)

OR:

b) ☐ The Applicant owns no real estate in Cook County.

5. EXCEPTIONS TO CERTIFICATIONS OR DISCLOSURES.

If the Applicant is unable to certify to any of the Certifications or any other statements contained in this EDS and not explained elsewhere in this EDS, the Applicant must explain below:

If the letters, "NA", the word "None" or "No Response" appears above, or if the space is left blank, it will be conclusively presumed that the Applicant certified to all Certifications and other statements contained in this EDS.

LOCATION	LOCATION	PIN
815 N. Kedzie	815 N. Kedzie	16-01-319-013
		16-01-319-014
3150-54 Chicago	3150-54 Chicago	16-01-319-016
3319-3325 Chicago	3319-3325 Chicago	16-11-205-001
		16-11-205-002
		16-11-205-003
		16-11-205-004
900 N. Kedzie	900 N. Kedzie	16-02-431-003
		16-02-431-004
		16-02-431-005
		16-02-431-006
		16-02-431-007
		16-02-431-008
		16-02-431-009
		16-02-431-011
		16-02-431-012
		16-02-431-013
		16-02-431-014
		16-02-431-015
		16-02-431-016
		16-02-431-016
3340 W. Walton	3340 W. Walton	16-02-423-009
		16-02-423-010
		16-02-423-011
		16-02-423-012
		16-02-423-013
		16-02-423-014
		16-02-423-015
		16-02-423-016
		16-02-423-017
		16-02-423-018
		16-02-427-001
		16-02-427-038
		16-02-427-039
		16-02-428-010
		16-02-428-011
		16-02-428-012
3229-3249 Grand Ave	3229-3249 Grand Ave	16-02-429-001
		16-02-429-013
		16-02-429-015

EDS 4

COOK COUNTY DISCLOSURE OF OWNERSHIP INTEREST STATEMENT

The Cook County Code of Ordinances (§2-610 *et seq.*) requires that any Applicant for any County Action must disclose information concerning ownership interests in the Applicant. This Disclosure of Ownership Interest Statement must be completed with all information current as of the date this Statement is signed. Furthermore, this Statement must be kept current, by filing an amended Statement, until such time as the County Board or County Agency shall take action on the application. The information contained in this Statement will be maintained in a database and made available for public viewing. **County reserves the right to request additional information to verify veracity of information contained in this statement.**

If you are asked to list names, but there are no applicable names to list, you must state NONE. An incomplete Statement will be returned and any action regarding this contract will be delayed. A failure to fully comply with the ordinance may result in the action taken by the County Board or County Agency being voided.

"*Applicant*" means any Entity or person making an application to the County for any County Action.

"County Action" means any action by a County Agency, a County Department, or the County Board regarding an ordinance or ordinance amendment, a County Board approval, or other County agency approval, with respect to contracts, leases, or sale or purchase of real estate.

"Person" "Entity" or *"Legal Entity"* means a sole proprietorship, corporation, partnership, association, business trust, estate, two or more persons having a joint or common interest, trustee of a land trust, other commercial or legal entity or any beneficiary or beneficiaries thereof.

This Disclosure of Ownership Interest Statement must be submitted by :

1. An Applicant for County Action and

2. A Person that holds stock or a beneficial interest in the Applicant and is listed on the Applicant's Statement (a "Holder") must file a Statement and complete #1 only under **Ownership Interest Declaration**.

Please print or type responses clearly and legibly. Add additional pages if needed, being careful to identify each portion of the form to which each additional page refers.

This Statement is being made by the [✔] Applicant or [ ] Stock/Beneficial Interest Holder

This Statement is an: [✔] Original Statement or [ ] Amended Statement

Identifying Information:

Name Midwest Fence Corporation

D/B/A: Midwest Fence Corporation FEIN # Only: 36-2149466

Street Address: 900 N. Kedzie Ave

City: Chicago State: IL Zip Code: 60651

Phone No.: 773-722-6616 Fax Number: 773-722-6626 Email: ebell@mwfence.com

Cook County Business Registration Number: 031961
(Sole Proprietor, Joint Venture Partnership)

Corporate File Number (if applicable): F4975-844-8

Form of Legal Entity:

[ ] Sole Proprietor [ ] Partnership [✔] Corporation [ ] Trustee of Land Trust

[ ] Business Trust [ ] Estate [ ] Association [ ] Joint Venture

[ ] Other (describe) _____

Ownership Interest Declaration:

1. List the name(s), address, and percent ownership of each Person having a legal or beneficial interest (including ownership) of more than five percent (5%) in the Applicant/Holder.

Name	Address	Percentage Interest in Applicant/Holder
Timothy M. Bell	900 N. Kedzie Ave, Chicago, IL 60651	25
Mark F. Bell	900 N. Kedzie Ave, Chicago, IL 60651	25
Everett J. Bell	900 N. Kedzie Ave, Chicago, IL 60651	25
John C. Bell	900 N. Kedzie Ave, Chicago, IL 60651	25

2. If the interest of any Person listed in (1) above is held as an agent or agents, or a nominee or nominees, list the name and address of the principal on whose behalf the interest is held.

Name of Agent/Nominee	Name of Principal	Principal's Address

3. Is the Applicant constructively controlled by another person or Legal Entity? [☐] Yes [☑] No

If yes, state the name, address and percentage of beneficial interest of such person, and the relationship under which such control is being or may be exercised.

Name	Address	Percentage of Beneficial Interest	Relationship

Corporate Officers, Members and Partners Information:

For all corporations, list the names, addresses, and terms for all corporate officers. For all limited liability companies, list the names, addresses for all members. For all partnerships and joint ventures, list the names, addresses, for each partner or joint venture.

Name	Address	Title (specify title of Office, or whether manager or partner/joint venture)	Term of Office
Timothy M. Bell	900 N. Kedzie Ave, Chicago, IL 60651	President	Permanent
Mark F. Bell	900 N. Kedzie Ave, Chicago, IL 60651	Vice President	Permanent
Everett J. Bell	900 N. Kedzie Ave, Chicago, IL 60651	Secretary / Treasurer	Permanent
John C. Bell	900 N. Kedzie Ave, Chicago, IL 60651	Vice President	Permanent

Declaration (check the applicable box):

☐ I state under oath that the Applicant has withheld no disclosure as to ownership interest in the Applicant nor reserved any information, data or plan as to the intended use or purpose for which the Applicant seeks County Board or other County Agency action.

☑ I state under oath that the Holder has withheld no disclosure as to ownership interest nor reserved any information required to be disclosed.

COOK COUNTY DISCLOSURE OF OWNERSHIP INTEREST STATEMENT SIGNATURE PAGE

Timothy M. Bell
Name of Authorized Applicant/Holder Representative (please print or type)

President
Title

Signature

5/19/25
Date

tmbell@mwfence.com
E-mail address

773-722-6616
Phone Number

Subscribed to and sworn before me
this 19 day of May, 2025.

My commission expires:

OFFICIAL SEAL
TONIE RHUDE
NOTARY PUBLIC, STATE OF ILLINOIS
Commission No. 0520510
My Commission Expires November 14th, 2028

x Tonie Rhude
Notary Public Signature

Notary Seal

COOK COUNTY BOARD OF ETHICS
69 W. WASHINGTON STREET, SUITE 3040
CHICAGO, ILLINOIS 60602
312/603-4304 Office 312/603-9988 Fax

FAMILIAL RELATIONSHIP DISCLOSURE PROVISION

Nepotism Disclosure Requirement:

Doing a significant amount of business with the County requires that you disclose to the Board of Ethics the existence of any familial relationships with any County employee or any person holding elective office in the State of Illinois, the County, or in any municipality within the County. The Ethics Ordinance defines a significant amount of business for the purpose of this disclosure requirement as more than $25,000 in aggregate County leases, contracts, purchases or sales in any calendar year.

If you are unsure of whether the business you do with the County or a County agency will cross this threshold, err on the side of caution by completing the attached familial disclosure form because, among other potential penalties, any person found guilty of failing to make a required disclosure or knowingly filing a false, misleading, or incomplete disclosure will be prohibited from doing any business with the County for a period of three years. The required disclosure should be filed with the Board of Ethics by January 1 of each calendar year in which you are doing business with the County and again with each bid/proposal/quotation to do business with Cook County. The Board of Ethics may assess a late filing fee of $100 per day after an initial 30-day grace period.

The person that is doing business with the County must disclose his or her familial relationships. If the person on the County lease or contract or purchasing from or selling to the County is a business entity, then the business entity must disclose the familial relationships of the individuals who are and, during the year prior to doing business with the County, were:

- its board of directors,
- its officers,
- its employees or independent contractors responsible for the general administration of the entity,
- its agents authorized to execute documents on behalf of the entity, and
- its employees who directly engage or engaged in doing work with the County on behalf of the entity.

Do not hesitate to contact the Board of Ethics at (312) 603-4304 for assistance in determining the scope of any required familial relationship disclosure.

Additional Definitions:

"*Familial relationship*" means a person who is a spouse, domestic partner or civil union partner of a County employee or State, County or municipal official, or any person who is related to such an employee or official, whether by blood, marriage or adoption, as a:

- ☐ Parent
- ☐ Child
- ☐ Brother
- ☐ Sister
- ☐ Aunt
- ☐ Uncle
- ☐ Niece
- ☐ Nephew
- ☐ Grandparent
- ☐ Grandchild
- ☐ Father-in-law
- ☐ Mother-in-law
- ☐ Son-in-law
- ☐ Daughter-in-law
- ☐ Brother-in-law
- ☐ Sister-in-law
- ☐ Stepfather
- ☐ Stepmother
- ☐ Stepson
- ☐ Stepdaughter
- ☐ Stepbrother
- ☐ Stepsister
- ☐ Half-brother
- ☐ Half-sister

COOK COUNTY BOARD OF ETHICS
FAMILIAL RELATIONSHIP DISCLOSURE FORM

A. PERSON DOING OR SEEKING TO DO BUSINESS WITH THE COUNTY

Name of Person Doing Business with the County: MIDWEST FENCE CORPORATION

Address of Person Doing Business with the County: 900 N. KEDZIE AVENUE, CHICAGO, IL 60651

Phone number of Person Doing Business with the County: 773-722-6616

Email address of Person Doing Business with the County: MARK@MWFENCE.COM // TOM.A@MWFENCE.COM

If Person Doing Business with the County is a Business Entity, provide the name, title and contact information for the individual completing this disclosure on behalf of the Person Doing Business with the County:
EVERETT J. BELL - SECRETARY // 773-584-6455

B. DESCRIPTION OF BUSINESS WITH THE COUNTY

Append additional pages as needed and for each County lease, contract, purchase or sale sought and/or obtained during the calendar year of this disclosure (or the proceeding calendar year if disclosure is made on January 1), identify:

The lease number, contract number, purchase order number, request for proposal number and/or request for qualification number associated with the business you are doing or seeking to do with the County: 2557-03184

The aggregate dollar value of the business you are doing or seeking to do with the County: $ 2,282,197.25

The name, title and contact information for the County official(s) or employee(s) involved in negotiating the business you are doing or seeking to do with the County:

YaZeed Knaan - Lead Contract Negotiator- yazeed.knaan@cookcountyil.gov

The name, title and contact information for the County official(s) or employee(s) involved in managing the business you are doing or seeking to do with the County:

Dilip Patel - Manager - DOTH - dilip.patel@cookcountyil.gov

C. DISCLOSURE OF FAMILIAL RELATIONSHIPS WITH COUNTY EMPLOYEES OR STATE, COUNTY OR MUNICIPAL ELECTED OFFICIALS

Check the box that applies and provide related information where needed

☐ The Person Doing Business with the County **is an individual** and there is **no familial relationship** between this individual and any Cook County employee or any person holding elective office in the State of Illinois, Cook County, or any municipality within Cook County.

☒ The Person Doing Business with the County **is a business entity** and there is **no familial relationship** between any member of this business entity's board of directors, officers, persons responsible for general administration of the business entity, agents authorized to execute documents on behalf of the business entity or employees directly engaged in contractual work with the County on behalf of the business entity, and any Cook County employee or any person holding elective office in the State of Illinois, Cook County, or any municipality within Cook County.

COOK COUNTY BOARD OF ETHICS
FAMILIAL RELATIONSHIP DISCLOSURE FORM

☐ The Person Doing Business with the County **is an individual** and **there is a familial relationship** between this individual and at least one Cook County employee and/or a person or persons holding elective office in the State of Illinois, Cook County, and/or any municipality within Cook County. **The familial relationships are as follows:**

Name of Individual Doing Business with the County	Name of Related County Employee or State, County or Municipal Elected Official	Title and Position of Related County Employee or State, County or Municipal Elected Official	Nature of Familial Relationship*
N/A			

If more space is needed, attach an additional sheet following the above format.

☐ The Person Doing Business with the County **is a business entity** and **there is a familial relationship** between at least one member of this business entity's board of directors, officers, persons responsible for general administration of the business entity, agents authorized to execute documents on behalf of the business entity and/or employees directly engaged in contractual work with the County on behalf of the business entity, on the one hand, and at least one Cook County employee and/or a person holding elective office in the State of Illinois, Cook County, and/or any municipality within Cook County, on the other. **The familial relationships are as follows**:

Name of Member of Board of Director for Business Entity Doing Business with the County	Name of Related County Employee or State, County or Municipal Elected Official	Title and Position of Related County Employee or State, County or Municipal Elected Official	Nature of Familial Relationship*
N/A			

Name of Officer for Business Entity Doing Business with the County	Name of Related County Employee or State, County or Municipal Elected Official	Title and Position of Related County Employee or State, County or Municipal Elected Official	Nature of Familial Relationship*
N/A			

Name of Person Responsible for the General Administration of the Business Entity Doing Business with the County	Name of Related County Employee or State, County or Municipal Elected Official	Title and Position of Related County Employee or State, County or Municipal Elected Official	Nature of Familial Relationship*
N/A			

Name of Agent Authorized to Execute Documents for Business Entity Doing Business with the County	Name of Related County Employee or State, County or Municipal Elected Official	Title and Position of Related County Employee or State, County or Municipal Elected Official	Nature of Familial Relationship*
N/A			

Name of Employee of Business Entity Directly Engaged in Doing Business with the County	Name of Related County Employee or State, County or Municipal Elected Official	Title and Position of Related County Employee or State, County or Municipal Elected Official	Nature of Familial Relationship*
N/A			

If more space is needed, attach an additional sheet following the above format.

VERIFICATION: To the best of my knowledge, the information I have provided on this disclosure form is accurate and complete. I acknowledge that an inaccurate or incomplete disclosure is punishable by law, including but not limited to fines and debarment.

Signature of Recipient

5/19/2025
Date

SUBMIT COMPLETED FORM TO:

Cook County Board of Ethics
69 West Washington Street, Suite 3040, Chicago, Illinois 60602
Office (312) 603-4304 – Fax (312) 603-9988
CookCounty.Ethics@cookcountyil.gov

* Spouse, domestic partner, civil union partner or parent, child, sibling, aunt, uncle, niece, nephew, grandparent or grandchild by blood, marriage (*i.e.* in laws and step relations) or adoption.

SECTION 4

COOK COUNTY AFFIDAVIT FOR WAGE THEFT ORDINANCE

Effective May 1, 2015, every Person, ***including Substantial Owners***, seeking a Contract with Cook County must comply with the Cook County Wage Theft Ordinance set forth in Chapter 34, Article IV, Section 179. Any Person/Substantial Owner, who fails to comply with Cook County Wage Theft Ordinance, may request that the Chief Procurement Officer grant a reduction or waiver in accordance with Section 34-179(d).

"*Contract*" means any written document to make Procurements by or on behalf of Cook County.

"*Person*" means any individual, corporation, partnership, Joint Venture, trust, association, limited liability company, sole proprietorship or other legal entity.

"*Procurement*" means obtaining supplies, equipment, goods, or services of any kind.

"*Substantial Owner*" means any person or persons who own or hold a twenty-five percent (25%) or more percentage of interest in any business entity seeking a County Privilege, including those shareholders, general or limited partners, beneficiaries and principals; except where a business entity is an individual or sole proprietorship, Substantial Owner means that individual or sole proprietor.

All Persons/Substantial Owners are required to complete this affidavit and comply with the Cook County Wage Theft Ordinance before any Contract is awarded. Signature of this form constitutes a certification the information provided below is correct and complete, and that the individual(s) signing this form has/have personal knowledge of such information. **County reserves the right to request additional information to verify veracity of information contained in this Affidavit.**

I. Contract Information:

Contract Number: 2557-03184

County Using Agency (requesting Procurement): Transportation & Highways Maintenance Bureau

II. Person/Substantial Owner Information:

Person (Corporate Entity Name): Midwest Fence Corporation

Substantial Owner Complete Name: Timothty M. Bell

FEIN# 36-2149466

Date of Birth: [redacted] E-mail address: tmbell@mwfence.com

Street Address: 900 N. Kedzie Ave

City: Chicago State: IL Zip: 60651

Home Phone: [redacted]

III. Compliance with Wage Laws:

Within the past five years has the Person/Substantial Owner, in any judicial or administrative proceeding, been convicted of, entered a plea, made an admission of guilt or liability, or had an administrative finding made for committing a repeated or willful violation of any of the following laws:

No	*Illinois Wage Payment and Collection Act, 820 ILCS 115/1 et seq.,*	***YES or NO***
No	*Illinois Minimum Wage Act, 820 ILCS 105/1 et seq.,*	***YES or NO***
No	*Illinois Worker Adjustment and Retraining Notification Act, 820 ILCS 65/1 et seq.,*	***YES or NO***
No	*Employee Classification Act, 820 ILCS 185/1 et seq.,*	**YES or NO**
No	*Fair Labor Standards Act of 1938, 29 U.S.C. 201, et seq.,*	***YES or NO***
No	*Any comparable state statute or regulation of any state, which governs the payment of wages*	***YES or NO***

If the Person/Substantial Owner answered **"Yes"** to any of the questions above, it is ineligible to enter into a Contract with Cook County, but can request a reduction or waiver under **Section IV.**

IV. Request for Waiver or Reduction

If Person/Substantial Owner answered **"Yes"** to any of the questions above, it may request a reduction or waiver in accordance with Section 34-179(d), provided that the request for reduction of waiver is made on the basis of one or more of the following actions that have taken place:

No There has been a bona fide change in ownership or Control of the ineligible Person or Substantial Owner. YES or NO

No Disciplinary action has been taken against the individual(s) responsible for the acts giving rise to the violation. YES or NO

No Remedial action has been taken to prevent a recurrence of the acts giving rise to the disqualification or default. YES or NO

No Other factors that the Person or Substantial Owner believe are relevant. YES or NO

The Person/Substantial Owner must submit documentation to support the basis of its request for a reduction or waiver. The Chief Procurement Officer reserves the right to make additional inquiries and request additional documentation.

V. Affirmation

The Person/Substantial Owner affirms that all statements contained in the Affidavit are true, accurate and complete.

Signature: _____ Date: 5/19/2025

Name of Person signing (Print): Timothy M. Bell Title: President

Subscribed and sworn to before me this 19 day of May, 2025

X Tonie Rhude _____

Notary Public Signature **Notary Seal**

Note: The above information is subject to verification prior to the award of the Contract.

OFFICIAL SEAL
TONIE RHUDE
NOTARY PUBLIC, STATE OF ILLINOIS
Commission No. 0520510
My Commission Expires November 14th, 2028

SECTION 4

COOK COUNTY AFFIDAVIT FOR WAGE THEFT ORDINANCE

Effective May 1, 2015, every Person, ***including Substantial Owners***, seeking a Contract with Cook County must comply with the Cook County Wage Theft Ordinance set forth in Chapter 34, Article IV, Section 179. Any Person/Substantial Owner, who fails to comply with Cook County Wage Theft Ordinance, may request that the Chief Procurement Officer grant a reduction or waiver in accordance with Section 34-179(d).

"*Contract*" means any written document to make Procurements by or on behalf of Cook County.

"*Person*" means any individual, corporation, partnership, Joint Venture, trust, association, limited liability company, sole proprietorship or other legal entity.

"*Procurement*" means obtaining supplies, equipment, goods, or services of any kind.

"*Substantial Owner*" means any person or persons who own or hold a twenty-five percent (25%) or more percentage of interest in any business entity seeking a County Privilege, including those shareholders, general or limited partners, beneficiaries and principals; except where a business entity is an individual or sole proprietorship, Substantial Owner means that individual or sole proprietor.

All Persons/Substantial Owners are required to complete this affidavit and comply with the Cook County Wage Theft Ordinance before any Contract is awarded. Signature of this form constitutes a certification the information provided below is correct and complete, and that the individual(s) signing this form has/have personal knowledge of such information. **County reserves the right to request additional information to verify veracity of information contained in this Affidavit.**

I. Contract Information:

Contract Number: 2557-03184

County Using Agency (requesting Procurement): Transportation & Highways Maintenance Bureau

II. Person/Substantial Owner Information:

Person (Corporate Entity Name): Midwest Fence Corporation

Substantial Owner Complete Name: Mark F. Bell

FEIN# 36-2149466

Date of Birth: [redacted] E-mail address: mark@mwfence.com

Street Address: 900 N. Kedzie Ave

City: Chicago State: IL Zip: 60651

Home Phone: [redacted]

III. Compliance with Wage Laws:

Within the past five years has the Person/Substantial Owner, in any judicial or administrative proceeding, been convicted of, entered a plea, made an admission of guilt or liability, or had an administrative finding made for committing a repeated or willful violation of any of the following laws:

No *Illinois Wage Payment and Collection Act, 820 ILCS 115/1 et seq.,* ***YES or NO***

No *Illinois Minimum Wage Act, 820 ILCS 105/1 et seq.,* ***YES or NO***

No *Illinois Worker Adjustment and Retraining Notification Act, 820 ILCS 65/1 et seq.,* ***YES or NO***

No *Employee Classification Act, 820 ILCS 185/1 et seq.,* **YES or NO**

No *Fair Labor Standards Act of 1938, 29 U.S.C. 201, et seq.,* ***YES or NO***

No *Any comparable state statute or regulation of any state, which governs the payment of wages* ***YES or NO***

If the Person/Substantial Owner answered **"Yes"** to any of the questions above, it is ineligible to enter into a Contract with Cook County, but can request a reduction or waiver under **Section IV.**

IV. Request for Waiver or Reduction

If Person/Substantial Owner answered **"Yes"** to any of the questions above, it may request a reduction or waiver in accordance with Section 34-179(d), provided that the request for reduction of waiver is made on the basis of one or more of the following actions that have taken place:

No There has been a bona fide change in ownership or Control of the ineligible Person or Substantial Owner. YES or NO

No Disciplinary action has been taken against the individual(s) responsible for the acts giving rise to the violation. YES or NO

No Remedial action has been taken to prevent a recurrence of the acts giving rise to the disqualification or default. YES or NO

No Other factors that the Person or Substantial Owner believe are relevant. YES or NO

The Person/Substantial Owner must submit documentation to support the basis of its request for a reduction or waiver. The Chief Procurement Officer reserves the right to make additional inquiries and request additional documentation.

V. Affirmation

The Person/Substantial Owner affirms that all statements contained in the Affidavit are true, accurate and complete.

Signature: Mark Bell Date: 5/19/2025

Name of Person signing (Print): Mark F. Bell Title: Vice-President

Subscribed and sworn to before me this 19 day of May, 2025

X Tonie Rhude

Notary Public Signature **Notary Seal**

Note: The above information is subject to verification prior to the award of the Contract.

OFFICIAL SEAL
TONIE RHUDE
NOTARY PUBLIC, STATE OF ILLINOIS
Commission No. 0520510
My Commission Expires November 14th, 2028

SECTION 4

COOK COUNTY AFFIDAVIT FOR WAGE THEFT ORDINANCE

Effective May 1, 2015, every Person, ***including Substantial Owners***, seeking a Contract with Cook County must comply with the Cook County Wage Theft Ordinance set forth in Chapter 34, Article IV, Section 179. Any Person/Substantial Owner, who fails to comply with Cook County Wage Theft Ordinance, may request that the Chief Procurement Officer grant a reduction or waiver in accordance with Section 34-179(d).

"*Contract*" means any written document to make Procurements by or on behalf of Cook County.

"*Person*" means any individual, corporation, partnership, Joint Venture, trust, association, limited liability company, sole proprietorship or other legal entity.

"*Procurement*" means obtaining supplies, equipment, goods, or services of any kind.

"*Substantial Owner*" means any person or persons who own or hold a twenty-five percent (25%) or more percentage of interest in any business entity seeking a County Privilege, including those shareholders, general or limited partners, beneficiaries and principals; except where a business entity is an individual or sole proprietorship, Substantial Owner means that individual or sole proprietor.

All Persons/Substantial Owners are required to complete this affidavit and comply with the Cook County Wage Theft Ordinance before any Contract is awarded. Signature of this form constitutes a certification the information provided below is correct and complete, and that the individual(s) signing this form has/have personal knowledge of such information. **County reserves the right to request additional information to verify veracity of information contained in this Affidavit.**

I. Contract Information:

Contract Number: 2557-03184

County Using Agency (requesting Procurement): Transportation & Highways Maintenance Bureau

II. Person/Substantial Owner Information:

Person (Corporate Entity Name): Midwest Fence Corporation

Substantial Owner Complete Name: Everett J. Bell

FEIN# 36-2149466

Date of Birth: [redacted] E-mail address: ebell@mwfence.com

Street Address: 900 N. Kedzie Ave

City: Chicago State: IL Zip: 60651

Home Phone: [redacted]

III. Compliance with Wage Laws:

Within the past five years has the Person/Substantial Owner, in any judicial or administrative proceeding, been convicted of, entered a plea, made an admission of guilt or liability, or had an administrative finding made for committing a repeated or willful violation of any of the following laws:

No	*Illinois Wage Payment and Collection Act, 820 ILCS 115/1 et seq.,*	***YES or NO***
No	*Illinois Minimum Wage Act, 820 ILCS 105/1 et seq.,*	***YES or NO***
No	*Illinois Worker Adjustment and Retraining Notification Act, 820 ILCS 65/1 et seq.,*	***YES or NO***
No	*Employee Classification Act, 820 ILCS 185/1 et seq.,*	**YES or NO**
No	*Fair Labor Standards Act of 1938, 29 U.S.C. 201, et seq.,*	***YES or NO***
No	*Any comparable state statute or regulation of any state, which governs the payment of wages*	***YES or NO***

If the Person/Substantial Owner answered **"Yes"** to any of the questions above, it is ineligible to enter into a Contract with Cook County, but can request a reduction or waiver under **Section IV.**

IV. Request for Waiver or Reduction

If Person/Substantial Owner answered **"Yes"** to any of the questions above, it may request a reduction or waiver in accordance with Section 34-179(d), provided that the request for reduction of waiver is made on the basis of one or more of the following actions that have taken place:

No There has been a bona fide change in ownership or Control of the ineligible Person or Substantial Owner. YES or NO

No Disciplinary action has been taken against the individual(s) responsible for the acts giving rise to the violation. YES or NO

No Remedial action has been taken to prevent a recurrence of the acts giving rise to the disqualification or default. YES or NO

No Other factors that the Person or Substantial Owner believe are relevant. YES or NO

The Person/Substantial Owner must submit documentation to support the basis of its request for a reduction or waiver. The Chief Procurement Officer reserves the right to make additional inquiries and request additional documentation.

V. Affirmation

The Person/Substantial Owner affirms that all statements contained in the Affidavit are true, accurate and complete.

Signature: Everett J Bell Date: 5/19/2025

Name of Person signing (Print): Everett J. Bell Title: Secretary

Subscribed and sworn to before me this 19 day of May, 2025

X Tonie Rhude

Notary Public Signature

Notary Seal

Note: The above information is subject to verification prior to the award of the Contract.

OFFICIAL SEAL
TONIE RHUDE
NOTARY PUBLIC, STATE OF ILLINOIS
Commission No. 0520510
My Commission Expires November 14th, 2028

SECTION 4

COOK COUNTY AFFIDAVIT FOR WAGE THEFT ORDINANCE

Effective May 1, 2015, every Person, ***including Substantial Owners***, seeking a Contract with Cook County must comply with the Cook County Wage Theft Ordinance set forth in Chapter 34, Article IV, Section 179. Any Person/Substantial Owner, who fails to comply with Cook County Wage Theft Ordinance, may request that the Chief Procurement Officer grant a reduction or waiver in accordance with Section 34-179(d).

"*Contract*" means any written document to make Procurements by or on behalf of Cook County.

"*Person*" means any individual, corporation, partnership, Joint Venture, trust, association, limited liability company, sole proprietorship or other legal entity.

"*Procurement*" means obtaining supplies, equipment, goods, or services of any kind.

"*Substantial Owner*" means any person or persons who own or hold a twenty-five percent (25%) or more percentage of interest in any business entity seeking a County Privilege, including those shareholders, general or limited partners, beneficiaries and principals; except where a business entity is an individual or sole proprietorship, Substantial Owner means that individual or sole proprietor.

All Persons/Substantial Owners are required to complete this affidavit and comply with the Cook County Wage Theft Ordinance before any Contract is awarded. Signature of this form constitutes a certification the information provided below is correct and complete, and that the individual(s) signing this form has/have personal knowledge of such information. **County reserves the right to request additional information to verify veracity of information contained in this Affidavit.**

I. Contract Information:

Contract Number: 2557-03184

County Using Agency (requesting Procurement): Transportation & Highways Maintenance Bureau

II. Person/Substantial Owner Information:

Person (Corporate Entity Name): Midwest Fence Corporation

Substantial Owner Complete Name: John C. Bell

FEIN# 36-2149466

Date of Birth: [redacted] E-mail address: jbell@mwfence.com

Street Address: 900 N. Kedzie Ave

City: Chicago State: IL Zip: 60651

Home Phone: [redacted]

III. Compliance with Wage Laws:

Within the past five years has the Person/Substantial Owner, in any judicial or administrative proceeding, been convicted of, entered a plea, made an admission of guilt or liability, or had an administrative finding made for committing a repeated or willful violation of any of the following laws:

No	*Illinois Wage Payment and Collection Act, 820 ILCS 115/1 et seq.,*	***YES or NO***
No	*Illinois Minimum Wage Act, 820 ILCS 105/1 et seq.,*	***YES or NO***
No	*Illinois Worker Adjustment and Retraining Notification Act, 820 ILCS 65/1 et seq.,*	***YES or NO***
No	*Employee Classification Act, 820 ILCS 185/1 et seq.,*	**YES or NO**
No	*Fair Labor Standards Act of 1938, 29 U.S.C. 201, et seq.,*	***YES or NO***
No	*Any comparable state statute or regulation of any state, which governs the payment of wages*	***YES or NO***

If the Person/Substantial Owner answered **"Yes"** to any of the questions above, it is ineligible to enter into a Contract with Cook County, but can request a reduction or waiver under **Section IV.**

IV. Request for Waiver or Reduction

If Person/Substantial Owner answered **"Yes"** to any of the questions above, it may request a reduction or waiver in accordance with Section 34-179(d), provided that the request for reduction of waiver is made on the basis of one or more of the following actions that have taken place:

No There has been a bona fide change in ownership or Control of the ineligible Person or Substantial Owner. YES or NO

No Disciplinary action has been taken against the individual(s) responsible for the acts giving rise to the violation. YES or NO

No Remedial action has been taken to prevent a recurrence of the acts giving rise to the disqualification or default. YES or NO

No Other factors that the Person or Substantial Owner believe are relevant. YES or NO

The Person/Substantial Owner must submit documentation to support the basis of its request for a reduction or waiver. The Chief Procurement Officer reserves the right to make additional inquiries and request additional documentation.

V. Affirmation

The Person/Substantial Owner affirms that all statements contained in the Affidavit are true, accurate and complete.

Signature: _____ Date: 5/19/2025

Name of Person signing (Print): John C. Bell Title: Vice-President

Subscribed and sworn to before me this 19 day of May, 2025

x Tonie Rhude _____

Notary Public Signature **Notary Seal**

Note: The above information is subject to verification prior to the award of the Contract.

OFFICIAL SEAL
TONIE RHUDE
NOTARY PUBLIC, STATE OF ILLINOIS
Commission No. 0520510
My Commission Expires November 14th, 2028

File Number 4975-844-8

STATE OF ILLINOIS

OFFICE OF THE SECRETARY OF STATE

To all to whom these Presents Shall Come, Greeting:

I, Alexi Giannoulias, *Secretary of State of the State of Illinois, do hereby certify that I am the keeper of the records of the Department of Business Services. I certify that*

MIDWEST FENCE CORPORATION, INCORPORATED IN DELAWARE AND LICENSED TO TRANSACT BUSINESS IN THIS STATE ON DECEMBER 17, 1970, APPEARS TO HAVE COMPLIED WITH ALL THE PROVISIONS OF THE BUSINESS CORPORATION ACT OF THIS STATE, AND AS OF THIS DATE, IS A FOREIGN CORPORATION IN GOOD STANDING AND AUTHORIZED TO TRANSACT BUSINESS IN THE STATE OF ILLINOIS.

In Testimony Whereof, *I hereto set my hand and cause to be affixed the Great Seal of the State of Illinois, this* 20TH *day of* MAY *A.D.* 2025 .

SEAL OF THE STATE OF ILLINOIS
UNION NATIONAL INDEPENDENT STATE
1868 1818
AUG. 26TH 1818

Authentication #: 2514001188 verifiable until 05/20/2026

Authenticate at: https://www.ilsos.gov

Alexi Giannoulias

SECRETARY OF STATE

Illinois Department of Transportation

Certificate of Eligibility

Contractor No 4055

Midwest Fence Corporation
900 North Kedzie Avenue Chicago, IL 60651

WHO HAS FILED WITH THE DEPARTMENT AN APPLICATION FOR PREQUALIFICATION STATEMENT OF EXPERIENCE, EQUIPMENT AND FINANCIAL CONDITION IS HEREBY QUALIFIED TO BID AT ANY OF DEPARTMENT OF TRANSPORTATION LETTINGS IN THE CLASSES OF WORK AND WITHIN THE AMOUNT AND OTHER LIMITATIONS OF EACH CLASSIFICATION, AS LISTED BELOW, FOR SUCH PERIOD AS THE UNCOMPLETED WORK FROM ALL SOURCES DOES NOT EXCEED $71,120,000.00

022	FENCING	$22,400,000
023	GUARDRAIL	$15,925,000

THIS CERTIFICATE OF ELIGIBILITY IS VALID FROM 7/16/2024 TO 7/31/2025 INCLUSIVE, AND SUPERSEDES ANY CERTIFICATE PREVIOUSLY ISSUED, BUT IS SUBJECT TO REVISION OR REVOCATION, IF AND WHEN CHANGES IN THE FINANCIAL CONDITION OF THE CONTRACTING FIRM OR OTHER FACTS JUSTIFY SUCH REVISIONS OR REVOCATION.
ISSUED AT SPRINGFIELD, ILLINOIS ON 7/17/2024.

Engineer of Construction

IL 494-0645

SECTION 5

CONTRACT AND EDS EXECUTION PAGE

The Applicant hereby certifies and warrants that all of the statements, certifications and representations set forth in this EDS are true, complete and correct; that the Applicant is in full compliance and will continue to be in compliance throughout the term of the Contract or County Privilege issued to the Applicant with all the policies and requirements set forth in this EDS; and that all facts and information provided by the Applicant in this EDS are true, complete and correct. The Applicant agrees to inform the Chief Procurement Officer in writing if any of such statements, certifications, representations, facts or information becomes or is found to be untrue, incomplete or incorrect during the term of the Contract or County Privilege.

Execution by Corporation

Midwest Fence Corporation
Corporation's Name

Timothy M. Bell
President's Printed Name and Signature

773-722-6616
Telephone

ebell@mwfence.com
Email

Everett J Bell
Secretary Signature

5/19/2025
Date

Execution by LLC

LLC Name

*Member/Manager Printed Name and Signature

Date

Telephone and Email

Execution by Partnership/Joint Venture

Partnership/Joint Venture Name

*Partner/Joint Venturer Printed Name and Signature

Date

Telephone and Email

Execution by Sole Proprietorship

Printed Name Signature

Assumed Name (if applicable)

Date

Telephone and Email

Subscribed and sworn to before me this
19 day of May, 20 25.

Tonie Rhude
Notary Public Signature

My commission expires:

OFFICIAL SEAL
TONIE RHUDE
NOTARY PUBLIC, STATE OF ILLINOIS
Commission No. 0520510
My Commission Expires November 14th, 2028

Notary Seal

*If the operating agreement, partnership agreement or governing documents requiring execution by multiple members, managers, partners, or joint venturers, please complete and execute additional Contract and EDS Execution Pages.

SECTION 6
COOK COUNTY SIGNATURE PAGE

ON BEHALF OF THE COUNTY OF COOK, A BODY POLITIC AND CORPORATE OF THE STATE OF ILLINOIS, THIS CONTRACT IS HEREBY EXECUTED BY:

Raffi Sarrafian Digitally signed by Raffi Sarrafian Date: 2025.10.09 08:32:27 -05'00'

Cook County Chief Procurement Officer

Date

APPROVED AS TO FORM:

James Beligratis

Assistant State's Attorney
(Required on contracts over $1,000,000

9/19/2025

Date

CONTRACT TERM & AMOUNT

2557-03184

Contract #

September 1, 2025 - August 31, 2027

Original Contract Term

One (1) - Two Year Renewal Option

Renewal Options (If Applicable)

$2,282,197.25

Contract Amount

September 18, 2025

Cook County Board Approval Date (If Applicable)

APPROVED BY THE BOARD OF
COOK COUNTY COMMISSIONERS
SEP 18 2025
COM _____