REFERENCE CONTRACT FOR EQUIPMENT AND SUPPLIES

CONTRACT NO. 2406-07250
PURCHASE ORDER NO. 70000340351

OFFICE OF THE CHIEF PROCUREMENT OFFICER

PORTABLE VEHICLE IMPACT DEVICES

FOR

COOK COUNTY DEPARTMENT OF EMERGENCY MANAGEMENT AND REGIONAL SECURITY

WITH: MERIDIAN RAPID DEFENSE GROUP, LLC

BASED ON THE CITY OF CHICAGO CONTRACT NO. 201170, SPECIFICATION NO. 1219096

TONI PRECKWINKLE, COOK COUNTY BOARD PRESIDENT

RAFFI SARRAFIAN, CHIEF PROCUREMENT OFFICER

FEDERALLY FUNDED CONTRACT

PART I
AGREEMENT

THIS CONTRACT is made and entered into by and between the County of Cook, a public body corporate of the State of Illinois, herein after the "County" and Meridian Rapid Defense Group LLC, herein after the "Contractor".

WHEREAS, the County, pursuant to Section 34-140 (the "Reference Contract Ordinance") of the Cook County Procurement Code, states: "If a governmental agency has awarded a contract through a competitive method for the same or similar supplies, equipment, goods or services as that sought by the County, the Procurement may be made from that vendor at a price or rate at least as favorable as that obtained by that government agency without utilizing a competitive procurement method set forth in this Procurement Code;" and

WHEREAS, the City of Chicago, IL (the City of Chicago) solicited a formal Invitation for Bids for Portable Vehicle Impact Devices and the Contractor was identified as the lowest responsive and responsible bidder for the supplies; and

WHEREAS, the City Chicago, entered into a contract on September 21, 2022 for the provision of equipment by the Contractor for City Chicago, relative to Vehicle Impact Portable Devices a copy of the contract is attached hereto as Attachment I for reference purposes only, but the terms of the City of Chicago contract are not made a part of or incorporated into this Contract; and

WHEREAS, the County wishes to leverage the procurement efforts of the City of Chicago ; and

WHEREAS, the County, through the Emergency Management Regional Security desires certain similar equipment of the Contractor; and

WHEREAS, County Offices, Departments, and Agencies may utilize this Contract for specific contracted procurement efforts; and

WHEREAS, the Contractor agrees to provide the equipment incorporated as Exhibit I, Specifications; and

WHEREAS, the Contractor warrants that it is ready, willing and able to deliver the equipment set forth in Exhibit 1, Specifications, all on pricing and payment terms equivalent to or more favorable to the County than those contained in the City of Chicago Contract No. 201170.

NOW, THEREFORE, in consideration of the premises and the mutual undertakings herein set forth, the parties agree as follows:

I. CONTRACT SERVICES

The Contractor agrees to provide the following Contract Services:

AS SET FORTH IN EXHIBIT 1.

II. CONTRACT PERIOD

This Contract shall be effective after proper execution of the contract documents by the County from **January 1, 2025** through **November 30, 2025 with one (1) ten month renewal option.**

III. PAYMENT

In no case shall such charges exceed the amount of **$442,394.57.** The County shall have the right to examine the books of the Contractor for the purpose of auditing the same with reference to all charges made to the County.

In the event the Contractor receives payment under the Contract, reimbursement for which is later disallowed by the County, the Contractor shall promptly refund the disallowed amount to the County on request, or at the County's option, the County may credit the amount disallowed from the next payment due or to become due to the Contractor under any contract with the County.

IV. MBE/WBE REQUIREMENTS FOR THIS CONTRACT

The Contractor shall have a subcontracting goal of not less than 0% MBE and 0% WBE of the Contract price for work to be performed.

IV. GENERAL CONDITIONS

This Contract incorporates and is subject to the provisions attached hereto, Part II General Terms and Conditions, and is incorporated herein by this reference.

V. INCORPORATION OF EXHIBITS

This Contract incorporates the following Exhibits:

1. EXHIBIT I SPECIFICATION
2. EXHIBIT II SCHEDULE OF COMPENSATION
3. EXHIBIT III BOARD APPROVAL LETTER
4. EXHIBIT IV IDENTIFICATION OF SUBCONTRACTOR/SUPPLIER/SUBCONSULTANT
5. EXHIBIT V MINORITY AND WOMEN OWNED BUSINESS ENTERPRISE COMMITMENT
6. EXHIBIT VI EVIDENCE OF INSURANCE
7. EXHIBIT VII ELECTRONIC PAYABLES PROGRAM ("E-PAYABLES")
8. EXHIBIT VIII ECONOMIC DISCLOSURE STATEMENT ("EDS")

ATTACHMENTS

1. ATTACHMENT I The City of Chicago Contract No. 201170

PART II - General Terms and Conditions

GC-01 SUBCONTRACTING OR ASSIGNMENT OF CONTRACT OR CONTRACT FUNDS

Once awarded, this Contract shall not be subcontracted or any part thereof assigned without the express written approval of the County Chief Procurement Officer ("Chief Procurement Officer"). In no case, however, shall such approval relieve the Contractor from his obligations or change the terms of the Contract. The Contractor shall not transfer or assign any Contract funds or claims due or to become due without the advance written approval of the Chief Procurement Officer. The unauthorized subcontracting or assignment of the Contract, in whole or in part, or the unauthorized transfer or assignment of any Contract funds, either in whole or in part, or any interest therein, which shall be due or are to become due the Contractor shall have no effect on the County and are null and void.

The Contractor shall identify any and all contractors and subcontractors it intends to use in the performance of the Contract by completing the Identification of Subcontractor/Supplier/Subconsultant Form (“ISF”). All such persons shall be subject to the prior approval of the County. The Contractor will only subcontract with competent and responsible Subcontractors. The Chief Procurement Officer may require in his or her sole discretion, that the Contractor provide copies of all contracts with subcontractors.

The Contractor and its employees, contractors, subcontractors, agents and representatives are, for all purposes arising out of this Contract, independent contractors and are not employees of the County. It is expressly understood and agreed that the Contractor and its employees, contractors, subcontractors, agents and representatives shall in no event as a result of a contract be entitled to any benefit to which County employees are entitled, including, but not limited to, overtime, retirement benefits, worker’s compensation benefits and injury leave or other leave benefits.

GC-02 INDEMNIFICATION

The Contractor covenants and agrees to indemnify and save harmless the County and its commissioners, officials, employees, agents and representatives, and their respective heirs, successors and assigns, from and against any and all costs, expenses, attorney's fees, losses, damages and liabilities incurred or suffered directly or indirectly from or attributable to any claims arising out of or incident to the performance or nonperformance of the Contract by the Contractor, or the acts or omissions of the officers, agents, employees, contractors, subcontractors, licensees or invitees of the Contractor. The Contractor expressly understands and agrees that any Performance Bond or insurance protection required of the Contractor, or otherwise provided by the Contractor, shall in no way limit the responsibility to indemnify the County as hereinabove provided.

GC-03 INSPECTION AND RESPONSIBILITY

The County shall have a right to inspect and approve any Contract goods, equipment, supplies or services used in carrying out this Contract and shall approve the quality and standards of all materials or completed work furnished under this Contract. Contract goods, equipment, supplies or services not complying herewith may be rejected by the Chief Procurement Officer and/or the Director and shall be replaced and/or re-performed by the Contractor at no cost to the County. Any Contract goods, equipment or supplies rejected shall be removed within a reasonable time from the premises of the County at the entire expense of the Contractor, after notice has been given by the County to the Contractor that such Contract goods, equipment or supplies have been rejected.

GC-04 PAYMENT TO CONTRACTORS AND SUBCONTRACTORS

All invoices submitted by the Contractor shall be in accordance with the cost provisions contained in the Contract Documents and shall contain a detailed description of the Deliverables (i.e., the goods, equipment, supplies or services) including the quantity of the Deliverables, for which payment is requested. All invoices for services shall include itemized entries indicating the date or time period in which the services were provided, the amount of time spent performing the services, and a detailed description of the services provided during the period of the invoice. All Contracts for services that are procured as Sole Source must also contain a provision requiring the Contractor to submit itemized records indicating the dates that services were provided, a detailed description of the work performed on each such date, and the amount of time spent performing work on each such date. All invoices shall reflect the amounts invoiced by and the amounts paid to the Contractor as of the date of the invoice. Invoices for new charges shall not include “past due” amounts, if any, which amounts must be set forth on a separate invoice. Contractor shall not be entitled to invoice the County for any late fees or other penalties.

GC-04 PAYMENT TO CONTRACTORS AND SUBCONTRACTORS (con't.)

In accordance with Section 34-177 of the Cook County Procurement Code, the County shall have a right to set off and subtract from any invoice(s) or Contract price, a sum equal to any fines and penalties, including interest, for any tax or fee delinquency and any debt or obligation owed by the Contractor to the County.

The Contractor acknowledges its duty to ensure the accuracy of all invoices submitted to the County for payment. By submitting the invoices, the Contractor certifies that all itemized entries set forth in the invoices are true and correct. The Contractor acknowledges that by submitting the invoices, it certifies that it has delivered the Deliverables, i.e., the goods, supplies or equipment set forth in the Contract to the Using Agency, or that it has properly performed the services set forth in the Contract. The invoice must also reflect the dates and amount of time expended in the provision of services under the Contract. The Contractor acknowledges that any inaccurate statements or negligent or intentional misrepresentations in the invoices shall result in the County exercising all remedies available to it in law and equity including, but not limited to, a delay in payment or non-payment to the Contractor, and reporting the matter to the Cook County Office of the Independent Inspector General.

When a Contractor receives any payment from the County for any supplies, equipment, goods, or services, it has provided to the County pursuant to its Contract, the Contractor must make payment to its subcontractors within 15 days after receipt of payment from the County, provided that such subcontractor has satisfactorily provided the supplies, equipment, goods or services in accordance with the Contract and provided the Contractor with all of the documents and information required of the Contractor. The Contractor may delay or postpone payment to a subcontractor when the subcontractor's supplies, equipment, goods, or services do not comply with the requirements of the Contract, the Contractor is acting in good faith, and not in retaliation for a subcontractor exercising legal or contractual rights.

GC-05 PREPAID FEES

In the event this Contract is terminated by either party, for cause or otherwise, and the County has prepaid for any goods, equipment, supplies or services to be provided pursuant to this Contract, Contractor shall refund to the County, on a prorated basis to the effective date of termination, all amounts prepaid for such goods, equipment, supplies or services not actually provided as a result of the termination. The refund shall be made within fourteen (14) days of the effective date of termination.

GC-06 TAXES

Federal Excise Tax does not apply to materials purchased by the County by virtue of Exemption Certificate No. 36-75-0038K. Illinois Retailers' Occupation Tax, Use Tax and Municipal Retailers' Occupation Tax do not apply to materials or services purchased by the County by virtue of statute. The price or prices quoted herein shall include any and all other federal and/or state, direct and/or indirect taxes which apply to this Contract. The County's State of Illinois Sales Tax Exemption Identification No. is E-9998-2013-07.

GC-07 PRICE REDUCTION

If at any time after the Contract award, Contractor makes a general price reduction in the price of any goods, equipment, supplies or services covered by the Contract, the equivalent price reduction based on similar quantities and/or considerations shall be applied to this Contract for the term of the Contract. Such price reductions shall be effective at the same time and in the same manner as the reduction in the price to customers generally.

GC-08 CONTRACTOR CREDITS

To the extent the Contractor gives credits toward future purchases from its financial incentives, discounts, value points or other benefits based on the purchase of the goods, equipment, supplies or services provided for under this Contract, such credits belong to the County and not any specific Using Agency. Contractor shall report any such credits to the Chief Procurement Officer.

GC-09 DISPUTES

Any dispute arising under the Contract between the County and Contractor shall be decided by the Chief Procurement Officer. The complaining party shall submit a written statement detailing the dispute and specifying the specific relevant Contract provision(s) to the Chief Procurement Officer. Upon request of the Chief Procurement Officer, the party complained against shall respond to the complaint in writing within five days of such request. The Chief Procurement Officer will reduce his decision to writing and mail or otherwise furnish a copy thereof to the Contractor and Director.

Dispute resolution as provided herein shall be a condition precedent to any other action at law or in equity. Notwithstanding a dispute, Contractor shall continue to discharge all its obligations, duties and responsibilities set forth in the Contract during any dispute resolution proceeding unless otherwise agreed to by the County in writing.

GC-10 CONTRACT AMENDMENTS

The parties may during the term of the Contract make amendments to the Contract but only as provided in this section. Such amendments shall only be made by mutual agreement in writing.

In the case of Contracts not approved by the Board, the Chief Procurement Officer may amend a contract provided that any such amendment does not extend the Contract by more than one (1) year, and further provided that the total cost of all such amendments does not increase the total amount of the Contract beyond $150,000. Such action may only be made with the advance written approval of the Chief Procurement Officer. If the amendment extends the Contract beyond one (1) year or increases the total award amount beyond $150,000, then Board approval will be required.

No Using Agency or employee thereof has authority to make any amendments to the Contract. Any modifications or amendments to the Contract made without the express written approval of the Chief Procurement Officer is void and unenforceable.

Contractor is hereby notified that, except for amendments which are made in accordance with this GC-10 Modifications and Amendments, no Using Agency or employee thereof has authority to make any modification or amendment to the Contract.

GC-11 DEFAULT

Contractor shall be in default hereunder in the event of a material breach by Contractor of any term or condition of this Contract where Contractor has failed to cure such breach within ten (10) days after written notice of breach is given to Contractor by the County, setting forth the nature of such breach.

A material breach of the contract by the Contractor includes but is not limited to the following:

1. Failure to begin performance under the Contract within the specified time;

2. Failure to perform under the Contract with sufficient personnel, equipment, or materials to ensure completion of said performance within the specified time or failure to assign qualified personnel to ensure completion within the specified time;

3. Performance of the Contract in an unsatisfactory manner;

4. Refusal to perform services deemed to be defective or unsuitable;

5. Discontinuance of performance of Contractor’s obligations under the Contract or the impairment or the reasonable progress of performance;

6. Becoming insolvent, being declared bankrupt or committing any act of bankruptcy or insolvency;

7. Any assignment of the Contract for the benefit of creditors;

8. Any cause whatsoever which impairs performance in an acceptable manner; or

9. Any other material breach of any term or condition of the Contract.

County shall be in default hereunder if any material breach of the Contract by the County occurs which is not cured by the County within forty-five (45) days after written notice of breach has been given by Contractor to the County, setting forth the nature of such breach.

GC-12 COUNTY'S REMEDIES

If the Contractor fails to remedy a material breach during the ten (10) day cure period pursuant to General Condition GC-11, Default, the County shall have the right to terminate the Contract provided, however, that the County shall give Contractor prior written notice of its intent to terminate. Following notice of breach to Contractor, the County reserves

the right to withhold payments owed to Contractor until such time as Contractor has cured the breach which is the subject matter of the notice. In addition, the County shall have the right to pursue all remedies in law or equity.

GC-13 CONTRACTOR'S REMEDIES

If the County has been notified of breach and fails to remedy the breach during the forty-five (45) day cure period pursuant to General Condition GC-11, Default, the Contractor shall have the right to terminate this Contract providing, however, that Contractor shall give the County thirty (30) days prior written notice of termination.
Contractor shall have the right to pursue all remedies available in law or equity. In all cases the Contractor's damages shall be those provable damages not to exceed the value of the Contract as awarded by the Cook County Board of Commissioners or the Chief Procurement Officer.

GC-14 DELAYS

Contractor agrees that no charges or claims for damages shall be made by Contractor for any delays or hindrances from any cause whatsoever related to the performance of the Contract.

GC-15 INSURANCE REQUIREMENTS

Waiver of Subrogation

All insurance policies shall contain a Waiver of Subrogation Endorsement in favor of Cook County.

Insurance Requirements of the Contractor

No later than the effective date of this Contract, the Contractor, at its cost, shall secure and maintain at all times, unless specified otherwise, until completion of the term of this Contract the insurance specified below.
Nothing contained in these insurance requirements is to be construed as limiting the extent of the Contractor's responsibility for payment of damages resulting from its performance of this Contract. The insurance purchased and maintained by the Contractor shall be primary and not excess or pro rata to any other insurance issued to the County. Contractor shall require all subcontractors to provide the insurance required in this Contract, or Contractor may provide the coverages for the subcontractors. All subcontractors are subject to the same insurance requirements as Contractor except paragraph (d) Excess Liability or unless specified otherwise. The Cook County Department of Risk Management maintains the right to modify, delete, alter or change these requirements.

1. **Coverages**

(a) **Workers Compensation Insurance**
Workers' Compensation shall be in accordance with the laws of the State of Illinois or any other applicable jurisdiction.

The Workers Compensation policy shall also include the following provisions:

Employers' Liability coverage with a limit of:
(1) $500,000 each Accident
(2) $500,000 each Employee
(3) $500,000 Policy Limit for Disease

(b) **Commercial General Liability Insurance**
The Commercial General Liability shall be on an occurrence form basis to cover bodily injury and property damage including loss of use.

The General Liability limits shall not be less than $1,000,000 per occurrence and $2,000,000 aggregate combined single limit for bodily injury and property damage. The General Liability policy shall include, without limitation the following coverages:

(1) All premises and operations;
(2) Contractual Liability;
(3) Products/Completed Operations;
(4) Severability of interest/separation of insureds clause.

(c) **Automobile Liability Insurance**
When any vehicles are used in the performance of the Contract, Contractor shall secure Automobile Liability Insurance to cover all owned, non-owned and hired automobiles, trucks and trailers. The limits of liability shall not be less than the following:

(1) Liability - All Autos: Bodily Injury & Property Damage - $1,000,000 per Occurrence
(2) Uninsured/Motorists: Per Illinois Requirements

(d) **Umbrella/Excess Liability Insurance**
In addition to the coverages and limits specified above, Contractor shall secure and maintain a limit of liability no less than $1,000,000 each occurrence for all liability.

2. Additional requirements

(a) **Additional Insured**

Cook County, its officials, employees and agents shall be named as additional insureds under the Commercial General Liability policy and Automobile Liability policy. Contractor's insurance shall be primary and non-contributory with any insurance maintained by Cook County. Any insurance or self-insurance maintained by Cook County shall be excess of the Contractor's insurance and shall not contribute with it. The full policy limits and scope of protection shall apply to Cook County as an additional insured even if they exceed the minimum insurance limits specified above.

(b) **Qualification of Insurers**

All insurance companies providing coverage shall be licensed or approved by the Department of Insurance, State of Illinois, and shall have a financial rating no lower than (A-) VII as listed in A.M. Best's Key Rating Guide, current edition or interim report. Companies with ratings lower than (A-) VII will be acceptable only upon written consent of the Cook County Department of Risk Management.

(c) **Insurance Notices**

All policies of insurance which may be required under terms of this Contract shall be endorsed to provide that the insurance company shall notify the Cook County Office of the Chief Procurement Officer, 161 North Clark Street, Suite 2300, Chicago, Illinois 60601 at least 30 days prior to the effective date of any cancellation or modification of such policies. Prior to the date on which Contractor commences performance of its part of the work, Contractor shall furnish to the County certificates of insurance maintained by Contractor.

In no event shall any failure of the County to receive Certificates of Insurance required hereof or to demand receipt of such Certificates of Insurance be construed as a waiver of Contractor's obligations to obtain insurance pursuant to these insurance requirements.

GC-16 PATENTS, COPYRIGHTS AND LICENSES

Contractor agrees to hold harmless and indemnify the County, its officials, agents, employees and affiliates from and defend, as permitted by Illinois law, at its own expense (including reasonable attorneys', accountants' and consultants' fees), any suit or proceeding brought against County based upon a claim that the ownership and/or use of equipment, hardware and software or any part thereof utilized in performing Contractor's services constitutes an infringement of any patent, copyright or license or any other intellectual property right.

In the event the use of any equipment, hardware or software or any part thereof is enjoined, Contractor with all reasonable speed and due diligence shall provide or otherwise secure for County, at the Contractor's election, one of the following: the right to continue use of the equipment, hardware or software; an equivalent system having the Specifications as provided in this Contract; or to modify the system or its component parts so that it becomes non-infringing while performing in a substantially similar manner to the original system, meeting the Specifications of this Contract.

GC-17 COMPLIANCE WITH LAWS

The Contractor shall observe and comply with the laws, ordinances, regulations and codes of the Federal, State, County and other local government agencies which may in any manner affect the performance of the Contract, including but not limited to those County Ordinances set forth in the Certifications, Affidavits or EDS attached hereto and incorporated herein. Assurance of compliance with this requirement by the Contractor's employees, agents or subcontractors shall be the responsibility of the Contractor.

The Contractor shall secure and pay for all federal, state and local licenses, permits and fees required in order to perform this Contract.

GC-18 DELIVERY

All Contract goods, equipment or supplies shipped to the County shall be shipped F.O.B., DESTINATION, FREIGHT PREPAID. Arrangements shall be made in advance by the Contractor in order that the County may arrange for receipt of the materials.

Truck deliveries will be accepted before 3:00 P.M. on weekdays only. No deliveries will be accepted on Saturdays, Sundays or County Holidays. The County is not responsible for delivery delays due to waiting times for loading and unloading at delivery locations.

The quantity of Contract goods, equipment or supplies based on weight that are delivered by truck will be ascertained from a weight certificate issued by a duly licensed Public Weight-Master. In the case of delivery by rail, weight will be ascertained from bill of lading from originating line, but the County reserves the right to re-weigh at the nearest available railroad scale.

The County reserves the right to add new delivery locations or delete previously listed delivery locations as required during the Contract period. The only restriction regarding the County's right to add new delivery locations shall be that any new or additional location shall be within the geographical boundaries of the County of Cook.

GC-19 MINORITY AND WOMEN BUSINESS ENTERPRISES COOK COUNTY ORDINANCE CHAPTER 34, DIVISION 8 SECTION 34-260 to SECTION 34-300

I. POLICY AND GOALS

A. It is the policy of the County of Cook to prevent discrimination in the award of or participation in County Contracts and to eliminate arbitrary barriers for participation in such Contracts by local businesses certified as a Minority Business Enterprise (MBE) and Women-owned Business Enterprise (WBE) as both prime and sub-contractors. In furtherance of this policy, the Cook County Board of Commissioners has adopted a Minority- and Women-owned Business Enterprise Ordinance (the "Ordinance") which establishes annual goals for MBE and WBE participation as outlined below:

Contract Type	**Goals**	
	MBE	WBE
Goods and Services	25%	10%
Construction	24%	10%
Professional Services	35% Overall	

B. **The County shall set contract-specific goals, based on the availability of MBEs and WBEs that are certified to provide commodities or services specified in this solicitation document. The MBE/WBE participation goals for each Contract are stated in Part I.** A Bid, Quotation, or Proposal shall be rejected if the County determines that it fails to comply with this General Condition in any way, including but not limited to: (i) failing to state an enforceable commitment to achieve for this contract the identified MBE/WBE Contract goals; or (ii) failing to include a Petition for Reduction/Waiver, which states that the goals for MBE/WBE participation are not attainable despite the Bidder or Proposer Good Faith Efforts, and explains why. If a Bid, Quotation, or Proposal is rejected, then a new Bid, Quotation, or Proposal may be solicited if the public interest is served thereby.

GC-19 MINORITY AND WOMEN BUSINESS ENTERPRISES
COOK COUNTY ORDINANCE CHAPTER 34, DIVISION 8 SECTION 34-260 to SECTION 34-300 (con't.)

C. To the extent that a Bid, Quotation, or Proposal includes a Petition for Reduction/Waiver that is approved by the Office of Contract Compliance, the Contract specific MBE and WBE participation goals may be achieved by the proposed Bidder or Proposer's status as an MBE or WBE; by the Bidder or Proposer's enforceable joint-venture agreement with one or more MBEs and/or WBEs; by the Bidder or Proposer entering into one or more enforceable subcontracting agreements with one or more MBE and WBE; by the Bidder or Proposer establishing and carrying out an enforceable mentor/protégé agreement with one or more MBE and WBE; by the Bidder or Proposer actively engaging the Indirect Participation of one or more MBE and WBE in other aspects of its business; or by any combination of the foregoing, so long as the Utilization Plan evidences a commitment to meet the MBE and WBE Contract goals set forth in (B) above, as approved by the Office of Contract Compliance.

D. A single Person, as defined in the Procurement Code, may not be utilized as both an MBE and a WBE on the same Contract, whether as a contractor, subcontractor or supplier.

E. Unless specifically waived in the Bid or Proposal Documents, this General Condition, GC-19; the Ordinance; and the policies and procedures promulgated thereunder shall govern. If there is a conflict between this GC-19 and the Ordinance or the policies and procedures, the Ordinance shall control.

F. A Contractor's failure to carry out its commitment regarding MBE and WBE participation in the course of the Contract's performance may constitute a material breach of the Contract. If such breach is not appropriately cured, it may result in withholding of payments under the Contract, contractual penalties, disqualification and any other remedy provided for in Division 4 of the Procurement Code at law or in equity.

II. REQUIRED BID OR PROPOSAL SUBMITTALS

A Bidder or Proposer shall document its commitment to meeting the Contract specific MBE and WBE participation goals by submitting a Utilization Plan with the Bid or Proposal. The Utilization Plan shall include (1) one or more Letter(s) of Intent from the relevant MBE and WBE firms; and (2) current Letters of Certification as an MBE or WBE. Alternatively, the Bidder or Proposer shall submit (1) a written Petition for Reduction/Waiver with the Bid, Quotation or Proposal, which documents its preceding Good Faith Efforts and an explanation of its inability to meet the goals for MBE and WBE participation. The Utilization Plan shall be submitted at the time that the bid or proposal is due**. Failure to include a Utilization Plan will render the submission not Responsive and shall be cause for the CPO to reject the Bid or Proposal**.

A. MBE/WBE Utilization Plan

Each Bid or Proposal shall include a complete Utilization Plan, as set forth on Form 1 of the M/WBE Compliance Forms. The Utilization Plan shall include the name(s), mailing address, email address, and telephone number of the principal contact person of the relevant MBE and WBE firms. If the Bidder or Proposer submits a Bid or Proposal, and any of their subcontractors, suppliers or consultants, are certified MBE or WBE firms, they shall be identified as an MBE or WBE within the Utilization Plan.

1. Letter(s) of Intent

Except as set forth below, a Bid or Proposal shall include, as part of the Utilization Plan, one or more Letter(s) of Intent, as set forth on Form 2 of the M/WBE Compliance Forms, executed by each MBE and WBE and the Bidder or Proposer. The Letter(s) of Intent will be used to confirm that each MBE and WBE shall perform work as a subcontractor, supplier, joint venture, or consultant on the Contract. Each Letter of Intent shall indicate whether and the degree to which the MBE or WBE will provide goods or services directly or indirectly during the term of the Contract. The box for direct participation shall be marked if the proposed MBE or WBE will provide goods or services directly related to the scope of the Contract. The box for Indirect participation shall be marked if the proposed MBE or WBE will not be directly involved in the Contract but will be utilized by the Bidder or Proposer for other services not related to the Contract. Indirect Participation shall not be counted toward the participation goal. Each Letter of Intent shall accurately detail the work to be performed by the relevant MBE or WBE firm, the agreed dollar amount, the percentage of work, and the terms of payment.

GC-19 MINORITY AND WOMEN BUSINESS ENTERPRISES
COOK COUNTY ORDINANCE CHAPTER 34, DIVISION 8 SECTION 34-260 to SECTION 34-300 (con't.)

Failure to include Letter(s) of Intent will render the submission not Responsive and shall be cause for the CPO to reject the Bid or Proposal.

.

All Bids and Proposals must conform to the commitments made in the corresponding Letter(s) of Intent, as may be amended through change orders.

The Contract Compliance Director may at any time request supplemental information regarding Letter(s) of Intent, and such information shall be furnished if the corresponding Bid or Proposal is to be deemed responsive.

2. Letter(s) of Certification

Only current Letter(s) of Certification from one of the following entities may be accepted as proof of certification for MBE/WBE status, provided that Cook County's requirements for certification are met:

- County of Cook
- City of Chicago

Persons that are currently certified by the City of Chicago in any area other than Construction/Public Works shall also complete and submit a MBE/WBE Reciprocal Certification Affidavit along with a current letter of certification from the City of Chicago. This Affidavit form can be downloaded from www.cookcountyil.gov/contractcompliance.

The Contract Compliance Director may reject the certification of any MBE or WBE on the ground that it does not meet the requirements of the Ordinance, or the policies and rules promulgated thereunder.

3. Joint Venture Affidavit

In the event a Bid or Proposal achieves MBE and/or WBE participation through a Joint Venture, the Bid or Proposal shall include the required Joint Venture Affidavit, which can be downloaded from www.cookcountyil.gov/contractcompliance. The Joint Venture Affidavit shall be submitted with the Bid or Proposal, along with current Letter(s) of Certification.

B. Petition for Reduction/Waiver

In the event a Bid or Proposal does not meet the Contract specific goals for MBE and WBE participation, the Bid or Proposal shall include a Petition for Reduction/Waiver, as set forth on Form 3. The Petition for Reduction/Waiver shall be supported by sufficient evidence and documentation to demonstrate the Bidder or Proposer's Good Faith Efforts in attempting to achieve the applicable MBE and WBE goals, and its inability to do so despite its Good Faith Efforts.

Failure to include Petition for Reduction/Waiver will render the submission not Responsive and shall be cause for the CPO to reject the Bid or Proposal.

III. REDUCTION/WAIVER OF MBE/WBE GOALS

A. Granting or Denying a Reduction/Waiver Request.

1. The adequacy of the Good Faith Efforts to utilize MBE and WBE firms in a Bid or Proposal will be evaluated by the CCD under such conditions as are set forth in the Ordinance, the policies and rules promulgated thereunder, and in the "Petition for Reduction/Waiver of MBE/WBE Participation Goals" – Form 3 of the M/WBE Compliance Forms.

2. With respect to a Petition for Reduction/Waiver, the sufficiency or insufficiency of a Bidder or Proposer's Good Faith Efforts shall be evaluated by the CCD as of the date upon which the corresponding Bid or Proposal was due.

GC-19 MINORITY AND WOMEN BUSINESS ENTERPRISES
COOK COUNTY ORDINANCE CHAPTER 34, DIVISION 8 SECTION 34-260 to SECTION 34-300 (con't.)

3. The Contract Compliance Director or his or her duly authorized Waiver Committee may grant or deny the 1)
4. Petition for Reduction/Waiver based upon factors including but not limited to: (a) whether sufficient qualified MBE and WBE firms are unavailable despite good faith efforts on the part of the Bidder or Proposer; (b) the degree to which specifications and the reasonable and necessary requirements for performing the Contract make it impossible or economically infeasible to divide the Contract into sufficiently small tasks or quantities so as to enable the Bidder or Proposer to utilize MBE and WBE firms in accordance with the applicable goals; (c) the degree to which the prices or prices required by any potential MBE or WBE are more that 10% above competitive levels; and (d) such other factors as are determined relevant by the Contract Compliance Director or the duly authorized Waiver Committee.

5. If the Contract Compliance Director or the duly authorized Waiver Committee determines that the Bidder or Proposer has not demonstrated sufficient Good Faith Efforts to meet the applicable MBE and WBE goals, the Contract Compliance Director or the duly authorized Waiver Committee may deny a Petition for Reduction/Waiver, declare the Bid or Proposal non-responsive, and recommend rejection of the Bid, Quotation, or Proposal.

IV. CHANGES IN CONTRACTOR'S UTILIZATION PLAN

A. A Contractor, during its performance of the Contract, may not change the original MBE or WBE commitments specified in the relevant Utilization Plan, including but not limited to, terminating a MBE or WBE Contract, reducing the scope of the work to be performed by a MBE/WBE, or decreasing the price to a MBE/WBE, except as otherwise provided by the Ordinance and according to the policies and procedures promulgated thereunder.

B. Where a Person listed under the Contract was previously considered to be a MBE or WBE but is later found not to be, or work is found not to be creditable toward the MBE or WBE goals as stated in the Utilization Plan, the Contractor shall seek to discharge the disqualified enterprise, upon proper written notification to the Contract Compliance Director, and make every effort to identify and engage a qualified MBE or WBE as its replacement. Failure to obtain an MBE or WBE replacement within 30 business days of the Contract Compliance Director's written approval of the removal of a purported MBE or WBE may result in the termination of the Contract or the imposition of such remedy authorized by the Ordinance, unless a written Petition for Reduction/Waiver is granted allowing the Contractor to award the work to a Person that is not certified as an MBE or WBE.

V. NON-COMPLIANCE

If the CCD determines that the Contractor has failed to comply with its contractual commitments or any portion of the Ordinance, the policies and procedures promulgated thereunder, or this GC-19, the Contract Compliance Director shall notify the Contractor of such determination and may take any and all appropriate actions as set forth in the Ordinance or the policies and procedures promulgated thereunder which includes but is not limited to disqualification, penalties, withholding of payments or other remedies in law or equity.

VI. REPORTING/RECORD-KEEPING REQUIREMENTS

The Contractor shall comply with the reporting and record-keeping requirements in the manner and time established by the Ordinance, the policies and procedure promulgated thereunder, and the Contract Compliance Director. Failure to comply with such reporting and record-keeping requirements may result in a declaration of Contract default. Upon award of a Contract, a Contractor shall acquire and utilize all Cook County reporting and record-keeping forms and methods which are made available by the Office of Contract Compliance. MBE and WBE firms shall be required to verify payments made by and received from the prime contractor.

GC-19 MINORITY AND WOMEN BUSINESS ENTERPRISES
COOK COUNTY ORDINANCE CHAPTER 34, DIVISION 8 SECTION 34-260 to SECTION 34-300 (con't.)

VII.= EQUAL EMPLOYMENT OPPORTUNITY

Compliance with MBE and WBE requirements will not diminish or supplant other legal Equal Employment Opportunity and Civil Rights requirements that relate to contractor and subcontractor obligations.

Any questions regarding this section should be directed to:

Contract Compliance Director
Cook County
161 North Clark Street Suite 2300
Chicago, Illinois 60601
(312) 603-5483

GC-20 MATERIAL DATA SAFETY SHEET

Where required under the Illinois "Toxic Substance Disclosure to Employees Act", Illinois Compiled Statutes, 820 ILCS 255/1, Contractor shall submit with each delivery of Contract goods, equipment or supplies a Material Data Safety Sheet.

GC-21 CONDUCT OF THE CONTRACTOR

The Contractor agrees to inform the County on a timely basis of all of the Contractor's interests, if any, which are or which the Contractor reasonably believes may be incompatible with any interest of the County. The Contractor shall take notice of and comply with the Cook County Lobbyist Registration Ordinance, Section 2-621 et al., Cook County Code. The Contractor shall not use for personal gain or make other improper use of privileged information which is acquired in connection with the Contract.

GC-22 ACCIDENT REPORTS

The Chief Procurement Officer and Director shall be given written notification within twenty-four (24) hours of any occurrence, on the site or otherwise, which pertains in any way to the performance of this Contract and involves the Contractor's personnel, or those of any of his subcontractors or others whether said occurrence be in the nature of bodily injury to employees or third parties or property damage.

The report shall include the name of person(s) injured, name of his employer, date, time and location of occurrence, extent of injury and/or damage, name(s) of eyewitnesses, and who treated the person(s) for injuries sustained, and such other information as may be relevant. The Contractor shall notify the local police of any occurrence requiring an official police record. The accident report should indicate whether the police were notified and, if so, the number of the police report.

GC-23 USE OF PREMISES

Contractor shall confer with the Director to ascertain full knowledge of all rules and regulations of the County facilities relative to this Contract and shall comply therewith. The Contractor shall confine the operations of its employees to the limits indicated by laws, ordinances, permits and/or direction of the Director and shall not encumber the premises with materials or debris. The Contractor shall not load or permit any part of the structure to be loaded with a weight that will endanger its structural integrity.

The County reserves the right to prohibit any person from entering any County facility for any reason. All subcontractors, agents and employees of the Contractor shall be accountable to the Director while on any County property and shall abide by all security regulations imposed by the County.

GC-24 GENERAL NOTICE

All notices required pursuant to this Contract shall be in writing and addressed to the parties at their respective addresses set forth below. All such notices shall be deemed duly given if hand delivered or if deposited in the United States mail, registered or certified, return receipt requested. Notice as provided herein does not waive service of summons or process.

TO THE COUNTY:

Chief Procurement Officer
County of Cook
161 North Clark Street, Suite 2300
Chicago, Illinois 60601
(Reference County Contract Number)

TO THE CONTRACTOR:

At address provided in the Economic Disclosure Statement or as otherwise indicated in writing to County.

GC-25 TERMINATION FOR CONVENIENCE

The County may terminate this Contract, or any portion, at any time by notice in writing from the County to the Contractor. Unless otherwise stated in the notice, the effective date of such termination shall be three business days after the date the notice of termination is mailed by the County. If the County elects to terminate the Contract in full, unless otherwise specified in the notice of termination, the Contractor shall immediately cease performance and shall promptly tender to the County all work products, reviews, recommendations, reports, documents and analyses, whether completed or in process. If the County elects to terminate the Contract in part, unless otherwise specified in the notice of partial termination, the Contractor shall immediately cease performance of those portions of the Contract which are terminated and shall promptly tender to the County all work products, reviews, recommendations, reports, documents and analyses relating to said portions of the Contract, whether completed or in process. Contractor shall refrain from incurring any further costs with respect to portions of the Contract which are terminated except as specifically approved by the Chief Procurement Officer. The Contractor shall not invoice the County for any goods, equipment, supplies or services provided after the effective date of termination.

GC-26 GUARANTEES AND WARRANTIES

Unless otherwise stated herein, all guarantees and warranties required shall be furnished by the Contractor and shall be delivered to the User Department before final payment on the Contract is issued. The Contractor agrees that the Contract goods, equipment, supplies or services to be furnished shall be covered by the most favorable commercial warranties the Contractor gives to any customer for the same or substantially similar Contract goods, equipment, supplies or services and that the rights and remedies so provided are in addition to and do not limit any rights afforded to County.

GC-27 STANDARD OF CONTRACT GOODS, EQUIPMENT OR SUPPLIES

Only new, originally manufactured Contract goods, equipment or supplies will be accepted by the County. The County will not accept any Contract goods, equipment or supplies that have been refurbished, rebuilt, restored or renovated in any manner. In addition, experimental materials will not be acceptable. Contract goods, equipment or supplies not produced by regular production methods and/or which have not been offered for sale to the public through accepted industry trade channels for a reasonable period of time prior to the offering of the proposal, will be considered experimental.

GC-28 CONFIDENTIALITY AND OWNERSHIP OF DOCUMENTS

Contractor acknowledges and agrees that information regarding this Contract is confidential and shall not be disclosed, directly, indirectly or by implication, or be used by Contractor in any way, whether during the term of this Contract or at any time thereafter, except solely as required in the course of Contractor's performance of the Contract. Contractor shall comply with the applicable privacy laws and regulations affecting the County and will not disclose any of County's records, materials, or other data to any third party. Contractor shall not have the right to compile and distribute statistical analyses and reports utilizing data derived from information or data obtained from County without the prior written approval of County. In the event such approval is given, any such reports published and distributed by Contractor shall be furnished to County without charge.

All documents, data, studies, reports, work product or product created as a result of the performance of this Contract shall be the property of the County of Cook. It shall be a breach of this Contract for the Contractor to reproduce or use, any documents, data, studies, report, work product or product obtained from the County of Cook or created hereby for its own purposes or to be copied and used by any third party. During the performance of the services herein provided for, the Contractor shall be responsible of any loss or damage to the County's documents while they are in the Contractor's possession, and any such document lost or damaged shall be restored at the expense of the Contractor.

GC-29 QUANTITIES

The quantities of materials required for the performance of the Contract are estimates for the purpose of determining an approximate total Contract amount and may not be the actual quantities required during the term of the Contract. The County reserves the right to increase or decrease the quantities at the Contract price, to correspond to the actual needs of the County. The County will be obligated to order and pay for only such quantities as are from time to time ordered, delivered, and accepted on purchase orders issued by the County.

GC-30 AUDIT; EXAMINATION OF RECORDS

The Contractor agrees that the Cook County Auditor or any of its duly authorized representatives shall, until expiration of three (3) years after the final payment under the Contract, have access and the right to examine any books, documents, papers, canceled checks, bank statements, purveyor's and other invoices, and records of the Contractor related to the Contract, or to Contractor's compliance with any term, condition or provision thereof. The Contractor shall be responsible for establishing and maintaining records sufficient to document the costs associated with performance under the terms of this Contract.

The Contractor further agrees that it shall include in all of its subcontracts hereunder a provision to the effect that the subcontractor agrees that the Cook County Auditor or any of its duly authorized representatives shall, until expiration of three (3) years after final payment under the subcontract, have access and the right to examine any books, documents, papers, canceled checks, bank statements, purveyor's and other invoices and records of such subcontractor involving transactions relating to the subcontract, or to such subcontractor's compliance with any term, condition or provision thereunder or under the Contract.

In the event the Contractor receives payment under the Contract, reimbursement for which is later disallowed by the County, the Contractor shall promptly refund the disallowed amount to the County on request, or at the County's option, the County may credit the amount disallowed from the next payment due or to become due to the Contractor under any contract with the County.

GC-31 GOVERNING LAW

This Contract shall be governed by and construed under the laws of the State of Illinois. The Contractor irrevocably agrees that, subject to the County's sole and absolute election, any action or proceeding in any way, manner or respect arising out of the Contract, or arising from any dispute or controversy in connection with or related to the Contract, shall be litigated only in courts within the Circuit Court of Cook County, State of Illinois, and the Contractor consents and submits to the jurisdiction thereof. In accordance with these provisions, Contractor waives any right it may have to transfer or change the venue of any litigation brought against it by the County pursuant to this Contract.

GC-32 COOPERATION WITH INSPECTOR GENERAL

Contractors, subcontractors, licensees, grantees or persons or businesses who have a County contract, grant, license, or certification of eligibility for County contracts shall abide by all of the applicable provisions of the Office of the Independent Inspector General Ordinance (Section 2-281 et. seq. of the Cook County Code of Ordinances). Failure to cooperate as required may result in monetary and/or other penalties.

GC-33 WAIVER

No term or provision of this Contract shall be deemed waived and no breach consented to unless such waiver or consent shall be in writing and signed by the party claimed to have waived or consented. The waiver of any such provision shall be strictly limited to the identified term or provision.

GC-34 ENTIRE CONTRACT

It is expressly agreed that the provisions set forth in this Contract constitute all the understandings and agreements between the parties. Any prior agreements, promises, negotiations, or representations not expressly set forth in this Contract are of no force and effect.

GC-35 FORCE MAJEURE

Neither Contractor nor County shall be liable for failing to fulfill any obligation under this Contract if such failure is caused by an event beyond such party's reasonable control and which is not caused by such party's fault or negligence. Such events shall be limited to acts of God, acts of war, fires, lightning, floods, epidemics, or riots.

GC-36 GOVERNMENTAL JOINT PURCHASING AGREEMENT

Pursuant to Section 4 of the Illinois Governmental Joint Purchasing Act (30 ILCS 525) and the Joint Purchase Agreement approved by the Cook County Board of Commissioners (April 9, 1965), other units of government may purchase goods, supplies, equipment or services under this Contract.
In the event that other agencies participate in a joint procurement, the County reserves the right to renegotiate the price to accommodate the larger volume.

GC-37 COMPARABLE GOVERNMENT PROCUREMENT

As permitted by the County of Cook, other government entities, if authorized by law, may wish to also purchase the goods, supplies, services or equipment under the same terms and conditions contained in this Contract (i.e., comparable government procurement). Each entity wishing to reference this Contract must have prior authorization from the County of Cook and the Contractor. If such participation is authorized, all purchase orders will be issued directly from and shipped directly to the entity requiring the goods, supplies, equipment or services. The County shall not be held responsible for any orders placed, deliveries made or payment for the goods, supplies, equipment or services ordered by these entities. Each entity reserves the right to determine the amount of goods, supplies, equipment or services it wishes to purchase under this Contract.

GC-38 FEDERAL CLAUSES

The following provisions apply to all Contracts which are funded in whole or in part with federal funds.
1. Interest of Members of or Delegates to the United States Congress
In accordance with 41 U.S.C. § 22, the Contractor agrees that it will not admit any member of or delegate to the United States Congress to any share or part of the Contract or any benefit derived therefrom.

The following provisions apply to all Contracts which are funded in whole or in part with federal funds.

1. Interest of Members of or Delegates to the United States Congress

   In accordance with 41 U.S.C. § 22, the Contractor agrees that it will not admit any member of or delegate to the United States Congress to any share or part of the Contract or any benefit derived therefrom.

2. False or Fraudulent Statements and Claims

   (a) The Contractor recognizes that the requirements of the Program Fraud Civil Remedies Act of 1986, as amended, 49 U.S.C. §§ 3081 et seq and U.S. DOT regulations, "Program Fraud Civil Remedies," 49 C.F.R. Part 31, apply to its actions pertaining to the Contract. Accordingly, by signing the Contract, the Contractor certifies or affirms the truthfulness and accuracy of any statement it has made, it makes, or it may make pertaining to the Contract, including without limitation any invoice for its services. In addition to other penalties that may be applicable, the Contractor also acknowledges that if it makes a false, fictitious, or fraudulent claim, statement, submission, or certification, the Federal Government reserves the right to impose the penalties of the Program Fraud Civil Remedies Act of 1986, as amended, on the Contractor to the extent the Federal Government deems appropriate.

   (b) The Contractor also acknowledges that if it makes a false, fictitious, or fraudulent claim, statement, submission, or certification to the County or Federal Government in connection with an urbanized

area formula project financed with Federal assistance authorized by 49 U.S.C. § 5307, the Government reserves the right to impose on the Contractor the penalties of 18 U.S.C. § 1001 and 49 U.S.C. § 5307(n)(1), to the extent the Federal Government deems appropriate.

3. Federal Interest in Patents

(a) General. If any invention, improvement, or discovery of the Contractor is conceived or first actually reduced to practice in the course of or under the Contract, and that invention, improvement, or discovery is patentable under the laws of the Unites States of America or any foreign country, the Contractor agrees to notify County immediately and provide a detailed report.

(b) Federal Rights. Unless the Federal Government later makes a contrary determination in writing, the rights and responsibilities of the County, Contractor, and the Federal Government pertaining to that invention, improvement, or discovery will be determined in accordance with applicable Federal laws and regulations, including any waiver thereof. Unless the Federal Government later makes a contrary determination in writing, the Contractor agrees that, irrespective of its status or the status of any subcontractor at any tier (e.g., a large business, small business, non-profit organization, institution of higher education, individual), the Contractor agrees it will transmit to the Federal Government those rights due the Federal Government in any invention resulting from the contract.

4. Federal Interest in Data and Copyrights

(a) Definition. The term "subject data" used in this section means recorded information, whether or not copyrighted, that is delivered or specified to be delivered under the Contract. Examples include, but are not limited, to: computer software, engineering drawings and associated lists, specifications, standards, process sheets, manuals, technical reports, catalog item identifications, and related information. The term "subject data" does not include financial reports, cost analyses, and similar information incidental to Contract administration.

(b) Federal Restrictions. The following restrictions apply to all subject data first produced in the performance of the Contract. Except as provided in the Contract and except for its own internal use, the Contractor may not publish or publicly reproduce subject data in whole or in part, or in any manner or form, nor may the Contractor authorize others to do so, without the written consent of the County and the Federal Government, until such time as the Federal Government may have either released or approved the release of such data to the public.

(c) Federal Rights in Data and Copyrights. In accordance with subparts 34 and 36 of the Common Rule, the County and the Federal Government reserve a royalty-free, non-exclusive and irrevocable license to reproduce, publish, or otherwise use, and to authorize others to use, for County or Federal Government purposes, the types of subject data described below. Without the copyright owner's consent, the County and Federal Government may not extend their license to other parties.

(1) Any subject data developed under the contract or subagreement financed by a federal Grant Agreement or Cooperative Agreement, whether or not a copyright has been obtained; and

(2) Any rights of copyright which the Contractor purchases ownership with Federal assistance.

(d) Special Federal Rights for Planning Research and Development Projects. When the Federal Government provides financial assistance for a planning, research, development, or demonstration project, its general intention is to increase public knowledge, rather than limit the benefits of the project to participants in the project. Therefore, unless the Federal Government determines otherwise, the Contractor on a planning, research, development, or demonstration project agrees that, in addition to the rights in data and copyrights set forth above, the County or Federal Government may make available to any third party either a license in the copyright to the subject data or a copy of the subject data. If the project is not completed for any reason whatsoever, all data

developed under the project will become subject data and will be delivered as the County or Federal Government may direct. This subsection, however, does not apply to adaptions of automatic data processing equipment or previously existing software programs for the County's use whose costs are financed with Federal transportation funds for capital projects.

(e) Hold Harmless. Unless prohibited by state law, upon request by the County or the Federal Government, the Contractor agrees to indemnify, save, and hold harmless the County and the Federal Government and their officers, agents, and employees acting within the scope of their official duties against any liability, including costs and expenses, resulting from any willful or intentional violation by the Contractor of proprietary rights, copyrights, or right of privacy, arising out of the publication, translation, reproduction, delivery, use, or disposition of any data furnished under the Contract. The Contractor will not be required to indemnify the County or Federal Government for any such liability arising out of the wrongful acts of employees or agents of the County or Federal Government.

(f) Restrictions on Access to Patent Rights. Nothing contained in this section on rights in data will imply a license to the County or Federal Government under any patent or be construed as affecting the scope of any license or other right otherwise granted to the County or Federal Government under any patent.

(g) Application on Materials Incorporated into Project. The requirements of Subsections 2, 3, and 4 of this Section do not apply to material furnished by the County and incorporated into the work.

5. Records and Audits

Contractor will deliver or cause to be delivered all documents (including but not limited to all Deliverables and supporting data, records, graphs, charts and notes) prepared by or for the County under the terms of this Agreement to the County promptly in accordance with the time limits prescribed in this Contract, and if no time limit is specified, then upon reasonable demand therefor or upon termination or completion of the Services hereunder. In the event of the failure by the Contractor to make such delivery, then and in that event, the Contractor will pay to County reasonable damages the County may sustain by reason thereof.

The County and the Federal Government will have the right to audit all payments made to the Contractor under this Agreement. Any payments to the Contractor which exceed the amount to which the Contractor is entitled under the terms of this Agreement will be subject to set-off.

The Contractor will keep and retain records relating to this Agreement and will make such records available to representatives of the County and the Federal Government, including without limitation the sponsoring federal agency, other participating agencies, and the Comptroller General of the United States, at reasonable times during the performance of this Agreement and for at least five years after termination of this Agreement for purposes of audit, inspection, copying, transcribing and abstracting.

No provision in this Agreement granting the County or the Federal Government a right of access to records is intended to impair, limit or affect any right of access to such records which the County or the Federal Government would have had in the absence of such provisions.

6. Environmental Requirements

The Contractor recognizes that many Federal and state laws imposing environmental and resource conservation requirements may apply to the Contract. Some, but not all, of the major Federal Laws that may affect the Contract include: the National Environmental Policy Act of 1969, as amended, 42 U.S.C. §§ 4321 et seq.; the Clean Air Act, as amended, 42 U.S.C. §§ 7401 et seq. and scattered sections of 29 U.S.C.; the Clean Water Act, as amended, scattered sections of 33 U.S.C. and 12 U.S.C.; the Resource Conservation and Recovery Act, as amended, 42 U.S.C. §§ 6901 et seq.; and the Comprehensive Environmental Response, Compensation, and Liability Act, as amended, 42 U.S.C. §§ 9601 et seq. The Contractor also

recognizes that U.S. EPA, U.S. DOT and other agencies of the Federal Government have issued and are expected in the future to issue regulations, guidelines, standards, orders, directives, or other requirements that may affect the Contract. Thus, the Contractor agrees to adhere to, and impose on its subcontractors, any such Federal requirements as the Federal Government may now or in the future promulgate. Listed below are requirements of particular concern.

The Contractor acknowledges that this list does not constitute the Contractor's entire obligation to meet all Federal environmental and resource conservation requirements. The Contractor will include these provisions in all subcontracts.

(a) Environmental Protection. The Contractor agrees to comply with the applicable requirements of the National Environmental Policy Act of 1969, as amended, 42 U.S.C. §§ 4321 et seq. in accordance with Executive Order No. 12898, "Federal Actions to Address Environmental Justice in Minority Populations and Low-Income Populations," 59 Fed. Reg. 7629, Feb. 16, 1994; U.S. DOT statutory requirements on environmental matters at 49 U.S.C. § 5324(b); Council on Environmental Quality regulations on compliance with the National Environmental Policy Act of 1969, as amended, 40 C.F.R. Part 1500 et seq.; and U.S. DOT regulations, "Environmental Impact and Related Procedures," 23 C.F.R. Part 771 and 49 C.F.R. Part 622.

(b) Air Quality. The Contractor agrees to comply with all applicable standards, orders, or regulations issued pursuant to the Clean Air Act, as amended, 42 U.S.C. §§ 7401 et seq. Specifically, the Contractor agrees to comply with applicable requirements of U.S. EPA regulations, "Conformity to State of Federal Implementation Plans of Transportation Plans, Programs, and Projects Developed, Funded or Approved Under Title 23 U.S.C. or the Federal Transit Act," 40 C.F.R. Part 51, Subpart T; and "Determining Conformity of Federal Actions to State or Federal Implementation Plans," 40 C.F.R. Part 93. The Contractor further agrees to report and require each subcontractor at any tier to report any violation of these requirements resulting from any Contract implementation activity to the County and the appropriate U.S. EPA Regional Office.

(c) Clean Water. The Contractor agrees to comply with all applicable standards, orders, or regulations issued pursuant to the Federal Water Pollution Control Act, as amended, 33 U.S.C. §§ 1251 et seq. The Contractor further agrees to report and require each subcontractor at any tier to report any violation of these requirements resulting from any Contract implementation activity to the County and the appropriate U.S. EPA Regional Office.

(d) List of Violating Facilities. The Contractor agrees that any facility to be used in the performance of the Contract or to benefit from the Contract will not be listed on the U.S. EPA List of Violating Facilities ("List"), and the Contractor will promptly notify the County if the Contractor receives any communication from the U.S. EPA that such a facility is under consideration for inclusion on the List.

(e) Preference for Recycled Products. To the extent practicable and economically feasible and to the extent that it does not reduce or impair the quality of the work, the Contractor agrees to use recycled products in performance of the Contract pursuant to U.S. Environment Protection Agency (U.S. EPA) guidelines at 40 C.F.R. Parts 247-253, which implement section 6002 of the Resource Conservation and Recovery Act, as amended, 42 U.S.C. § 6962.

7. No Exclusionary or Discriminatory Specifications

Apart from inconsistent requirements imposed by Federal statute or regulations, the Contractor agrees that it will comply with the requirements of 49 U.S.C. § 5323(h)(2) by refraining from using any Federal assistance to support subcontracts procured using exclusionary or discriminatory specifications.

8. Cargo Preference - Use of United States Flag Vessels

The Contractor agrees to comply with U.S. Maritime Administration regulations, "Cargo-Preference -- U.S. Flag Vessels," 49 C.F.R. Part 381, and to include the clauses required by those regulations, modified as necessary to identify the affected parties, in each subcontract or subagreement involving equipment, materials, or commodities suitable for transport by ocean vessel.

9. Fly America

Section 14.c of the Master Agreement states that if the contract or subcontracts may involve the international transportation of goods, equipment, or personnel by air, the contract must require Contractors and subcontractors at every tier to use U.S.-flag air carriers, to the extent service by these carriers is available. 49 U.S.C. 40118 and 4 C.F.R. Part 52.

10. No Federal Government Obligations to Third Parties

The Contractor agrees that, absent the Federal Government's express written consent, the Federal Government will not be subject to any obligations or liabilities to any contractor or any other person not a party to the Grant Agreement or Cooperative Agreement between the County and the Federal Government which is a source of funds for this Contract. Notwithstanding any concurrence provided by the Federal Government in or approval of any solicitation, agreement, or contract, the Federal Government continues to have no obligations or liabilities to any party, including the Contractor.

11. Allowable Costs

Notwithstanding any compensation provision to the contrary, the Contractor’s compensation under this Contract will be limited to those amounts which are allowable and allocable to the Contract in accordance

with OMB Circular A-87 and the regulations in 49 C.F.R. Part 18. To the extent that an audit reveals that the Contractor has received payment in excess of such amounts, the County may offset such excess payments against any future payments due to the Contractor and, if no future payments are due or if future payments are less than such excess, the Contractor will promptly refund the amount of the excess payments to the County.

12. Trade Restrictions

Contractor certifies that neither it nor any Subcontractor:

(a) is owned or controlled by one or more citizens of a foreign country included in the list of countries that discriminate against U.S. firms published by the Office of the United States Trade Representative (USTR);
(b) has knowingly entered into any contract or subcontract with a person that is a citizen or national of a foreign country on said list, nor is owned or controlled directly or indirectly by one or more citizens or nationals of a foreign country on said list;
(c) will procure, subcontract for, or recommend any product that is produced in a foreign country on said list.

Unless the restrictions of this clause are waived by the Secretary of Transportation in accordance with 49 CFR 30.17, no Notice-to-Proceed will be issued to an entity who is unable to certify to the above. If Contractor knowingly procures or subcontracts for the supply of any product or service of a foreign country on said list for use on the project, the USDOT may direct, through the County, cancellation of the Contract at no cost to the Government.

Further, Contractor agrees that it will incorporate this provision for certification without modification in each subcontract. Contractor may rely on the certification of a prospective Subcontractor unless it has knowledge that the certification is erroneous. Contractor will provide immediate written notice to the County if it learns that its certification or that of a Subcontractor was erroneous when submitted or has become erroneous by reason of changed circumstances. Each Subcontractor must agree to provide written notice to Contractor if

at any time it learns that its certification was erroneous by reason of changed circumstances. Nothing contained in the foregoing will be construed to require establishment of a system of records in order to render, in good faith, the certification required by this provision.

The knowledge and information of the Contractor is not required to exceed that which is normally possessed by a prudent person in the ordinary course of business dealings.

This certification concerns a matter within the jurisdiction of an agency of the United States of America and the making of a false, fictitious, or fraudulent certification may render the maker subject to prosecution under Title 18, United States Code, Section 100.

13. Contract Work Hours and Safety Standards Act

If applicable according to their terms, the Contractor agrees to comply and assures compliance with sections 102 and 107 of the Contract Work Hours and Safety Standards Act, as amended, 40 U.S.C. §§ 327 through 333, and implementing U.S. DOL regulations, “Labor Standards Provisions Applicable to Contracts Governing Federally Financed and Assisted Construction (also Labor Standards Provisions Applicable to Nonconstruction Contracts Subject to the Contract Work Hours and Safety Standards Act),” 29 C.F.R. Part 5; and U.S. DOL regulations, “Safety and Health Regulations for Construction,” 29 C.F.R. Part 1926. In addition to other requirements that may apply:

(a) In accordance with section of the Contract Work Hours and Safety Standards Act, as amended, 40 U.S.C. §§ 327 through 332, the Contractor agrees and assures that, for the Contract, the wages of every mechanic and laborer will be computed on the basis of a standard work week of 40 hours, and that each worker will be compensated for work exceeding the standard work week at a rate of not less than 1.5 times the basic rate of pay for all hours worked in excess of 40 hours in the work week. The Contractor agrees that determinations pertaining to these requirements will be made in accordance with applicable U.S. DOL regulations, “Labor Standards Provisions Applicable to Contracts Governing Federally Financed and Assisted Construction (also Labor Standards Provisions Applicable to Nonconstruction Contracts Subject to the Contract Work Hours and Safety Standards Act),” 29 C.F.R. Part 5.

(b) In accordance with section 107 of the Contract Work Hours and Safety Standards Act, as amended, 40 U.S.C. § 333, the contractor agrees and assures that no laborer or mechanic working on a construction contract will be required to work in surroundings or under working conditions that are unsanitary, hazardous, or dangerous to his or her health and safety, as determined in accordance with U.S. DOL regulations, “Safety and Health Regulations for Construction,” 29 C.F.R. Part 1926.

14. Veteran’s Preference

In the employment of labor (except in executive, administrative, and supervisory positions), preference will be given to Vietnam-era veterans and disabled veterans. However, this preference may be given only where individuals are available and qualified to perform the work to which employment relates.

15. Copyright Ownership

Consultant and the County intend that, to the extent permitted by law, the Deliverables to be produced by Consultant at the County's instance and expense pursuant to this Agreement are conclusively deemed "works made for hire" within the meaning and purview of Section 101 of the United States Copyright Act, 17 U.S.C. §101 et seq. (the “Copyright Act”), and that the County will be the copyright owner of the Deliverables and of all aspects, elements and components of them in which copyright can subsist.

To the extent that any Deliverable does not qualify as a "work made for hire," Consultant irrevocably grants, conveys, bargains, sells, assigns, transfers and delivers to the County, its successors and assigns, all right, title and interest in and to the copyrights and all U.S. and foreign copyright registrations, copyright applications and copyright renewals for them, and other intangible, intellectual property embodied in or pertaining to the Deliverables prepared for the County under this Agreement, free and clear of any liens, claims or other

encumbrances, to the fullest extent permitted by law. Consultant will execute all documents and perform all acts that the County may reasonably request in order to assist the County in perfecting its rights in and to the copyrights relating to the Deliverables, at the sole expense of the County.

Consultant warrants to County, its successors and assigns, that on the date of transfer Consultant is the lawful owner of good and marketable title in and to the copyrights for the Deliverables and has the legal rights to fully assign them. Consultant further warrants that it has not assigned any copyrights nor granted any licenses, exclusive or nonexclusive, to any other party, and that it is not a party to any other agreements or subject to any other restrictions with respect to the Deliverables. Consultant warrants and represents that the Deliverables are complete and comprehensive, and the Deliverables are a work of original authorship.

16. Accessibility Compliance

If this Agreement involves design for construction, the Consultant warrants that all design documents produced or utilized under this Agreement and all construction or alterations undertaken under this Agreement will comply with all federal, state and local laws and regulations regarding accessibility standards for persons with disabilities or environmentally limited persons including, but not limited to, the following: the Americans with Disabilities Act of 1990, 42 U.S.C. § 12101 et seq. and the Americans with Disabilities Act Accessibility Guidelines for Buildings and Facilities ("ADAAG"); the Architectural Barriers Act, Pub. L. 90-480 (1968), and the Uniform Federal Accessibility Standards ("UFAS"); and the Illinois Environmental Barriers Act, 410 ILCS 25/1 et seq., and all regulations promulgated thereunder , see Illinois Administrative Code, Title 71, Chapter 1, Section 400.110. If the above standards are inconsistent, the Consultant must comply with the standard providing the greatest accessibility. Also, the Consultant must, prior to construction,

review the plans and specifications to insure compliance with the above referenced standards. If the Consultant fails to comply with the foregoing standards, the Consultant must perform again, at no expense, all services required to be re-performed as a direct or indirect result of such failure.

17. Visual Rights Act Waiver

The Consultant/Contractor waives any and all rights that may be granted or conferred under Section 106A and Section 113 of the United States Copyright Act, (17 U.S.C. § 101 et seq.) (the "Copyright Act") in any work of visual art that may be provided pursuant to this Agreement. Also, the Consultant/Contractor represents and warrants that the Consultant/Contractor has obtained a waiver of Section 106A and Section 113 of the Copyright Act as necessary from any employees and subcontractors, if any.

18. Equal Employment Opportunity

During the performance of this contract, the contractor agrees as follows:

(1) The contractor will not discriminate against any employee or applicant for employment because of race, color, religion, sex, sexual orientation, gender identity, or national origin. The contractor will take affirmative action to ensure that applicants are employed, and that employees are treated during employment without regard to their race, color, religion, sex, sexual orientation, gender identity, or national origin. Such action shall include, but not be limited to the following:

Employment, upgrading, demotion, or transfer; recruitment or recruitment advertising; layoff or termination; rates of pay or other forms of compensation; and selection for training, including apprenticeship. The contractor agrees to post in conspicuous places, available to employees and applicants for employment, notices to be provided setting forth the provisions of this nondiscrimination clause.

(2) The contractor will, in all solicitations or advertisements for employees placed by or on behalf of the contractor, state that all qualified applicants will receive consideration for employment without regard to race, color, religion, sex, sexual orientation, gender identity, or national origin.

(3) The contractor will not discharge or in any other manner discriminate against any employee or applicant for employment because such employee or applicant has inquired about, discussed, or disclosed the compensation of the employee or applicant or another employee or applicant. This provision shall not apply to instances in which an employee who has access to the compensation information of other employees or applicants as a part of such employee's essential job functions discloses the compensation of such other employees or applicants to individuals who do not otherwise have access to such information, unless such disclosure is in response to a formal complaint or charge, in furtherance of an investigation, proceeding, hearing, or action, including an investigation conducted by the employer, or is consistent with the contractor's legal duty to furnish information.

(4) The contractor will send to each labor union or representative of workers with which he has a collective bargaining agreement or other contract or understanding, a notice to be provided advising the said labor union or workers' representatives of the contractor's commitments under this section, and shall post copies of the notice in conspicuous places available to employees and applicants for employment.

(5) The contractor will comply with all provisions of Executive Order 11246 of September 24, 1965, and of the rules, regulations, and relevant orders of the Secretary of Labor.

(6) The contractor will furnish all information and reports required by Executive Order 11246 of September 24, 1965, and by rules, regulations, and orders of the Secretary of Labor, or pursuant thereto, and will permit access to his books, records, and accounts by the administering agency and the Secretary of Labor for purposes of investigation to ascertain compliance with such rules, regulations, and orders.

(7) In the event of the contractor's noncompliance with the nondiscrimination clauses of this contract or with any of the said rules, regulations, or orders, this contract may be canceled, terminated, or suspended in whole or in part and the contractor may be declared ineligible for further Government contracts or federally assisted construction contracts in accordance with procedures authorized in Executive Order 11246 of September 24,

1965, and such other sanctions may be imposed and remedies invoked as provided in Executive Order 11246 of September 24, 1965, or by rule, regulation, or order of the Secretary of Labor, or as otherwise provided by law.

(8) The contractor will include the portion of the sentence immediately preceding paragraph (1) and the provisions of paragraphs (1) through (8) in every subcontract or purchase order unless exempted by rules, regulations, or orders of the Secretary of Labor issued pursuant to section 204 of Executive Order 11246 of September 24, 1965, so that such provisions will be binding upon each subcontractor or vendor. The contractor will take such action with respect to any subcontract or purchase order as the administering agency may direct as a means of enforcing such provisions, including sanctions for noncompliance:

Provided, however, that in the event a contractor becomes involved in, or is threatened with, litigation with a subcontractor or vendor as a result of such direction by the administering agency, the contractor may request the United States to enter into such litigation to protect the interests of the United States.

The applicant further agrees that it will be bound by the above equal opportunity clause with respect to its own employment practices when it participates in federally assisted construction work: Provided, That if the applicant so participating is a State or local government, the above equal opportunity clause is not applicable to any agency, instrumentality or subdivision of such government which does not participate in work on or under the contract.

The applicant agrees that it will assist and cooperate actively with the administering agency and the Secretary of Labor in obtaining the compliance of contractors and subcontractors with the equal opportunity clause and the rules, regulations, and relevant orders of the Secretary of Labor, that it will furnish the administering agency and the Secretary of Labor such information as they may require for the supervision of such compliance, and that it will otherwise assist the administering agency in the discharge of the agency's primary responsibility for securing compliance.

The applicant further agrees that it will refrain from entering into any contract or contract modification subject to Executive Order 11246 of September 24, 1965, with a contractor debarred from, or who has not demonstrated eligibility for, Government contracts and federally assisted construction contracts pursuant to the Executive Order and will carry out such sanctions and penalties for violation of the equal opportunity clause as may be imposed upon contractors and subcontractors by the administering agency or the Secretary of Labor pursuant to Part II, Subpart D of the Executive Order. In addition, the applicant agrees that if it fails or refuses to comply with these undertakings, the administering agency may take any or all of the following actions: Cancel, terminate, or suspend in whole or in part this grant (contract, loan, insurance, guarantee); refrain from extending any further assistance to the applicant under the program with respect to which the failure or refund occurred until satisfactory assurance of future compliance has been received from such applicant; and refer the case to the Department of Justice for appropriate legal proceedings.

19. Copeland "Anti-Kickback" Act (40 U.S.C. 3145))

All contracts and subgrants in excess of $2000 for construction or repair awarded by recipients and subrecipients shall include a provision for compliance with the Copeland "Anti-Kickback" Act (40 U.S.C. 3145), as supplemented by Department of Labor regulations (29 CFR part 3, "Contractors and Subcontractors on Public Building or Public Work Financed in Whole or in Part by Loans or Grants from the United States"). The Act provides that each contractor or subrecipient shall be prohibited from inducing, by any means, any person employed in the construction, completion, or repair of public work, to give up any part of the compensation to which he is otherwise entitled. The recipient shall report all suspected or reported violations to the Federal awarding agency.

20. Davis-Bacon Act, as amended ((40 U.S.C. 3141-3148)

When required by Federal program legislation, all construction contracts awarded by the recipients and subrecipients of more than $2000 shall include a provision for compliance with the Davis-Bacon Act ((40 U.S.C. 3141-3148) and as supplemented by Department of Labor regulations (29 CFR part 5, "Labor Standards Provisions Applicable to Contracts Governing Federally Financed and Assisted Construction").

Under this Act, contractors shall be required to pay wages to laborers and mechanics at a rate not less than the minimum wages specified in a wage determination made by the Secretary of Labor. In addition, contractors shall be required to pay wages not less than once a week. The recipient shall place a copy of the current prevailing wage determination issued by the Department of Labor in each solicitation and the award of a contract shall be conditioned upon the acceptance of the wage determination. The recipient shall report all suspected or reported violations to the Federal awarding agency.

21. Contract Work Hours and Safety Standards Act (40 U.S.C. 3701-3708)

Where applicable, all contracts awarded by recipients in excess of $100,000 that involve the employment of mechanics or laborers shall include a provision for compliance with 40 U.S.C. 3702 and 3704, as supplemented by Department of Labor regulations (29 CFR part 5). Under 40 U.S.C. 3702 of the Act, each contractor shall be required to compute the wages of every mechanic and laborer on the basis of a standard work week of 40 hours. Work in excess of the standard work week is permissible provided that the worker is compensated at a rate of not less than 1 ½ times the basic rate of pay for all hours worked in excess of 40 hours in the work week. The requirements of 40 U.S.C. 3704 are applicable to construction work and provides that no laborer or mechanic shall be required to work in surroundings or under working conditions which are unsanitary, hazardous or dangerous. These requirements do not apply to the purchases of supplies or materials or articles ordinarily available on the open market, or contracts for transportation or transmission of intelligence.

22. Rights to Inventions Made Under a Contract or Agreement

Contracts or agreements for the performance of experimental, developmental, or research work shall provide for the rights of the Federal Government and the recipient in any resulting invention in accordance with 37

CFR part 401, "Rights to Inventions Made by Nonprofit Organizations and Small Business Firms Under Government Grants, Contracts and Cooperative Agreements," and any implementing regulations issued by the awarding agency.

23. Clean Air Act (42 U.S.C. 7401 et seq.) and the Federal Water Pollution Control Act (33 U.S.C. 1251 et seq.), as amended

Contracts and subgrants of amounts in excess of $150,000 shall contain a provision that requires the recipient to agree to comply with all applicable standards, orders or regulations issued pursuant to the Clean Air Act (42 U.S.C. 7401 et seq.) and the Federal Water Pollution Control Act as amended (33 U.S.C. 1251 et seq.). Violations shall be reported to the Federal awarding agency and the Regional Office of the Environmental Protection Agency (EPA).

24. Byrd Anti-Lobbying Amendment (31 U.S.C. 1352)

Contractors who apply or bid for an award of $100,000 or more shall file the required certification. Each tier certifies to the tier above that it will not and has not used Federal appropriated funds to pay any person or organization for influencing or attempting to influence an officer or employee of any agency, a member of Congress, officer or employee of Congress, or an employee of a member of Congress in connection with obtaining any Federal contract, grant or any other award covered by 31 U.S.C. 1352. Each tier shall also disclose any lobbying with non-Federal funds that takes place in connection with obtaining any Federal award. Such disclosures are forwarded from tier to tier up to the recipient.

25. Debarment and Suspension (E.O.s 12549 and 12689)

No contract shall be made to parties listed on the General Services Administration's List of Parties Excluded from Federal Procurement or Nonprocurement Programs in accordance with E.O.s 12549 and 12689, "Debarment and Suspension." This list contains the names of parties debarred, suspended, or otherwise excluded by agencies, and contractors declared ineligible under statutory or regulatory authority other than E.O. 12549. Contractors with awards that exceed the small purchase threshold shall provide the required certification regarding its exclusion status and that of its principal employees.

26. Prohibition on Certain Telecommunications and Surveillance Equipment

Recipients and subrecipients are prohibited from using loan or grant funds to procure or obtain; extend or renew a contract to procure or obtain; or enter into a contract (or extend or renew a contract) to procure or obtain equipment, services, or systems that uses covered telecommunications equipment or services as a substantial or essential component of any system, or as critical technology as part of any system. As described in Public Law 115-232, section 889, covered telecommunications equipment is telecommunications equipment produced by Huawei Technologies Company or ZTE Corporation (or any subsidiary or affiliate of such entities), Hytera Communications Corporation, Hangzhou Hikvision Digital Technology Company, or Dahua Technology Company (or any subsidiary or affiliate of such entities), or by an entity that the Secretary of Defense, in consultation with the Director of the National Intelligence or the Director of the Federal Bureau of Investigation, reasonably believes to be an entity owned or controlled by, or otherwise connected to, the government of a covered foreign country.

GC-39 CONTRACT INTERPRETATION

In the event there is a conflict between or among any of the documents specified in Section V Incorporation of Exhibits, the terms of the General Conditions shall control. This Contract shall be interpreted and construed based upon the following Order of Precedence. Such order of precedence shall govern to resolve all cases of conflict, ambiguity or inconsistency between Exhibits:

EXHIBIT I	SPECIFICATION
EXHIBIT II	SCHEDULE OF COMPENSATION
EXHIBIT III	BOARD APPROVAL LETTER
EXHIBIT IV	IDENTIFICATION OF SUBCONTRACTOR/SUPPLIER/SUBCONSULTANT
EXHIBIT V	MINORITY AND WOMEN OWNED BUSINESS ENTERPRISE COMMITMENT
EXHIBIT VI	EVIDENCE OF INSURANCE
EXHIBIT VII	ELECTRONIC PAYABLES PROGRAM (“E-PAYABLES”)
EXHIBITVIII	ECONOMIC DISCLOSURE STATEMENT (“EDS”)

END OF SECTION

EXHIBIT I

SPECIFICATIONS

SPECIFICATIONS

Cook County wishes to purchase the following items from Group A and Group G of the City of Chicago Contract #201170. The Contractor warrants that the items provided shall meet the following specifications.

Meridian Barriers

GROUP A
PORTABLE, UNANCHORED, BALLISTIC-RATED VEHICLE BARRIERS:

These barriers must have a arch shaped configuration and be deployable on roadways and hard surfaces.
These barriers can be fixed in place as a primary security system for entry points, roadways, and perimeters.
The barrier must be able to be deployed by one person in under 10 minutes.
The barriers shall require no maintenance, electricity, hydraulics, or batteries for operation.
Barriers must be capable of full ballistic protection for any armor piecing 50 caliber rounds.

Barrier must include lifetime guarantee and as such replacement of the barrier or maintenance on the barrier will be at no cost to the County.

Design Basis Threat (DBT) vehicle, other vehicle weights and speeds:

- Modular design with flexible configuration for lane closures, lane mergers, long perimeter protection when connected to Arrestor Cables
- Unit weight over 600lbs
- Crash tested and Crash-certified of K4 = 15,000# Truck at 30mph (450,000 ft-lbs. of kinetic energy), US Department of State
- Structural steel ASTM A36 plates
- Bolts conform to the ASTM specifications for A325 or A490 high strength bolts
- All welding is AWS certified
- Fabricated of high strength steel made in the United States
- Connected into sets of two or more barrier
- Heavy duty back plates dig into force barrier into vehicles
- Ballistic-rated front plate and back gusset
- Ramped front plate levers into vehicle undercarriage
- Measurements of 2' (60 cm) wide, 4' (120 cm) long, 3’ (90 cm) high (per unit)
- Jagged front and back edges with spikes on horizontal plate for gripping on or before impact
- Wide rear kick plate 10” (25.4 cm) long to reinforce stopping of the vehicle on impact
- Fixed in place ramp at 13 degrees with vertical plate positioned on the horizontal plate
- Attachment points for either 3’ (90 cm) arrestor cables or 8’ (243 cm) arrestor cables
- Unanchored stopping power

• Units may be anchored by using a bolted method row of 4 to stop vehicles traveling at 40 MPH (64 KPH) within 7' (213 cm of impact Crash Rated: K4 = 15,000# Truck at 30mph (450,000 ft-lbs. of kinetic energy. Barriers test standards conducted by ASTM F2656-15 (previously ASTM F2656-07), PAS 68, and IWA 14-1 test.
• Un-bolted unites stop a vehicle traveling at 30 MPH (48 KPH) within 14' (426 cm)
Deployment Mechanisms:
• Non-electronic, non-hydraulic design
• Reusable after impact
• Tow bar is 5'4" (162 cm) long with a 20" (50 cm) square handle with a locking pin used in the receiving cradle combined with connecting the leverage chain onto the receiving mount at the base of the ramp
• Removable wheels for stationary position or locked in the up position once set in place
• One person portable and rapidly deployable within minutes
• No heavy equipment needed to deploy
• Easy transportation in sets of 4, 6, 8, 12 and 16 units where a hauler and tow bar can transport by standard pickup truck or trailer
• Fast setup, unit pivots on wheels with hauler or tow bar connectors
Operations and Maintenance (O&M) Requirements:
• Lifetime warranty on unit and parts
• No maintenance contracts required
Environmental Condition at Barrier:
• Utilized for primary security check points, roadways, and hard surfaces.
• Functional in all weather conditions.
• May be galvanized or painted
• Suitable for on aggregate roadways and hard surfaces
• After impact barrier gaps: Barrier is guaranteed not to break and should be reusable after impact.

Group G
Purchase of Mobile Barrier Trailers

• Trailers or equipment furnished will be the manufacturer's latest models

Any accessories not herein mentioned but necessary to furnish a complete unit ready for use upon delivery will be included.

Delivery for Group G
Pre-Delivery, Servicing and Adjustments

Prior to delivery of any trailers, the Contractor will perform any/all preparatory operations recommended by the manufacturer, including (where applicable):

- Testing the operation of all accessories;
- Testing electrical, hydraulic and air systems;
- Charging batteries;
- Inflating tires to recommended pressures;
- Lubricating all grease fittings and friction points;

Equipment, Component and Dimensional Data
The Contractor shall provide the County a detailed list of information related to the specified trailers, the component parts and mounted equipment, no later than fifteen (15) calendar days prior to scheduled delivery date.

Any and all costs involved in providing the requested information must be anticipated by the Contractor and incorporated into the pricing. The Contractor will not be entitled to any additional compensation from the County as a result of this provision.

Delivery dates and times must be coordinated with Jeff Schulman 312 343-1060 or his designee no later than five days prior to delivery. The Contractor must deliver the specified trailers, complete with all attachments and ready for use. Delivery must be made between the hours of 8:00 a.m. and 2:30 p.m., Monday through Friday, excluding Holidays. Trailers must be delivered F.O.B. Destination (Cook County), IL at the following address:

Cook County Emergency Management & Regional Security
15900 S. Cicero Ave.
Building 21
Oak Forest, Il. 60452

Delivery of the specified trailers must be completed within 90 Calendar Days following the issue date of purchase order release.

The above noted Contact Person must be notified at least 48 hours prior to delivery of the specified Trailers.

Vehicle and Equipment Additional Requirements (Group G)

General Construction
The trailers or equipment furnished will be the manufacturers latest models of the trailers or equipment required in the specifications included in this document. Any accessories not herein mentioned but necessary to furnish a complete unit ready for use upon delivery will be included. The Trailers or equipment will conform to the best practices known to the trade in strength, quality of material and workmanship and be subject to this specification in full. The specification will be construed as minimum; should the manufacturer's current published data or standard package exceed this; it will be considered minimum and will be furnished. The County reserves the right to waive or make exceptions to this requirement if it be to the County's best interest.

Standard Product
Experimental trailers will not be acceptable. The Chief Procurement Officer reserves the right to determine what constitutes experimental equipment.

EXHIBIT II

SCHEDULE OF COMPENSATION

CONTRACT NO. 2406-07250
Portable Vehicle Impact Devices

Meriian Item #	Description	Qty	Unit Price	Amount
MRDG-T1000	Archer T-1000 Drop DeckTrailer	4	$ 34,247.85	$ 136,991.40
AB1200	Aracher 1200 Barrier	32	$ 6,513.75	$ 208,440.00
AMHA003-2	Archer Manual Hauler 2.0	4	$ 1,925.18	$ 7,700.72
AFTB001	Archer Field Tow Bar	8	$ 574.00	$ 4,592.00
AACN4f022	4' Arrestor Cable 2.0	28	$ 574.18	$ 16,077.04
MRDG-RGATEKIT	Archer Rapid Gate Kit	4	$ 12,540.18	$ 50,160.72
MCTR002	Certified Training	1	$ 1,442.69	$ 1,442.69
F	Freight	1	$ 16,990.00	$ 16,990.00
				$ 442,394.57

EXHIBIT III
BOARD APPROVAL LETTER

Board of Commissioners of Cook County

Legislation Details

File #:	25-0004	**Version:** 1	**Name:**	Meridian Rapid Defense Group, LLC, Pasadena, CA
Type:	Contract		**Status:**	Approved
File created:	9/25/2024		**In control:**	Board of Commissioners
On agenda:	12/19/2024		**Final action:**	12/19/2024
Title:	PROPOSED CONTRACT			

Department(s): Emergency Management & Regional Security

Vendor: Meridian Rapid Defense Group LLC, Pasadena, California

Request: Authorization for the Chief Procurement Officer to enter into and execute

Good(s) or Service(s): Portable Vehicle Impact Devices - Meridian barriers and trailers

Contract Value: $442,394.57

Contract period: 1/1/2025-11/30/2025 with one (1), 10-month renewal option

Potential Fiscal Year Budget Impact: FY 2025 $442,394.57

Accounts: 11900.1265.53967.560156; 11900.1265.54214.560156

Contract Number(s): 2406-07250

Concurrences:
The contract-specific goal set on this contract was zero.

The Chief Procurement Officer concurs.

Summary: The Department of Emergency Management & Regional Security requests authorization for the Chief Procurement Officer to enter into and execute a contract with Meridian Rapid Defense Group LLC for Portable Vehicle Impact Devices. Meridian barriers would be used by the Department of Emergency Management & Regional Security (EMRS) and its public safety stakeholders to mitigate potential and growing threats to public safety; specifically, acts of terrorism and/or targeted violence against residents and visitors attending large-scale public events, or to temporarily enhance physical protective measures to protect Critical Infrastructure and Key Resources (CIKR) located within Cook County. These anti-vehicle barriers, which can be rapidly deployed using purpose-built, drop-deck trailers, which are included in this project request, would support EMRS' public safety stakeholders by providing a primary or backup security system for entry points, roadways, and perimeters to mitigate vehicle-borne threats to the public.

This is a Comparable Government Procurement pursuant to Section 34-140 of the Cook County Procurement Code. Meridian Rapid Defense Group LLC was previously awarded a contract by the City of Chicago through an Invitation to Bid (IFB). Cook County wishes to leverage this procurement effort.

Sponsors:

Indexes: THEODORE "TED" BERGER, Executive Director, Department of Emergency Management and Regional Security

Code sections:

Attachments:

Date	Ver.	Action By	Action	Result
12/19/2024	1	Board of Commissioners	approve	Pass

powered by Legistar™

EXHIBIT IV

IDENTIFICATION OF SUBCONTRACTOR/SUPPLIER/SUBCONSULTANT

Contract #: 2406-07250

OCPO ONLY:	
[ ]	Disqualification
[X]	Check Complete

Cook County
Office of the Chief Procurement Officer
Identification of Subcontractor/Supplier/Subconsultant Form

The Bidder/Proposer/Respondent ("the Contractor") will fully complete and execute and submit an Identification of Subcontractor/Supplier/Subconsultant Form ("ISF") with each Bid, Request for Proposal, and Request for Qualification. **The Contractor must complete the ISF for each Subcontractor, Supplier or Subconsultant which shall be used on the Contract**. In the event that there are any changes in the utilization of Subcontractors, Suppliers or Subconsultants, the Contractor must file an updated ISF.

Bid/RFP/RFQ No.: 2406-07250	Date: 11/21/2024
Total Bid or Proposal Amount: $442,394.57	Contract Title: Portable Vehicle Impact Devices
Contractor: Meridian Rapid Defense Group LLC	Subcontractor/Supplier/ Subconsultant to be added or substitute: NONE
Authorized Contact for Contractor: Kelly Sullivan	Authorized Contact for Subcontractor/Supplier/ Subconsultant: Not Applicable
Email Address (Contractor): ksullivan@meridian-barrier.com	Email Address (Subcontractor): N/A
Company Address (Contractor): 222 N. Pacific Coast Hwy, Floor 10	Company Address (Subcontractor): N/A
City, State and Zip (Contractor): El Segundo, CA 90245	City, State and Zip (Subcontractor): N/A
Telephone and Fax (Contractor): Phone (626) 319-1479	Telephone and Fax (Subcontractor): N/A
Estimated Start and Completion Dates (Contractor): 1/1/2025 - 11/30/2025	Estimated Start and Completion Dates (Subcontractor): N/A

Note: Upon request, a copy of all written subcontractor agreements must be provided to the OCPO.

Description of Services or Supplies	**Total Price of Subcontract for Services or Supplies**
Portable Vehicle Impact Devices	N/A

The subcontract documents will incorporate all requirements of the Contract awarded to the Contractor as applicable. The subcontract will in no way hinder the Subcontractor/Supplier/Subconsultant from maintaining its progress on any other contract on which it is either a Subcontractor/Supplier/Subconsultant or principal contractor. This disclosure is made with the understanding that the Contractor is not under any circumstances relieved of its abilities and obligations, and is responsible for the organization, performance, and quality of work. **This form does not approve any proposed changes, revisions or modifications to the contract approved MBE/WBE Utilization Plan. Any changes to the contract's approved MBE/WBE/Utilization Plan must be submitted to the Office of the Contract Compliance.**

Meridian Rapid Defense Group LLC
Contractor

Kelly Sullivan
Name

Corporate Compliance and Governance Administrator
Title

Kelly Sullivan
Prime Contractor Signature

11/21/2024
Date

EXHIBIT V

MINORITY AND WOMEN BUSINESS ENTERPRISE

COOK COUNTY
OFFICE OF THE
Chief Procurement
Officer

161 N. Clark
Suite 2300
Chicago, Illinois 60601

Date: December 10, 2024

TO: Raffi Sarrafian, Chief Procurement Officer
Office of the Chief Procurement Officer

FROM: JEANETTA CARDINE
Jeanetta Cardine, Deputy Director
Compliance Center of Excellence
Center of Business Enterprise Development

RE: Contract No. 2406-07250
Portable Vehicle Impact Devices
Emergency Management and Regional Services
Reference Contract: Goods and Services
Contractor: Meridian Rapid Defense Group, LLC
Contract Value: $442,394.57
Contract Term: 1/1/2025 – 11/30/2025 and one (1) ten (10) month renewal option
Participation Goal: 0% DBE

The Center of Business Enterprise Development is in receipt of the above-referenced contract for goods and services and has determined a 0% DBE participation goal was recommended and does not require the Center of Business Enterprise Development to review for DBE compliance with the Minority- and Women- owned Business Enterprises (MBE/WBE) Ordinance.

JC/db/mk

CC: Hermine Wise, (Procurement Office)
Ellen O'Connor, (Emergency Management)

MBE/WBE UTILIZATION PLAN - FORM 1

BIDDER/PROPOSER HEREBY STATES that all MBE/WBE firms included in this Plan are certified MBEs/WBEs by at least one of the entities listed in the General Conditions – Section 19.

I. **BIDDER/PROPOSER MBE/WBE STATUS:** (check the appropriate line) N/A

☐ Bidder/Proposer is a certified MBE or WBE firm. (If so, attach copy of current Letter of Certification)

☐ Bidder/Proposer is a Joint Venture and one or more Joint Venture partners are certified MBEs or WBEs. (If so, attach copies of Letter(s) of Certification, a copy of Joint Venture Agreement clearly describing the role of the MBE/WBE firm(s) and its ownership interest in the Joint Venture and a completed Joint Venture Affidavit – available online at www.cookcountyil.gov/contractcompliance)

☐ Bidder/Proposer is not a certified MBE or WBE firm, nor a Joint Venture with MBE/WBE partners, but will utilize MBE and WBE firms either directly or indirectly in the performance of the Contract. (If so, complete Sections II below and the Letter(s) of Intent – Form 2).

II. ☐ **Direct Participation of MBE/WBE Firms** ☐ **Indirect Participation of MBE/WBE Firms**

NOTE: Where goals have not been achieved through direct participation, Bidder/Proposer shall include documentation outlining efforts to achieve Direct Participation at the time of Bid/Proposal submission. Indirect Participation will only be considered after all efforts to achieve Direct Participation have been exhausted. Only after written documentation of Good Faith Efforts is received will Indirect Participation be considered.

MBEs/WBEs that will perform as subcontractors/suppliers/consultants include the following:

MBE/WBE Firm: _____

Address: _____

E-mail: _____

Contact Person: _____ Phone: _____

Dollar Amount Participation: $_____

Percent Amount of Participation: _____%

*Letter of Intent attached? Yes _____ No _____
*Current Letter of Certification attached? Yes _____ No _____

MBE/WBE Firm: _____

Address: _____

E-mail: _____

Contact Person: _____ Phone: _____

Dollar Amount Participation: $_____

Percent Amount of Participation: _____%

*Letter of Intent attached? Yes _____ No _____
*Current Letter of Certification attached? Yes _____ No _____

Attach additional sheets as needed.

*** Letter(s) of Intent and current Letters of Certification must be submitted at the time of bid.**

MBE/WBE LETTER OF INTENT - FORM 2

N/A

M/WBE Firm: _____ Certifying Agency: _____

Contact Person: _____ Certification Expiration Date: _____

Address: _____ Ethnicity: _____

City/State: _____ Zip: _____ Bid/Proposal/Contract #: _____

Phone: _____ Fax: _____ FEIN #: _____

Email: _____

Participation: ☐ Direct ☐ Indirect

Will the M/WBE firm be subcontracting any of the goods or services of this contract to another firm?

☐ No ☐ Yes – Please attach explanation. Proposed Subcontractor(s): _____

The undersigned M/WBE is prepared to provide the following Commodities/Services for the above named Project/ Contract: *(If more space is needed to fully describe M/WBE Firm's proposed scope of work and/or payment schedule, attach additional sheets)*

_____

_____

_____

_____

Indicate the **Dollar Amount**, **Percentage**, and the **Terms of Payment** for the above-described Commodities/ Services:

_____

_____

THE UNDERSIGNED PARTIES AGREE that this Letter of Intent will become a binding Subcontract Agreement for the above work, conditioned upon (1) the Bidder/Proposer's receipt of a signed contract from the County of Cook; (2) Undersigned Subcontractor remaining compliant with all relevant credentials, codes, ordinances and statutes required by Contractor, Cook County, and the State to participate as a MBE/WBE firm for the above work. The Undersigned Parties do also certify that they did not affix their signatures to this document until all areas under Description of Service/ Supply and Fee/Cost were completed.

_____
Signature (*M/WBE*)

_____
Print Name

_____
Firm Name

_____
Date

Subscribed and sworn before me

this ____ day of_____, 20____.

Notary Public _____

SEAL

_____
Signature (*Prime Bidder/Proposer*)

_____
Print Name

_____
Firm Name

_____
Date

Subscribed and sworn before me

this ____ day of_____, 20____.

Notary Public _____

SEAL

PETITION FOR PARTIAL OR FULL WAIVER – FORM 3

Bidder/Proposer: Meridian Rapid Defense Group, LLC

Contract No./Title: 2406-07250 / Portable Vehicle Impact Devices

A. BIDDER/PROPOSER HEREBY REQUESTS: N/A

_____ FULL MBE WAIVER	_____ PARTIAL MBE WAIVER
_____ FULL WBE WAIVER	_____ PARTIAL WBE WAIVER
_____ FULL DBE WAIVER	_____ PARTIAL DBE WAIVER

B. REASON FOR PARTIAL/FULL WAIVER REQUEST:

Bidder/Proposer shall check each item applicable to its overall reason for a waiver request. Additionally, supporting documentation shall be submitted with this request.

_____ (1) Lack of sufficient qualified MBEs and/or WBEs capable of providing the goods or services required by the contract.

_____(2) The specifications and necessary requirements for performing the contract make it impossible or economically infeasible to divide the contract to enable the contractor to utilize MBEs and/or WBEs in accordance with the applicable participation.

_____(3) Price(s) quoted by potential MBEs and/or WBEs are above competitive levels and increase cost of doing business and would make acceptance of such MBE and/or WBE bid economically impracticable, taking into consideration the percentage of total contract price represented by such MBE and/or WBE bid.

_____(4) There are other relevant factors making it impossible or economically infeasible to utilize MBE and/or WBE firms.

GOOD FAITH EFFORT TRANSPARENCY REPORT

N/A

C. GOOD FAITH EFFORTS TO OBTAIN PARTICIPATION (attach sheets as necessary as Schedule 1)
Bidder/Proposer shall explain and detail the following Good Faith Efforts undertook to meet Cook County's contract specific goals.

1. Please attach to this form a detailed list of any and all PCEs, stating the PCE certification (MBE and/or WBE as defined by the Cook County Municipal Code) and with whom from the contacted PCEs the Bidder/Proposer engaged, contacted, and/or communicated with in the County's Market Place;

   Timelines:

   a. When the Bidder/Proposer knew of the bid;
   b. When the Bidder/Proposer contacted the PCE(s);
   c. When the Bidder/Proposer formulated its bid and utilization plan; and
   d. When was the bid request due date.

2. The number of timely attempts to contact PCEs providing the type of supplies, equipment, goods, and/or services required for the Procurement, including but not limited to;

   a. Dates of each contact attempt for each contacted PCE;
   b. Whom, if anyone, the Bidder/Proposer communicated and/or corresponded (including written, virtual, digital, electronic, and other feasible methods of communication);
   c. The number of unsuccessful attempts to communicate or correspond with PCEs; and
   d. Attach copies of all solicitations to contacted PCEs.

3. How the Bidder/Proposer proposed to divide the procurement requirements into small tasks and/or quantities into economically feasible units to promote PCE participation.

4. Whether and to what degree the requesting party will endeavor to maximize indirect participation.

5. Detailed explanation of use, if any, of the Office of Contract and Compliance services and staff.

6. Detailed explanation of timely notification and usage of services and assistance provided by community, minority, and/or women business organizations.

7. Attach any other documentation relative to Good Faith Efforts in complying with MBE and WBE participation.

GOOD FAITH EFFORT TRANSPARENCY REPORT

By signing below, I affirm under penalty of perjury the information provided in the Petition for Full or Partial Waiver/Good Faith Effort Transparency Report is truthful, accurate, and complete, to the best of my knowledge and capacity. I agree any finding of false, fraudulent, and/or otherwise misleading information will automatically disqualify the request for a waiver and Cook County's Office of Contract Compliance reserves the right to pursue additional actions and/or remedies against the requesting Bidder/Proposer.

Kelly Sullivan	Corporate Compliance and Governance Administrator	11/21/2024
Signature and Title of Bidder/Proposer	Title	Date

EXHIBIT VI

CERTIFICATE OF INSURANCE

MERIRAP-01 DMOORE

CERTIFICATE OF LIABILITY INSURANCE

DATE (MM/DD/YYYY) 1/22/2025

THIS CERTIFICATE IS ISSUED AS A MATTER OF INFORMATION ONLY AND CONFERS NO RIGHTS UPON THE CERTIFICATE HOLDER. THIS CERTIFICATE DOES NOT AFFIRMATIVELY OR NEGATIVELY AMEND, EXTEND OR ALTER THE COVERAGE AFFORDED BY THE POLICIES BELOW. THIS CERTIFICATE OF INSURANCE DOES NOT CONSTITUTE A CONTRACT BETWEEN THE ISSUING INSURER(S), AUTHORIZED REPRESENTATIVE OR PRODUCER, AND THE CERTIFICATE HOLDER.

IMPORTANT: If the certificate holder is an ADDITIONAL INSURED, the policy(ies) must have ADDITIONAL INSURED provisions or be endorsed. If SUBROGATION IS WAIVED, subject to the terms and conditions of the policy, certain policies may require an endorsement. A statement on this certificate does not confer rights to the certificate holder in lieu of such endorsement(s).

PRODUCER License # L100460
Knauf Maxwell Insurance Services
2900 W. Broadway
Los Angeles, CA 90041

CONTACT NAME:
PHONE (A/C, No, Ext): (323) 550-7900 FAX (A/C, No): (323) 256-0800
E-MAIL ADDRESS: knaufreception@kmins.com

INSURER(S) AFFORDING COVERAGE	NAIC #
INSURER A : Great American Risk Solutions Surplus Lines Insurance Company	35351
INSURER B : CompWest Insurance Company	12177
INSURER C :	
INSURER D :	
INSURER E :	
INSURER F :	

INSURED
Meridian Rapid Defense Group, LLC
530 New Los Angeles Ave., #115-345
Moorpark, CA 93021

COVERAGES **CERTIFICATE NUMBER:** **REVISION NUMBER:**

THIS IS TO CERTIFY THAT THE POLICIES OF INSURANCE LISTED BELOW HAVE BEEN ISSUED TO THE INSURED NAMED ABOVE FOR THE POLICY PERIOD INDICATED. NOTWITHSTANDING ANY REQUIREMENT, TERM OR CONDITION OF ANY CONTRACT OR OTHER DOCUMENT WITH RESPECT TO WHICH THIS CERTIFICATE MAY BE ISSUED OR MAY PERTAIN, THE INSURANCE AFFORDED BY THE POLICIES DESCRIBED HEREIN IS SUBJECT TO ALL THE TERMS, EXCLUSIONS AND CONDITIONS OF SUCH POLICIES. LIMITS SHOWN MAY HAVE BEEN REDUCED BY PAID CLAIMS.

INSR LTR	TYPE OF INSURANCE	ADDL INSD	SUBR WVD	POLICY NUMBER	POLICY EFF (MM/DD/YYYY)	POLICY EXP (MM/DD/YYYY)	LIMITS	
A	X COMMERCIAL GENERAL LIABILITY						EACH OCCURRENCE	$ 1,000,000
	CLAIMS-MADE X OCCUR	X		PL1744899-07	8/4/2024	8/4/2025	DAMAGE TO RENTED PREMISES (Ea occurrence)	$ 500,000
							MED EXP (Any one person)	$ 20,000
							PERSONAL & ADV INJURY	$ 1,000,000
	GEN'L AGGREGATE LIMIT APPLIES PER:						GENERAL AGGREGATE	$ 2,000,000
	POLICY PRO-JECT LOC						PRODUCTS - COMP/OP AGG	$ 2,000,000
	OTHER:							$
	AUTOMOBILE LIABILITY						COMBINED SINGLE LIMIT (Ea accident)	$
	ANY AUTO						BODILY INJURY (Per person)	$
	OWNED AUTOS ONLY / SCHEDULED AUTOS						BODILY INJURY (Per accident)	$
	HIRED AUTOS ONLY / NON-OWNED AUTOS ONLY						PROPERTY DAMAGE (Per accident)	$
								$
A	UMBRELLA LIAB X OCCUR						EACH OCCURRENCE	$ 5,000,000
	X EXCESS LIAB CLAIMS-MADE			XS2664575-06	8/4/2024	8/4/2025	AGGREGATE	$ 5,000,000
	DED X RETENTION $ 0							$
B	WORKERS COMPENSATION AND EMPLOYERS' LIABILITY						X PER STATUTE OTH-ER	
	ANY PROPRIETOR/PARTNER/EXECUTIVE OFFICER/MEMBER EXCLUDED? Y / N (Mandatory in NH)	N / A		CW WCP 10008984304	12/27/2024	12/27/2025	E.L. EACH ACCIDENT	$ 1,000,000
	If yes, describe under DESCRIPTION OF OPERATIONS below						E.L. DISEASE - EA EMPLOYEE	$ 1,000,000
							E.L. DISEASE - POLICY LIMIT	$ 1,000,000

DESCRIPTION OF OPERATIONS / LOCATIONS / VEHICLES (ACORD 101, Additional Remarks Schedule, may be attached if more space is required)
CONTRACT NO. 2406-07250 PORTABLE VEHICLE IMPACT DEVICES
Cook County, its officials, employees and agents shall be named as additional insureds under the Commercial General Liability policy and Automobile Liability policy. Contractor's insurance shall be primary and non-contributory with any insurance maintained by Cook County. Any insurance or self- nsurance maintained by Cook County shall be excess of the Contractor's insurance and shall not contribute with it. The full policy limits and scope of protection shall apply to Cook County as an additional insured even if they exceed the minimum insurance limits specified above.

CERTIFICATE HOLDER

The Cook County Department of Risk Management

CANCELLATION

SHOULD ANY OF THE ABOVE DESCRIBED POLICIES BE CANCELLED BEFORE THE EXPIRATION DATE THEREOF, NOTICE WILL BE DELIVERED IN ACCORDANCE WITH THE POLICY PROVISIONS.

AUTHORIZED REPRESENTATIVE

© 1988-2015 ACORD CORPORATION. All rights reserved.
The ACORD name and logo are registered marks of ACORD

MERIREN-01 DMOORE

CERTIFICATE OF LIABILITY INSURANCE

DATE (MM/DD/YYYY) 11/22/2024

THIS CERTIFICATE IS ISSUED AS A MATTER OF INFORMATION ONLY AND CONFERS NO RIGHTS UPON THE CERTIFICATE HOLDER. THIS CERTIFICATE DOES NOT AFFIRMATIVELY OR NEGATIVELY AMEND, EXTEND OR ALTER THE COVERAGE AFFORDED BY THE POLICIES BELOW. THIS CERTIFICATE OF INSURANCE DOES NOT CONSTITUTE A CONTRACT BETWEEN THE ISSUING INSURER(S), AUTHORIZED REPRESENTATIVE OR PRODUCER, AND THE CERTIFICATE HOLDER.

IMPORTANT: If the certificate holder is an ADDITIONAL INSURED, the policy(ies) must have ADDITIONAL INSURED provisions or be endorsed. If SUBROGATION IS WAIVED, subject to the terms and conditions of the policy, certain policies may require an endorsement. A statement on this certificate does not confer rights to the certificate holder in lieu of such endorsement(s).

PRODUCER License # L100460 Knauf Maxwell Insurance Services 2900 W. Broadway Los Angeles, CA 90041	CONTACT NAME: PHONE (A/C, No, Ext): (323) 550-7900 FAX (A/C, No): (323) 256-0800 E-MAIL ADDRESS: knaufreception@kmins.com
INSURED Meridian Rapid Defense Group, LLC 530 New Los Angeles Ave., #115-345 Pasadena, CA 93021	INSURER(S) AFFORDING COVERAGE — NAIC # INSURER A : Vantapro Specialty Insurance Company — 44768 INSURER B : James River Insurance Company — 12203 INSURER C : INSURER D : INSURER E : INSURER F :

COVERAGES **CERTIFICATE NUMBER:** **REVISION NUMBER:**

THIS IS TO CERTIFY THAT THE POLICIES OF INSURANCE LISTED BELOW HAVE BEEN ISSUED TO THE INSURED NAMED ABOVE FOR THE POLICY PERIOD INDICATED. NOTWITHSTANDING ANY REQUIREMENT, TERM OR CONDITION OF ANY CONTRACT OR OTHER DOCUMENT WITH RESPECT TO WHICH THIS CERTIFICATE MAY BE ISSUED OR MAY PERTAIN, THE INSURANCE AFFORDED BY THE POLICIES DESCRIBED HEREIN IS SUBJECT TO ALL THE TERMS, EXCLUSIONS AND CONDITIONS OF SUCH POLICIES. LIMITS SHOWN MAY HAVE BEEN REDUCED BY PAID CLAIMS.

INSR LTR	TYPE OF INSURANCE	ADDL INSD	SUBR WVD	POLICY NUMBER	POLICY EFF (MM/DD/YYYY)	POLICY EXP (MM/DD/YYYY)	LIMITS	
	COMMERCIAL GENERAL LIABILITY						EACH OCCURRENCE	$
	☐ CLAIMS-MADE ☐ OCCUR						DAMAGE TO RENTED PREMISES (Ea occurrence)	$
							MED EXP (Any one person)	$
							PERSONAL & ADV INJURY	$
	GEN'L AGGREGATE LIMIT APPLIES PER:						GENERAL AGGREGATE	$
	☐ POLICY ☐ PRO-JECT ☐ LOC						PRODUCTS - COMP/OP AGG	$
	☐ OTHER:							$
A	AUTOMOBILE LIABILITY						COMBINED SINGLE LIMIT (Ea accident)	$ 1,000,000
	☐ ANY AUTO	X		5087-1268-01	8/4/2024	8/4/2025	BODILY INJURY (Per person)	$
	☐ OWNED AUTOS ONLY ☒ SCHEDULED AUTOS						BODILY INJURY (Per accident)	$
	☐ HIRED AUTOS ONLY ☐ NON-OWNED AUTOS ONLY						PROPERTY DAMAGE (Per accident)	$
								$
	☐ UMBRELLA LIAB ☐ OCCUR						EACH OCCURRENCE	$
	☐ EXCESS LIAB ☐ CLAIMS-MADE						AGGREGATE	$
	☐ DED ☐ RETENTION $							$
	WORKERS COMPENSATION AND EMPLOYERS' LIABILITY Y / N						☐ PER STATUTE ☐ OTH-ER	
	ANY PROPRIETOR/PARTNER/EXECUTIVE OFFICER/MEMBER EXCLUDED? ☐ (Mandatory in NH)	N / A					E.L. EACH ACCIDENT	$
	If yes, describe under DESCRIPTION OF OPERATIONS below						E.L. DISEASE - EA EMPLOYEE	$
							E.L. DISEASE - POLICY LIMIT	$
B	Business Auto			00138357-2	8/4/2024	8/4/2025	Hired Auto	1,000,000
B	Business Auto			00138357-2	8/4/2024	8/4/2025	Non-Owned Auto	1,000,000

DESCRIPTION OF OPERATIONS / LOCATIONS / VEHICLES (ACORD 101, Additional Remarks Schedule, may be attached if more space is required)

Commercial Auto Policy# 00138357-2 (James River Insurance Company)
Hired and Non-Owned Auto Liability ONLY coverage deductible - $2,500 Per Accident
$2,500 Comprehensive deductible for each covered Auto
$2,500 Collision deductible for each covered Auto
$50,000 maximum value for Hired Auto

CONTRACT NO. 2406-07250 PORTABLE VEHICLE IMPACT DEVICES
SEE ATTACHED ACORD 101

CERTIFICATE HOLDER

The Cook County Department of Risk Management

CANCELLATION

SHOULD ANY OF THE ABOVE DESCRIBED POLICIES BE CANCELLED BEFORE THE EXPIRATION DATE THEREOF, NOTICE WILL BE DELIVERED IN ACCORDANCE WITH THE POLICY PROVISIONS.

AUTHORIZED REPRESENTATIVE

© 1988-2015 ACORD CORPORATION. All rights reserved.
The ACORD name and logo are registered marks of ACORD

AGENCY CUSTOMER ID: MERIREN-01 DMOORE

LOC #:

ADDITIONAL REMARKS SCHEDULE

AGENCY	License # L100460	NAMED INSURED
Knauf Maxwell Insurance Services		Meridian Rapid Defense Group, LLC 530 New Los Angeles Ave., #115-345 Pasadena, CA 93021
POLICY NUMBER		
SEE PAGE 1		
CARRIER	NAIC CODE	EFFECTIVE DATE: SEE PAGE 1
SEE PAGE 1	SEE P 1	

ADDITIONAL REMARKS

THIS ADDITIONAL REMARKS FORM IS A SCHEDULE TO ACORD FORM,

FORM NUMBER: ACORD 25 FORM TITLE: Certificate of Liability Insurance

Description of Operations/Locations/Vehicles:
Cook County, its officials, employees and agents shall be named as additional insureds under the Commercial General Liability policy and Automobile Liability policy. Contractor's insurance shall be primary and non-contributory with any insurance maintained by Cook County. Any insurance or self- nsurance maintained by Cook County shall be excess of the Contractor's insurance and shall not contribute with it. The full policy limits and scope of protection shall apply to Cook County as an additional insured even if they exceed the minimum insurance limits specified above.

© 2008 ACORD CORPORATION. All rights reserved.
The ACORD name and logo are registered marks of ACORD

EXHIBIT VII

ELECTRONIC PAYABLES

OFFICE OF THE COOK COUNTY COMPTROLLER
ELECTRONIC PAYABLES PROGRAM ("E-PAYABLES")

FOR INFORMATION PURPOSES ONLY

This document describes the Office of the Cook County Comptroller's Electronic Payables Program ("E-Payables").
If you wish to participate in E-Payables, please contact the Cook County Comptroller's Office, Accounts Payable, 118 N. Clark Street, Room 500, Chicago, IL 60602.

DESCRIPTION
To increase payment efficiency and timeliness, we have introduced E-Payables program, a new payment initiative to our accounts payable model. This new initiative utilizes a Visa purchasing card and operates through the Visa payment network. This is County's preferred method of payment and your participation in our Visa purchasing card program will provide mutual benefits both to your organization and ours.

As a vendor, you may experience the following benefits by accepting this new payment type:

- Improved cash flow and accelerated payment
- Reduced paperwork and a more streamlined accounts receivable process
- Elimination of stop payment issues
- Reduced payment delays
- Reduced costs for handling paper checks
- Payments settled directly to your merchant account

There are two options within this initiative:

1. Dedicated Credit Card – "PULL" Settlement
For this option, you will have an assigned dedicated credit card to be used for each payment. You will provide a point of contact within your organization who will keep credit card information on file. Each time a payment is made, you will receive a remittance advice via email detailing the invoices being paid. Each time you receive a remittance advice, you will process payments in the same manner you process credit card transactions today.

2. One-Time Use Credit Card – "SUGA" Settlement
For this option, you will provide a point of contact within your organization who will receive an email notification authorizing you to process payments in the same manner you process credit card transactions today. Each time payment is made, you will receive a remittance advice, via email, detailing the invoices being paid. Also, each time you receive a remittance advice, you will receive a new, unique credit card number. This option is ideal for suppliers who are unable to keep credit card account information on file.

REMAINDER OF PAGE INTENTIONALLY LEFT BLANK

EXHIBIT VIII

ECONOMIC DISCLOSURE STATEMENTS AND EXECUTION PAGE

COOK COUNTY
ECONOMIC DISCLOSURE STATEMENT
AND EXECUTION DOCUMENT
INDEX

Section	Description	Pages
1	Instructions for Completion of EDS	EDS i - ii
2	Certifications	EDS 1– 2
3	Economic and Other Disclosures, Affidavit of Child Support Obligations, Disclosure of Ownership Interest and Familial Relationship Disclosure Form	EDS 3 – 12
4	Cook County Affidavit for Wage Theft Ordinance	EDS 13-14
5	Contract and EDS Execution Page	EDS 15
6	Cook County Signature Page	EDS 16

SECTION 1
INSTRUCTIONS FOR COMPLETION OF
ECONOMIC DISCLOSURE STATEMENT AND EXECUTION DOCUMENT

This Economic Disclosure Statement and Execution Document ("EDS") is to be completed and executed by every Bidder on a County contract, every Proposer responding to a Request for Proposals, and every Respondent responding to a Request for Qualifications, and others as required by the Chief Procurement Officer. The execution of the EDS shall serve as the execution of a contract awarded by the County. The Chief Procurement Officer reserves the right to request that the Bidder or Proposer, or Respondent provide an updated EDS on an annual basis.

Definitions. Terms used in this EDS and not otherwise defined herein shall have the meanings given to such terms in the Instructions to Bidders, General Conditions, Request for Proposals, Request for Qualifications, as applicable.

Affiliate means a person that directly or indirectly through one or more intermediaries, Controls is Controlled by, or is under common Control with the Person specified.

Applicant means a person who executes this EDS.

Bidder means any person who submits a Bid.

Code means the Code of Ordinances, Cook County, Illinois available on municode.com.

Contract shall include any written document to make Procurements by or on behalf of Cook County.

Contractor or *Contracting Party* means a person that enters into a Contract with the County.

Control means the unfettered authority to directly or indirectly manage governance, administration, work, and all other aspects of a business.

EDS means this complete Economic Disclosure Statement and Execution Document, including all sections listed in the Index and any attachments.

Joint Venture means an association of two or more Persons proposing to perform a for-profit business enterprise. Joint Ventures must have an agreement in writing specifying the terms and conditions of the relationship between the partners and their relationship and respective responsibility for the Contract

Lobby or lobbying means to, for compensation, attempt to influence a County official or County employee with respect to any County matter.

Lobbyist means any person who lobbies.

Person or *Persons* means any individual, corporation, partnership, Joint Venture, trust, association, Limited Liability Company, sole proprietorship or other legal entity.

Prohibited Acts means any of the actions or occurrences which form the basis for disqualification under the Code, or under the Certifications hereinafter set forth.

Proposal means a response to an RFP.

Proposer means a person submitting a Proposal.

Response means response to an RFQ.

Respondent means a person responding to an RFQ.

RFP means a Request for Proposals issued pursuant to this Procurement Code.

RFQ means a Request for Qualifications issued to obtain the qualifications of interested parties.

INSTRUCTIONS FOR COMPLETION OF ECONOMIC DISCLOSURE STATEMENT AND EXECUTION DOCUMENT

Section 1: Instructions. Section 1 sets forth the instructions for completing and executing this EDS.

Section 2: Certifications. Section 2 sets forth certifications that are required for contracting parties under the Code and other applicable laws. Execution of this EDS constitutes a warranty that all the statements and certifications contained, and all the facts stated, in the Certifications are true, correct and complete as of the date of execution.

Section 3: Economic and Other Disclosures Statement. Section 3 is the County's required Economic and Other Disclosures Statement form. Execution of this EDS constitutes a warranty that all the information provided in the EDS is true, correct and complete as of the date of execution, and binds the Applicant to the warranties, representations, agreements and acknowledgements contained therein.

Required Updates. The Applicant is required to keep all information provided in this EDS current and accurate. In the event of any change in the information provided, including but not limited to any change which would render inaccurate or incomplete any certification or statement made in this EDS, the Applicant shall supplement this EDS up to the time the County takes action, by filing an amended EDS or such other documentation as is required.

Additional Information. The County's Governmental Ethics and Campaign Financing Ordinances impose certain duties and obligations on persons or entities seeking County contracts, work, business, or transactions, and the Applicant is expected to comply fully with these ordinances. For further information please contact the Director of Ethics at (312) 603-4304 (69 W. Washington St. Suite 3040, Chicago, IL 60602) or visit the web-site at cookcountyil.gov/ethics-board-of.

Authorized Signers of Contract and EDS Execution Page. If the Applicant is a corporation, the President and Secretary must execute the EDS. In the event that this EDS is executed by someone other than the President, attach hereto a certified copy of that section of the Corporate By-Laws or other authorization by the Corporation, satisfactory to the County that permits the person to execute EDS for said corporation. If the corporation is not registered in the State of Illinois, a copy of the Certificate of Good Standing from the state of incorporation must be submitted with this Signature Page.

If the Applicant is a partnership or joint venture, all partners or joint venturers must execute the EDS, unless one partner or joint venture has been authorized to sign for the partnership or joint venture, in which case, the partnership agreement, resolution or evidence of such authority satisfactory to the Office of the Chief Procurement Officer must be submitted with this Signature Page.

If the Applicant is a member-managed LLC all members must execute the EDS, unless otherwise provided in the operating agreement, resolution or other corporate documents. If the Applicant is a manager-managed LLC, the manager(s) must execute the EDS. The Applicant must attach either a certified copy of the operating agreement, resolution or other authorization, satisfactory to the County, demonstrating such person has the authority to execute the EDS on behalf of the LLC. If the LLC is not registered in the State of Illinois, a copy of a current Certificate of Good Standing from the state of incorporation must be submitted with this Signature Page.

If the Applicant is a Sole Proprietorship, the sole proprietor must execute the EDS.

A "Partnership" "Joint Venture" or "Sole Proprietorship" operating under an Assumed Name must be registered with the Illinois county in which it is located, as provided in 805 ILCS 405 (2012), and documentation evidencing registration must be submitted with the EDS.

Effective October 1, 2016 all foreign corporations and LLCs must be registered with the Illinois Secretary of State's Office unless a statutory exemption applies to the applicant. Applicants who are exempt from registering must provide a written statement explaining why they are exempt from registering as a foreign entity with the Illinois Secretary of State's Office.

SECTION 2

CERTIFICATIONS

THE FOLLOWING CERTIFICATIONS ARE MADE PURSUANT TO STATE LAW AND THE CODE. THE APPLICANT IS CAUTIONED TO CAREFULLY READ THESE CERTIFICATIONS PRIOR TO SIGNING THE SIGNATURE PAGE. SIGNING THE SIGNATURE PAGE SHALL CONSTITUTE A WARRANTY BY THE APPLICANT THAT ALL THE STATEMENTS, CERTIFICATIONS AND INFORMATION SET FORTH WITHIN THESE CERTIFICATIONS ARE TRUE, COMPLETE AND CORRECT AS OF THE DATE THE SIGNATURE PAGE IS SIGNED. THE APPLICANT IS NOTIFIED THAT IF THE COUNTY LEARNS THAT ANY OF THE FOLLOWING CERTIFICATIONS WERE FALSELY MADE, THAT ANY CONTRACT ENTERED INTO WITH THE APPLICANT SHALL BE SUBJECT TO TERMINATION.

A. PERSONS AND ENTITIES SUBJECT TO DISQUALIFICATION

No person or business entity shall be awarded a contract or sub-contract, for a period of five (5) years from the date of conviction or entry of a plea or admission of guilt, civil or criminal, if that person or business entity:

1) Has been convicted of an act committed, within the State of Illinois, of bribery or attempting to bribe an officer or employee of a unit of state, federal or local government or school district in the State of Illinois in that officer's or employee's official capacity;

2) Has been convicted by federal, state or local government of an act of bid-rigging or attempting to rig bids as defined in the Sherman Anti-Trust Act and Clayton Act. Act. 15 U.S.C. Section 1 *et seq.;*

3) Has been convicted of bid-rigging or attempting to rig bids under the laws of federal, state or local government;

4) Has been convicted of an act committed, within the State**,** of price-fixing or attempting to fix prices as defined by the Sherman Anti-Trust Act and the Clayton Act. 15 U.S.C. Section 1, *et seq.;*

5) Has been convicted of price-fixing or attempting to fix prices under the laws the State;

6) Has been convicted of defrauding or attempting to defraud any unit of state or local government or school district within the State of Illinois;

7) Has made an admission of guilt of such conduct as set forth in subsections (1) through (6) above which admission is a matter of record, whether or not such person or business entity was subject to prosecution for the offense or offenses admitted to; or

8) Has entered a plea of *nolo contendere* to charge of bribery, price-fixing, bid-rigging, or fraud, as set forth in sub-paragraphs (1) through (6) above.

In the case of bribery or attempting to bribe, a business entity may not be awarded a contract if an official, agent or employee of such business entity committed the Prohibited Act on behalf of the business entity and pursuant to the direction or authorization of an officer, director or other responsible official of the business entity, and such Prohibited Act occurred within three years prior to the award of the contract. In addition, a business entity shall be disqualified if an owner, partner or shareholder controlling, directly or indirectly, 20% or more of the business entity, or an officer of the business entity has performed any Prohibited Act within five years prior to the award of the Contract.

THE APPLICANT HEREBY CERTIFIES THAT**:** The Applicant has read the provisions of Section A, Persons and Entities Subject to Disqualification, that the Applicant has not committed any Prohibited Act set forth in Section A, and that award of the Contract to the Applicant would not violate the provisions of such Section or of the Code.

B. BID-RIGGING OR BID ROTATING

THE APPLICANT HEREBY CERTIFIES THAT: *In accordance with 720 ILCS 5/33 E-11, neither the Applicant nor any Affiliated Entity is barred from award of this Contract as a result of a conviction for the violation of State laws prohibiting bid-rigging or bid rotating.*

C. DRUG FREE WORKPLACE ACT

THE APPLICANT HEREBY CERTIFIES THAT**:** The Applicant will provide a drug free workplace, as required by (30 ILCS 580/3).

D. DELINQUENCY IN PAYMENT OF TAXES

THE APPLICANT HEREBY CERTIFIES THAT*: The Applicant is not an owner or a party responsible for the payment of any tax or fee administered by Cook County, such as bar award of a contract or subcontract pursuant to the Code, Chapter 34, Section 34-171.*

E. HUMAN RIGHTS ORDINANCE

No person who is a party to a contract with Cook County ("County") shall engage in unlawful discrimination or sexual harassment against any individual in the terms or conditions of employment, credit, public accommodations, housing, or provision of County facilities, services or programs (Code Chapter 42, Section 42-30 *et seq.*).

F. ILLINOIS HUMAN RIGHTS ACT

THE APPLICANT HEREBY CERTIFIES THAT: *It is in compliance with the Illinois Human Rights Act (775 ILCS 5/2-105), and agrees to abide by the requirements of the Act as part of its contractual obligations.*

G. INSPECTOR GENERAL (COOK COUNTY CODE, CHAPTER 34, SECTION 34-174 and Section 34-250)

The Applicant has not willfully failed to cooperate in an investigation by the Cook County Independent Inspector General or to report to the Independent Inspector General any and all information concerning conduct which they know to involve corruption, or other criminal activity, by another county employee or official, which concerns his or her office of employment or County related transaction.

The Applicant has reported directly and without any undue delay any suspected or known fraudulent activity in the County's Procurement process to the Office of the Cook County Inspector General.

H. CAMPAIGN CONTRIBUTIONS (COOK COUNTY CODE, CHAPTER 2, SECTION 2-585)

THE APPLICANT CERTIFIES THAT: It has read and shall comply with the Cook County's Ordinance concerning campaign contributions, which is codified at Chapter 2, Division 2, Subdivision II, Section 585, and can be read in its entirety at www.municode.com.

I. GIFT BAN, (COOK COUNTY CODE, CHAPTER 2, SECTION 2-574)

THE APPLICANT CERTIFIES THAT: It has read and shall comply with the Cook County's Ordinance concerning receiving and soliciting gifts and favors, which is codified at Chapter 2, Division 2, Subdivision II, Section 574, and can be read in its entirety at www.municode.com.

J. LIVING WAGE ORDINANCE PREFERENCE (COOK COUNTY CODE, CHAPTER 34, SECTION 34-160;

Unless expressly waived by the Cook County Board of Commissioners, the Code requires that a living wage must be paid to individuals employed by a Contractor which has a County Contract and by all subcontractors of such Contractor under a County Contract, throughout the duration of such County Contract. The amount of such living wage is annually by the Chief Financial Officer of the County, and shall be posted on the Chief Procurement Officer's website.

The term "Contract" as used in Section 4, I, of this EDS, specifically excludes contracts with the following:

1) Not-For Profit Organizations (defined as a corporation having tax exempt status under Section 501(C)(3) of the United State Internal Revenue Code and recognized under the Illinois State not-for -profit law);

2) Community Development Block Grants;

3) Cook County Works Department;

4) Sheriff's Work Alternative Program; and

5) Department of Correction inmates.

SECTION 3

REQUIRED DISCLOSURES

1. DISCLOSURE OF LOBBYIST CONTACTS

List all persons that have made lobbying contacts on your behalf with respect to this contract:

Name Address

NONE

2. LOCAL BUSINESS PREFERENCE STATEMENT (CODE, CHAPTER 34, SECTION 34-230)

Local business means a Person, including a foreign corporation authorized to transact business in Illinois, having a bona fide establishment located within the County at which it is transacting business on the date when a Bid is submitted to the County, and which employs the majority of its regular, full-time work force within the County. A Joint Venture shall constitute a Local Business if one or more Persons that qualify as a "Local Business" hold interests totaling over 50 percent in the Joint Venture, even if the Joint Venture does not, at the time of the Bid submittal, have such a bona fide establishment within the County.

a) Is Applicant a "Local Business" as defined above?

Yes:_____ No: ☑

b) If yes, list business addresses within Cook County:

c) Does Applicant employ the majority of its regular full-time workforce within Cook County?

Yes: ☐ No: ☑

3. THE CHILD SUPPORT ENFORCEMENT ORDINANCE (CODE, CHAPTER 34, SECTION 34-172)

Every Applicant for a County Privilege shall be in full compliance with any child support order before such Applicant is entitled to receive or renew a County Privilege. When delinquent child support exists, the County shall not issue or renew any County Privilege, and may revoke any County Privilege.

All Applicants are required to review the Cook County Affidavit of Child Support Obligations attached to this EDS (EDS-5) and complete the Affidavit, based on the instructions in the Affidavit.

4. REAL ESTATE OWNERSHIP DISCLOSURES.

The Applicant must indicate by checking the appropriate provision below and providing all required information that either:

a) The following is a complete list of all real estate owned by the Applicant in Cook County:

PERMANENT INDEX NUMBER(S): NONE

(ATTACH SHEET IF NECESSARY TO LIST ADDITIONAL INDEX NUMBERS)

OR:

b) ✓ The Applicant owns no real estate in Cook County.

5. EXCEPTIONS TO CERTIFICATIONS OR DISCLOSURES.

If the Applicant is unable to certify to any of the Certifications or any other statements contained in this EDS and not explained elsewhere in this EDS, the Applicant must explain below:

If the letters, "NA", the word "None" or "No Response" appears above, or if the space is left blank, it will be conclusively presumed that the Applicant certified to all Certifications and other statements contained in this EDS.

COOK COUNTY DISCLOSURE OF OWNERSHIP INTEREST STATEMENT

The Cook County Code of Ordinances (§2-610 *et seq.*) requires that any Applicant for any County Action must disclose information concerning ownership interests in the Applicant. This Disclosure of Ownership Interest Statement must be completed with all information current as of the date this Statement is signed. Furthermore, this Statement must be kept current, by filing an amended Statement, until such time as the County Board or County Agency shall take action on the application. The information contained in this Statement will be maintained in a database and made available for public viewing. **County reserves the right to request additional information to verify veracity of information contained in this statement.**

If you are asked to list names, but there are no applicable names to list, you must state NONE. An incomplete Statement will be returned and any action regarding this contract will be delayed. A failure to fully comply with the ordinance may result in the action taken by the County Board or County Agency being voided.

"*Applicant*" means any Entity or person making an application to the County for any County Action.

"County Action" means any action by a County Agency, a County Department, or the County Board regarding an ordinance or ordinance amendment, a County Board approval, or other County agency approval, with respect to contracts, leases, or sale or purchase of real estate.

"Person" "Entity" or *"Legal Entity"* means a sole proprietorship, corporation, partnership, association, business trust, estate, two or more persons having a joint or common interest, trustee of a land trust, other commercial or legal entity or any beneficiary or beneficiaries thereof.

This Disclosure of Ownership Interest Statement must be submitted by :

1. An Applicant for County Action and

2. A Person that holds stock or a beneficial interest in the Applicant and is listed on the Applicant's Statement (a "Holder") must file a Statement and complete #1 only under **Ownership Interest Declaration**.

Please print or type responses clearly and legibly. Add additional pages if needed, being careful to identify each portion of the form to which each additional page refers.

This Statement is being made by the [✓] Applicant or [ ] Stock/Beneficial Interest Holder

This Statement is an: [✓] Original Statement or [ ] Amended Statement

Identifying Information:

Name Meridian Rapid Defense Group LLC

D/B/A: _____ FEIN # Only: 35-2292111

Street Address: 222 N. Pacific Coast Hwy Floor 10

City: El Segundo State: CA Zip Code: 90245

Phone No.: (626) 319-1479 Fax Number: (310) 356-3193 Email: KSULLIVAN@meridian-barrier.com

Cook County Business Registration Number: _____
(Sole Proprietor, Joint Venture Partnership)

Corporate File Number (if applicable): _____

Form of Legal Entity:

[ ] Sole Proprietor [ ] Partnership [ ] Corporation [ ] Trustee of Land Trust

[ ] Business Trust [ ] Estate [ ] Association [ ] Joint Venture

[✓] Other (describe) LLC

Ownership Interest Declaration:

1. List the name(s), address, and percent ownership of each Person having a legal or beneficial interest (including ownership) of more than five percent (5%) in the Applicant/Holder.

Name	Address	Percentage Interest in Applicant/Holder
Normandy Capital Ventures LLC	177 E. Colorado Blvd, Suite 200, Pasadena, CA 91105	98%

2. If the interest of any Person listed in (1) above is held as an agent or agents, or a nominee or nominees, list the name and address of the principal on whose behalf the interest is held.

Name of Agent/Nominee	Name of Principal	Principal's Address

3. Is the Applicant constructively controlled by another person or Legal Entity? [X] Yes [ ] No

If yes, state the name, address and percentage of beneficial interest of such person, and the relationship under which such control is being or may be exercised.

Name	Address	Percentage of Beneficial Interest	Relationship
Peter D. Whitford	177 E. Colorado Blvd., Suite 200, Pasadena, CA 91105	100%	Owner

Corporate Officers, Members and Partners Information:

For all corporations, list the names, addresses, and terms for all corporate officers. For all limited liability companies, list the names, addresses for all members. For all partnerships and joint ventures, list the names, addresses, for each partner or joint venture.

Name	Address	Title (specify title of Office, or whether manager or partner/joint venture)	Term of Office
Peter D. Whitford	177 E. Colorado Blvd, Suite 200, Pasadena, CA 91105		
Georgina W. Whitford	177 E. Colorado Blvd., Suite 200, Pasadena, CA 91105		

Declaration (check the applicable box):

☑ I state under oath that the Applicant has withheld no disclosure as to ownership interest in the Applicant nor reserved any information, data or plan as to the intended use or purpose for which the Applicant seeks County Board or other County Agency action.

☐ I state under oath that the Holder has withheld no disclosure as to ownership interest nor reserved any information required to be disclosed.

COOK COUNTY DISCLOSURE OF OWNERSHIP INTEREST STATEMENT SIGNATURE PAGE

Kelly Sullivan
Name of Authorized Applicant/Holder Representative (please print or type)

Compliance & Governance Administrator
Title

Kelly Sullivan
Signature

11/22/2024
Date

ksullivan@meridian-barrier.com
E-mail address

(626) 319-1479
Phone Number

Subscribed to and sworn before me
this _____ day of _____, 20__.

My commission expires:

x Please see attached Jurat
Notary Public Signature

Notary Seal

CALIFORNIA JURAT WITH AFFIANT STATEMENT **GOVERNMENT CODE § 8202**

☒ See Attached Document (Notary to cross out lines 1–6 below)
☐ See Statement Below (Lines 1–6 to be completed only by document signer[s], *not* Notary)

Signature of Document Signer No. 1

Signature of Document Signer No. 2 (if any)

A notary public or other officer completing this certificate verifies only the identity of the individual who signed the document to which this certificate is attached, and not the truthfulness, accuracy, or validity of that document.

State of California
County of Los Angeles

Subscribed and sworn to (or affirmed) before me on this 22nd (*Date*) day of Nov. (*Month*), 2024 (*Year*),
by
(1) Kelly Sullivan
(and (2)_____),
Name(s) of Signer(s)

proved to me on the basis of satisfactory evidence to be the person(s) who appeared before me.

ROBIN J. FOSSELMAN
Notary Public - California
Los Angeles County
Commission # 2410413
My Comm. Expires Aug 3, 2026

Signature Robin J Fosselman
Signature of Notary Public

Seal
Place Notary Seal Above

OPTIONAL

Though this section is optional, completing this information can deter alteration of the document or fraudulent reattachment of this form to an unintended document.

Description of Attached Document

Title or Type of Document: Disclosure of Ownership Document Date: _____

Number of Pages: _____ Signer(s) Other Than Named Above: _____

©2014 National Notary Association • www.NationalNotary.org • 1-800-US NOTARY (1-800-876-6827) Item #5910

CONTRACT #: 2406-07250

COOK COUNTY DISCLOSURE OF OWNERSHIP INTEREST STATEMENT

The Cook County Code of Ordinances (§2-610 *et seq.*) requires that any Applicant for any County Action must disclose information concerning ownership interests in the Applicant. This Disclosure of Ownership Interest Statement must be completed with all information current as of the date this Statement is signed. Furthermore, this Statement must be kept current, by filing an amended Statement, until such time as the County Board or County Agency shall take action on the application. The information contained in this Statement will be maintained in a database and made available for public viewing. **County reserves the right to request additional information to verify veracity of information contained in this statement.**

If you are asked to list names, but there are no applicable names to list, you must state NONE. An incomplete Statement will be returned and any action regarding this contract will be delayed. A failure to fully comply with the ordinance may result in the action taken by the County Board or County Agency being voided.

"*Applicant*" means any Entity or person making an application to the County for any County Action.

"County Action" means any action by a County Agency, a County Department, or the County Board regarding an ordinance or ordinance amendment, a County Board approval, or other County agency approval, with respect to contracts, leases, or sale or purchase of real estate.

"Person" "Entity" or *"Legal Entity"* means a sole proprietorship, corporation, partnership, association, business trust, estate, two or more persons having a joint or common interest, trustee of a land trust, other commercial or legal entity or any beneficiary or beneficiaries thereof.

This Disclosure of Ownership Interest Statement must be submitted by :

1. An Applicant for County Action and

2. A Person that holds stock or a beneficial interest in the Applicant and is listed on the Applicant's Statement (a "Holder") must file a Statement and complete #1 only under **Ownership Interest Declaration**.

Please print or type responses clearly and legibly. Add additional pages if needed, being careful to identify each portion of the form to which each additional page refers.

This Statement is being made by the [ ] Applicant or [X] Stock/Beneficial Interest Holder

This Statement is an: [X] Original Statement or [ ] Amended Statement

Identifying Information:

Name Normandy Capital Ventures LLC

D/B/A: _____ FEIN # Only: 93-3962257

Street Address: 177 E. Colorado Blvd., Suite 200

City: Pasadena State: CA Zip Code: 91105

Phone No.: (818) 359-9502 Fax Number: _____ Email: pwhitford@meridian-barrier.com

Cook County Business Registration Number: _____
(Sole Proprietor, Joint Venture Partnership)

Corporate File Number (if applicable): _____

Form of Legal Entity:

[ ] Sole Proprietor [ ] Partnership [ ] Corporation [ ] Trustee of Land Trust

[ ] Business Trust [ ] Estate [ ] Association [ ] Joint Venture

[✓] Other (describe) LLC

CONTRACT #: 2406 - 07250

Ownership Interest Declaration:

1. List the name(s), address, and percent ownership of each Person having a legal or beneficial interest (including ownership) of more than five percent (5%) in the Applicant/Holder.

Name	Address	Percentage Interest in Applicant/Holder
Peter D. Whitford	177 E. Colorado Blvd. Suite 200 Pasadena, CA 91105	100%

2. If the interest of any Person listed in (1) above is held as an agent or agents, or a nominee or nominees, list the name and address of the principal on whose behalf the interest is held.

Name of Agent/Nominee	Name of Principal	Principal's Address

3. Is the Applicant constructively controlled by another person or Legal Entity? [☐] Yes [☑] No

If yes, state the name, address and percentage of beneficial interest of such person, and the relationship under which such control is being or may be exercised.

Name	Address	Percentage of Beneficial Interest	Relationship

Corporate Officers, Members and Partners Information:

For all corporations, list the names, addresses, and terms for all corporate officers. For all limited liability companies, list the names, addresses for all members. For all partnerships and joint ventures, list the names, addresses, for each partner or joint venture.

Name	Address	Title (specify title of Office, or whether manager or partner/joint venture)	Term of Office
Peter D. Whitford	177 E. Colorado Blvd, Suite 200 Pasadena, CA 91105		

Declaration (check the applicable box):

☐ I state under oath that the Applicant has withheld no disclosure as to ownership interest in the Applicant nor reserved any information, data or plan as to the intended use or purpose for which the Applicant seeks County Board or other County Agency action.

☑ I state under oath that the Holder has withheld no disclosure as to ownership interest nor reserved any information required to be disclosed.

CONTRACT #: 2400 - 07250

COOK COUNTY DISCLOSURE OF OWNERSHIP INTEREST STATEMENT SIGNATURE PAGE

Kelly Sullivan
Name of Authorized Applicant/Holder Representative (please print or type)

Compliance Administrator
Title

Kelly Sullivan
Signature

12/5/2024
Date

KSullivan@meridian-barrier.com
E-mail address

(626) 319-1479
Phone Number

Subscribed to and sworn before me
this _____ day of _____, 20__.

My commission expires:

x Please see attached
Notary Public Signature

Notary Seal

November 21, 2024

Hermine Wise
Lead Contract Negotiator
Office of the Chief Procurement Officer (OCPO)
161 N. Clark, Suite 2300
Chicago, IL 60601
Sent Via Email to: Hermine.Wise@cookcountyil.gov

Dear Hermine:

This is to confirm and certify that Ms. Kelly Sullivan is authorized to sign and submit any and all documents to Cook County in furtherance of the response of Meridian Rapid Defense Group LLC ("Meridian") to the County's Contract Number 2406-07250 for Portable Vehicle Impact Devices. Ms. Sullivan is the Compliance and Governance Administrator of Meridian.

Thank you for this opportunity.

Sincerely,

Peter D. Whitford

Peter D. Whitford
CEO
MERIDIAN® RAPID DEFENSE GROUP
177 E. Colorado Blvd., Suite 200
Pasadena, CA 91105
+1.818.359.9502 (cell)

This hereby Certifies that the above confirmation and certification by Peter D. Whitford is duly authorized by Meridian Rapid Defense Group LLC.

Dated: November 21, 2024

Jim Miller
Head of Global Corporate Compliance
MERIDIAN RAPID DEFENSE GROUP LLC
Jmiller@meridian-barrier.com
Direct Phone: (310) 748-8055
Making...People, Communities & Places Safer
Made in America
100% Lifetime Guarantee
www.Meridian-Barrier.com

CONTRACT #: 2406 - 07250

COOK COUNTY BOARD OF ETHICS
69 W. WASHINGTON STREET, SUITE 3040
CHICAGO, ILLINOIS 60602
312/603-4304 Office 312/603-9988 Fax

FAMILIAL RELATIONSHIP DISCLOSURE PROVISION

Nepotism Disclosure Requirement:

Doing a significant amount of business with the County requires that you disclose to the Board of Ethics the existence of any familial relationships with any County employee or any person holding elective office in the State of Illinois, the County, or in any municipality within the County. The Ethics Ordinance defines a significant amount of business for the purpose of this disclosure requirement as more than $25,000 in aggregate County leases, contracts, purchases or sales in any calendar year.

If you are unsure of whether the business you do with the County or a County agency will cross this threshold, err on the side of caution by completing the attached familial disclosure form because, among other potential penalties, any person found guilty of failing to make a required disclosure or knowingly filing a false, misleading, or incomplete disclosure will be prohibited from doing any business with the County for a period of three years. The required disclosure should be filed with the Board of Ethics by January 1 of each calendar year in which you are doing business with the County and again with each bid/proposal/quotation to do business with Cook County. The Board of Ethics may assess a late filing fee of $100 per day after an initial 30-day grace period.

The person that is doing business with the County must disclose his or her familial relationships. If the person on the County lease or contract or purchasing from or selling to the County is a business entity, then the business entity must disclose the familial relationships of the individuals who are and, during the year prior to doing business with the County, were:

- its board of directors,
- its officers,
- its employees or independent contractors responsible for the general administration of the entity,
- its agents authorized to execute documents on behalf of the entity, and
- its employees who directly engage or engaged in doing work with the County on behalf of the entity.

Do not hesitate to contact the Board of Ethics at (312) 603-4304 for assistance in determining the scope of any required familial relationship disclosure.

Additional Definitions:

"*Familial relationship*" means a person who is a spouse, domestic partner or civil union partner of a County employee or State, County or municipal official, or any person who is related to such an employee or official, whether by blood, marriage or adoption, as a:

- ☐ Parent
- ☐ Child
- ☐ Brother
- ☐ Sister
- ☐ Aunt
- ☐ Uncle
- ☐ Niece
- ☐ Nephew
- ☐ Grandparent
- ☐ Grandchild
- ☐ Father-in-law
- ☐ Mother-in-law
- ☐ Son-in-law
- ☐ Daughter-in-law
- ☐ Brother-in-law
- ☐ Sister-in-law
- ☐ Stepfather
- ☐ Stepmother
- ☐ Stepson
- ☐ Stepdaughter
- ☐ Stepbrother
- ☐ Stepsister
- ☐ Half-brother
- ☐ Half-sister

CONTRACT #: 2406-07250

COOK COUNTY BOARD OF ETHICS
FAMILIAL RELATIONSHIP DISCLOSURE FORM

A. PERSON DOING OR SEEKING TO DO BUSINESS WITH THE COUNTY

Name of Person Doing Business with the County: Meridian Rapid Defense Group LLC

Address of Person Doing Business with the County: 222 N. Pacific Coast Hwy, Floor 10 El Segundo, CA 90245

Phone number of Person Doing Business with the County: (626) 319-1479

Email address of Person Doing Business with the County: KSullivan@meridian-barrier.com

If Person Doing Business with the County is a Business Entity, provide the name, title and contact information for the individual completing this disclosure on behalf of the Person Doing Business with the County:
Kelly Sullivan, Corporate Compliance and Governance Administrator
KSullivan@meridian-barrier.com (626) 319-1479

B. DESCRIPTION OF BUSINESS WITH THE COUNTY

Append additional pages as needed and for each County lease, contract, purchase or sale sought and/or obtained during the calendar year of this disclosure (or the proceeding calendar year if disclosure is made on January 1), identify:

The lease number, contract number, purchase order number, request for proposal number and/or request for qualification number associated with the business you are doing or seeking to do with the County: _____

2406-07250

The aggregate dollar value of the business you are doing or seeking to do with the County: $ 442,394.57

The name, title and contact information for the County official(s) or employee(s) involved in negotiating the business you are doing or seeking to do with the County: _____

Hermine Wise, Hermine.Wise@cookcountyil.gov, (312) 603-5483

The name, title and contact information for the County official(s) or employee(s) involved in managing the business you are doing or seeking to do with the County: _____

Ellen O'Connor, Manager Grants and Contracts, Ellen.OConner@cookcountyil.gov

C. DISCLOSURE OF FAMILIAL RELATIONSHIPS WITH COUNTY EMPLOYEES OR STATE, COUNTY OR MUNICIPAL ELECTED OFFICIALS

Check the box that applies and provide related information where needed

☐ The Person Doing Business with the County **is an individual** and there is **no familial relationship** between this individual and any Cook County employee or any person holding elective office in the State of Illinois, Cook County, or any municipality within Cook County.

☒ The Person Doing Business with the County **is a business entity** and there is **no familial relationship** between any member of this business entity's board of directors, officers, persons responsible for general administration of the business entity, agents authorized to execute documents on behalf of the business entity or employees directly engaged in contractual work with the County on behalf of the business entity, and any Cook County employee or any person holding elective office in the State of Illinois, Cook County, or any municipality within Cook County.

CONTRACT #: 2406 - 07250

COOK COUNTY BOARD OF ETHICS
FAMILIAL RELATIONSHIP DISCLOSURE FORM

☐ The Person Doing Business with the County **is an individual** and **there is a familial relationship** between this individual and at least one Cook County employee and/or a person or persons holding elective office in the State of Illinois, Cook County, and/or any municipality within Cook County. **The familial relationships are as follows:**

Name of Individual Doing Business with the County	Name of Related County Employee or State, County or Municipal Elected Official	Title and Position of Related County Employee or State, County or Municipal Elected Official	Nature of Familial Relationship*
N/A			

If more space is needed, attach an additional sheet following the above format.

☐ The Person Doing Business with the County **is a business entity** and **there is a familial relationship** between at least one member of this business entity's board of directors, officers, persons responsible for general administration of the business entity, agents authorized to execute documents on behalf of the business entity and/or employees directly engaged in contractual work with the County on behalf of the business entity, on the one hand, and at least one Cook County employee and/or a person holding elective office in the State of Illinois, Cook County, and/or any municipality within Cook County, on the other. **The familial relationships are as follows:**

Name of Member of Board of Director for Business Entity Doing Business with the County	Name of Related County Employee or State, County or Municipal Elected Official	Title and Position of Related County Employee or State, County or Municipal Elected Official	Nature of Familial Relationship*
N/A			

Name of Officer for Business Entity Doing Business with the County	Name of Related County Employee or State, County or Municipal Elected Official	Title and Position of Related County Employee or State, County or Municipal Elected Official	Nature of Familial Relationship*
N/A			

CONTRACT #: 2406 - 07250

Name of Person Responsible for the General Administration of the Business Entity Doing Business with the County	Name of Related County Employee or State, County or Municipal Elected Official	Title and Position of Related County Employee or State, County or Municipal Elected Official	Nature of Familial Relationship*
N/A			

Name of Agent Authorized to Execute Documents for Business Entity Doing Business with the County	Name of Related County Employee or State, County or Municipal Elected Official	Title and Position of Related County Employee or State, County or Municipal Elected Official	Nature of Familial Relationship*
N/A			

Name of Employee of Business Entity Directly Engaged in Doing Business with the County	Name of Related County Employee or State, County or Municipal Elected Official	Title and Position of Related County Employee or State, County or Municipal Elected Official	Nature of Familial Relationship*
N/A			

If more space is needed, attach an additional sheet following the above format.

VERIFICATION: To the best of my knowledge, the information I have provided on this disclosure form is accurate and complete. I acknowledge that an inaccurate or incomplete disclosure is punishable by law, including but not limited to fines and debarment.

Peter D. Whitford
Signature of Recipient

12/13/2024
Date

SUBMIT COMPLETED FORM TO: Cook County Board of Ethics
69 West Washington Street, Suite 3040, Chicago, Illinois 60602
Office (312) 603-4304 – Fax (312) 603-9988
CookCounty.Ethics@cookcountyil.gov

* Spouse, domestic partner, civil union partner or parent, child, sibling, aunt, uncle, niece, nephew, grandparent or grandchild by blood, marriage (*i.e.* in laws and step relations) or adoption.

CONTRACT #: 2406 - 07250

SECTION 4

COOK COUNTY AFFIDAVIT FOR WAGE THEFT ORDINANCE

Effective May 1, 2015, every Person, ***including Substantial Owners***, seeking a Contract with Cook County must comply with the Cook County Wage Theft Ordinance set forth in Chapter 34, Article IV, Section 179. Any Person/Substantial Owner, who fails to comply with Cook County Wage Theft Ordinance, may request that the Chief Procurement Officer grant a reduction or waiver in accordance with Section 34-179(d).

"*Contract*" means any written document to make Procurements by or on behalf of Cook County.

"*Person*" means any individual, corporation, partnership, Joint Venture, trust, association, limited liability company, sole proprietorship or other legal entity.

"*Procurement*" means obtaining supplies, equipment, goods, or services of any kind.

"*Substantial Owner*" means any person or persons who own or hold a twenty-five percent (25%) or more percentage of interest in any business entity seeking a County Privilege, including those shareholders, general or limited partners, beneficiaries and principals; except where a business entity is an individual or sole proprietorship, Substantial Owner means that individual or sole proprietor.

All Persons/Substantial Owners are required to complete this affidavit and comply with the Cook County Wage Theft Ordinance before any Contract is awarded. Signature of this form constitutes a certification the information provided below is correct and complete, and that the individual(s) signing this form has/have personal knowledge of such information. **County reserves the right to request additional information to verify veracity of information contained in this Affidavit.**

I. Contract Information:

Contract Number: 2406-07250

County Using Agency (requesting Procurement): Cook County Department of Emergency Management Regional Services

II. Person/Substantial Owner Information:

Person (Corporate Entity Name): Meridian Rapid Defense Group, LLC

Substantial Owner Complete Name: Peter D. Whitford

FEIN# 35-2292111

[redacted] E-mail address: pwhitford@meridian-barrier.com

Street Address: 177 E. Colorado Blvd, Suite 200

City: Pasadena State: CA Zip: 91105

[redacted]

III. Compliance with Wage Laws:

Within the past five years has the Person/Substantial Owner, in any judicial or administrative proceeding, been convicted of, entered a plea, made an admission of guilt or liability, or had an administrative finding made for committing a repeated or willful violation of any of the following laws:

No	*Illinois Wage Payment and Collection Act, 820 ILCS 115/1 et seq.,* ***YES or NO***
No	*Illinois Minimum Wage Act, 820 ILCS 105/1 et seq.,* ***YES or NO***
No	*Illinois Worker Adjustment and Retraining Notification Act, 820 ILCS 65/1 et seq.,* ***YES or NO***
No	*Employee Classification Act, 820 ILCS 185/1 et seq.,* **YES or NO**
No	*Fair Labor Standards Act of 1938, 29 U.S.C. 201, et seq.,* ***YES or NO***
No	*Any comparable state statute or regulation of any state, which governs the payment of wages* ***YES or NO***

If the Person/Substantial Owner answered **"Yes"** to any of the questions above, it is ineligible to enter into a Contract with Cook County, but can request a reduction or waiver under **Section IV.**

CONTRACT #: 2406-07250

IV. Request for Waiver or Reduction

If Person/Substantial Owner answered **"Yes"** to any of the questions above, it may request a reduction or waiver in accordance with Section 34-179(d), provided that the request for reduction of waiver is made on the basis of one or more of the following actions that have taken place:

No — There has been a bona fide change in ownership or Control of the ineligible Person or Substantial Owner. YES or NO

No — Disciplinary action has been taken against the individual(s) responsible for the acts giving rise to the violation. YES or NO

No — Remedial action has been taken to prevent a recurrence of the acts giving rise to the disqualification or default. YES or NO

No — Other factors that the Person or Substantial Owner believe are relevant. YES or NO

The Person/Substantial Owner must submit documentation to support the basis of its request for a reduction or waiver. The Chief Procurement Officer reserves the right to make additional inquiries and request additional documentation.

V. Affirmation

The Person/Substantial Owner affirms that all statements contained in the Affidavit are true, accurate and complete.

Signature: Kelly Sullivan Date: 11/22/2024

Name of Person signing (Print): Kelly Sullivan Title: Compliance Administrator

Subscribed and sworn to before me this _____ day of _____, 20_____

x Please see attached Jurat

Notary Public Signature **Notary Seal**

Note: The above information is subject to verification prior to the award of the Contract.

CALIFORNIA JURAT WITH AFFIANT STATEMENT **GOVERNMENT CODE § 8202**

☒ See Attached Document (Notary to cross out lines 1–6 below)
☐ See Statement Below (Lines 1–6 to be completed only by document signer[s], *not* Notary)

Signature of Document Signer No. 1 *Signature of Document Signer No. 2 (if any)*

A notary public or other officer completing this certificate verifies only the identity of the individual who signed the document to which this certificate is attached, and not the truthfulness, accuracy, or validity of that document.

State of California
County of Los Angeles

Subscribed and sworn to (or affirmed) before me on this 22nd (Date) day of Nov. (Month), 2024 (Year)
by (1) Kelly Sullivan
(and (2) _____),
Name(s) of Signer(s)

proved to me on the basis of satisfactory evidence to be the person(s) who appeared before me.

ROBIN J. FOSSELMAN
Notary Public - California
Los Angeles County
Commission # 2410413
My Comm. Expires Aug 3, 2026

Signature Robin J Fosselman
Signature of Notary Public

Seal
Place Notary Seal Above

OPTIONAL

Though this section is optional, completing this information can deter alteration of the document or fraudulent reattachment of this form to an unintended document.

Description of Attached Document

Title or Type of Document: Affirmation Document Date: _____

Number of Pages: _____ Signer(s) Other Than Named Above: _____

©2014 National Notary Association • www.NationalNotary.org • 1-800-US NOTARY (1-800-876-6827) Item #5910

December 5, 2024

Hermine Wise
Lead Contract Negotiator
Office of the Chief Procurement Officer (OCPO)
161 N. Clark, Suite 2300
Chicago, IL 60601
Sent Via Email to: Hermine.Wise@cookcountyil.gov

Dear Hermine:

This is to confirm and certify that Ms. Kelly Sullivan is authorized to sign and submit any and all documents to Cook County in furtherance of the response of Meridian Rapid Defense Group LLC ("Meridian") to the County's Contract Number 2406-07250 for Portable Vehicle Impact Devices. Ms. Sullivan is the Compliance and Governance Administrator of Meridian. Additionally, as the beneficial owner of Normandy Capital Ventures LLC ("Normandy"), I hereby confirm and certify that Ms. Sullivan is also authorized to sign and submit any and all documents that Cook County requires from Normandy as the substantial owner of Meridian Rapid Defense Group LLC.

Thank you for this opportunity.

Sincerely,

Peter D. Whitford

Peter D. Whitford
CEO
NORMANDY CAPITAL VENTURES LLC
MERIDIAN® RAPID DEFENSE GROUP
177 E. Colorado Blvd., Suite 200
Pasadena, CA 91105
+1.818.359.9502 (cell)

This hereby Certifies that the above confirmation and certification by Peter D. Whitford is duly authorized by Meridian Rapid Defense Group LLC.

Dated: December 5, 2024

Jim Miller
Head of Global Corporate Compliance
MERIDIAN RAPID DEFENSE GROUP LLC
Jmiller@meridian-barrier.com
Direct Phone: (310) 748-8055
Making...People, Communities & Places Safer
Made in America
100% Lifetime Guarantee
www.Meridian-Barrier.com

CALIFORNIA JURAT WITH AFFIANT STATEMENT **GOVERNMENT CODE § 8202**

☒ See Attached Document (Notary to cross out lines 1–6 below)
☐ See Statement Below (Lines 1–6 to be completed only by document signer[s], *not* Notary)

Signature of Document Signer No. 1 *Signature of Document Signer No. 2 (if any)*

A notary public or other officer completing this certificate verifies only the identity of the individual who signed the document to which this certificate is attached, and not the truthfulness, accuracy, or validity of that document.

State of California
County of Los Angeles

Subscribed and sworn to (or affirmed) before me on this 5th day of December, 2024.
Date *Month* *Year*
by
(1) Kelly Sullivan
(and (2) _____),
Name(s) of Signer(s)

proved to me on the basis of satisfactory evidence to be the person(s) who appeared before me.

ROBIN J. FOSSELMAN
Notary Public - California
Los Angeles County
Commission # 2410413
My Comm. Expires Aug 3, 2026

Signature Robin J Fosselman
Signature of Notary Public

Seal
Place Notary Seal Above

OPTIONAL

Though this section is optional, completing this information can deter alteration of the document or fraudulent reattachment of this form to an unintended document.

Description of Attached Document
Title or Type of Document: Disclosure of Ownership Interest Statement Document Date: _____
Number of Pages: _____ Signer(s) Other Than Named Above: _____

©2014 National Notary Association • www.NationalNotary.org • 1-800-US NOTARY (1-800-876-6827) Item #5910

EXHIBIT A
MEMBERS

The Members of the Company and their respective addresses, Capital Contributions, and Ownership Interests are set forth below. The Members agree to keep this Exhibit A current and updated in accordance with the terms of this Agreement, including, but not limited to, Sections 2.1, 2.3, 2.4, 7.1, 7.2, and 10.1.

Members	**Capital Contribution**	**Percentage Interest**
Peter Duncan Whitford Chief Executive Officer Address: 177 E Colorado Boulevard, Suite 200 Pasadena, California 91105	10,000.00	100%

CONTRACT #: 2406 - 07250

SECTION 4

COOK COUNTY AFFIDAVIT FOR WAGE THEFT ORDINANCE

Effective May 1, 2015, every Person, ***including Substantial Owners***, seeking a Contract with Cook County must comply with the Cook County Wage Theft Ordinance set forth in Chapter 34, Article IV, Section 179. Any Person/Substantial Owner, who fails to comply with Cook County Wage Theft Ordinance, may request that the Chief Procurement Officer grant a reduction or waiver in accordance with Section 34-179(d).

"*Contract*" means any written document to make Procurements by or on behalf of Cook County.

"*Person*" means any individual, corporation, partnership, Joint Venture, trust, association, limited liability company, sole proprietorship or other legal entity.

"*Procurement*" means obtaining supplies, equipment, goods, or services of any kind.

"*Substantial Owner*" means any person or persons who own or hold a twenty-five percent (25%) or more percentage of interest in any business entity seeking a County Privilege, including those shareholders, general or limited partners, beneficiaries and principals; except where a business entity is an individual or sole proprietorship, Substantial Owner means that individual or sole proprietor.

All Persons/Substantial Owners are required to complete this affidavit and comply with the Cook County Wage Theft Ordinance before any Contract is awarded. Signature of this form constitutes a certification the information provided below is correct and complete, and that the individual(s) signing this form has/have personal knowledge of such information. **County reserves the right to request additional information to verify veracity of information contained in this Affidavit.**

I. Contract Information:

Contract Number: 2406-07250

County Using Agency (requesting Procurement): Cook County Department of Emergency Management Regional Services

II. Person/Substantial Owner Information:

Person (Corporate Entity Name): Normandy Capital Ventures LLC

Substantial Owner Complete Name: Peter D. Whitford

FEIN# 93-3962257 [redacted]

E-mail address: pwhitford@meridian-barrier.com

Street Address: 177 E. Colorado Blvd., Suite 200

City: Pasadena State: CA Zip: 91105 [redacted]

III. Compliance with Wage Laws:

Within the past five years has the Person/Substantial Owner, in any judicial or administrative proceeding, been convicted of, entered a plea, made an admission of guilt or liability, or had an administrative finding made for committing a repeated or willful violation of any of the following laws:

No	*Illinois Wage Payment and Collection Act, 820 ILCS 115/1 et seq.,* ***YES or NO***
No	*Illinois Minimum Wage Act, 820 ILCS 105/1 et seq.,* ***YES or NO***
No	*Illinois Worker Adjustment and Retraining Notification Act, 820 ILCS 65/1 et seq.,* ***YES or NO***
No	*Employee Classification Act, 820 ILCS 185/1 et seq.,* **YES or NO**
No	*Fair Labor Standards Act of 1938, 29 U.S.C. 201, et seq.,* ***YES or NO***
No	*Any comparable state statute or regulation of any state, which governs the payment of wages* ***YES or NO***

If the Person/Substantial Owner answered **"Yes"** to any of the questions above, it is ineligible to enter into a Contract with Cook County, but can request a reduction or waiver under **Section IV.**

CONTRACT #: 2406-07250

IV. Request for Waiver or Reduction

If Person/Substantial Owner answered **"Yes"** to any of the questions above, it may request a reduction or waiver in accordance with Section 34-179(d), provided that the request for reduction of waiver is made on the basis of one or more of the following actions that have taken place:

No There has been a bona fide change in ownership or Control of the ineligible Person or Substantial Owner. YES or NO

No Disciplinary action has been taken against the individual(s) responsible for the acts giving rise to the violation. YES or NO

No Remedial action has been taken to prevent a recurrence of the acts giving rise to the disqualification or default. YES or NO

No Other factors that the Person or Substantial Owner believe are relevant. YES or NO

The Person/Substantial Owner must submit documentation to support the basis of its request for a reduction or waiver. The Chief Procurement Officer reserves the right to make additional inquiries and request additional documentation.

V. Affirmation

The Person/Substantial Owner affirms that all statements contained in the Affidavit are true, accurate and complete.

Signature: Kelly Sullivan Date: 12/5/2024

Name of Person signing (Print): Kelly Sullivan Title: Compliance Administrator

Subscribed and sworn to before me this _____ day of _____, 20_____

x Please see attached _____

Notary Public Signature **Notary Seal**

Note: The above information is subject to verification prior to the award of the Contract.

CALIFORNIA JURAT WITH AFFIANT STATEMENT **GOVERNMENT CODE § 8202**

☒ See Attached Document (Notary to cross out lines 1–6 below)
☐ See Statement Below (Lines 1–6 to be completed only by document signer[s], *not* Notary)

Signature of Document Signer No. 1 *Signature of Document Signer No. 2 (if any)*

A notary public or other officer completing this certificate verifies only the identity of the individual who signed the document to which this certificate is attached, and not the truthfulness, accuracy, or validity of that document.

State of California
County of Los Angeles

Subscribed and sworn to (or affirmed) before me on this 5th (Date) day of December (Month), 2024 (Year),
by
(1) Kelly Sullivan
(and (2) _____),
Name(s) of Signer(s)

proved to me on the basis of satisfactory evidence to be the person(s) who appeared before me.

ROBIN J. FOSSELMAN
Notary Public - California
Los Angeles County
Commission # 2410413
My Comm. Expires Aug 3, 2026

Signature Robin J Fosselman
Signature of Notary Public

Seal
Place Notary Seal Above

OPTIONAL

Though this section is optional, completing this information can deter alteration of the document or fraudulent reattachment of this form to an unintended document.

Description of Attached Document

Title or Type of Document: _____ Document Date: _____

Number of Pages: _____ Signer(s) Other Than Named Above: _____

©2014 National Notary Association • www.NationalNotary.org • 1-800-US NOTARY (1-800-876-6827) Item #5910

CONTRACT #: 2406-07250

SECTION 5

CONTRACT AND EDS EXECUTION PAGE

The Applicant hereby certifies and warrants that all of the statements, certifications and representations set forth in this EDS are true, complete and correct; that the Applicant is in full compliance and will continue to be in compliance throughout the term of the Contract or County Privilege issued to the Applicant with all the policies and requirements set forth in this EDS; and that all facts and information provided by the Applicant in this EDS are true, complete and correct. The Applicant agrees to inform the Chief Procurement Officer in writing if any of such statements, certifications, representations, facts or information becomes or is found to be untrue, incomplete or incorrect during the term of the Contract or County Privilege.

Execution by Corporation

Corporation's Name

President's Printed Name and Signature

Telephone

Email

Secretary Signature

Date

Execution by LLC

Meridian Rapid Defense Group LLC
LLC Name

Kelly Sullivan Kelly Sullivan
*Member/Manager Printed Name and Signature

11/22/2024
Date

(626) 319-1479 KSullivan@meridian-barrier.com
Telephone and Email

Execution by Partnership/Joint Venture

Partnership/Joint Venture Name

*Partner/Joint Venturer Printed Name and Signature

Date

Telephone and Email

Execution by Sole Proprietorship

Printed Name Signature

Assumed Name (if applicable)

Date

Telephone and Email

Subscribed and sworn to before me this
_____day of _____, 20___.

My commission expires:

Please see attached Jurat
Notary Public Signature

Notary Seal

*If the operating agreement, partnership agreement or governing documents requiring execution by multiple members, managers, partners, or joint venturers, please complete and execute additional Contract and EDS Execution Pages.

CALIFORNIA JURAT WITH AFFIANT STATEMENT **GOVERNMENT CODE § 8202**

☐ See Attached Document (Notary to cross out lines 1–6 below)
☐ See Statement Below (Lines 1–6 to be completed only by document signer[s], *not* Notary)

Signature of Document Signer No. 1 *Signature of Document Signer No. 2 (if any)*

A notary public or other officer completing this certificate verifies only the identity of the individual who signed the document to which this certificate is attached, and not the truthfulness, accuracy, or validity of that document.

State of California
County of Los Angeles

Subscribed and sworn to (or affirmed) before me on this 22nd day of Nov., 2024
Date *Month* *Year*
by
(1) Kelly Sullivan
(and (2)_____),
Name(s) of Signer(s)

proved to me on the basis of satisfactory evidence to be the person(s) who appeared before me.

ROBIN J. FOSSELMAN
Notary Public - California
Los Angeles County
Commission # 2410413
My Comm. Expires Aug 3, 2026

Signature Robin J. Fosselman
Signature of Notary Public

Seal
Place Notary Seal Above

OPTIONAL

Though this section is optional, completing this information can deter alteration of the document or fraudulent reattachment of this form to an unintended document.

Description of Attached Document
Title or Type of Document: Contract and EDS Execution Page **Document Date:** _____
Number of Pages: _____ **Signer(s) Other Than Named Above:** _____

©2014 National Notary Association • www.NationalNotary.org • 1-800-US NOTARY (1-800-876-6827) Item #5910

SECTION 6
COOK COUNTY SIGNATURE PAGE

ON BEHALF OF THE COUNTY OF COOK, A BODY POLITIC AND CORPORATE OF THE STATE OF ILLINOIS, THIS CONTRACT IS HEREBY EXECUTED BY:

Raffi Sarrafian Digitally signed by Raffi Sarrafian Date: 2025.02.07 16:46:11 -06'00'

Cook County Chief Procurement Officer

Date

APPROVED AS TO FORM:

Assistant State's Attorney
(Required on contracts over $1,000,000

Date

CONTRACT TERM & AMOUNT

2406-07250

Contract #

January 1, 2025 through November 30, 2025

Original Contract Term

One (1) 10-month renewal option

Renewal Options (If Applicable)

$442,394.57

Contract Amount

12-19-2024

Cook County Board Approval Date (If Applicable)

APPROVED BY THE BOARD OF
COOK COUNTY COMMISSIONERS
DEC 19 2024
COM _____

ATTACHMENT I

CITY OF CHICAGO - CONTRACT NO. 201170
SPECIFICATION NO. 1219096

Contract Summary Sheet

Contract (PO) Number: 201170

Specification Number: 1219096

Name of Contractor: Meridian Rapid Defense Group LLC

City Department: OFFICE OF PUBLIC SAFETY ADMINISTRATION

Title of Contract: 1219096: PORTABLE VEHICLE IMPACT DEVICES- CITY OF CHICAGO

Term of Contract: **Start Date:** 9/21/2022

End Date: 9/20/2027

Dollar Amount of Contract (or maximum compensation if a Term Agreement) (DUR):
$2,090,750.90

Brief Description of Work: 1219096: PORTABLE VEHICLE IMPACT DEVICES- CITY OF CHICAGO

Procurement Services Contract Area: WORK SERVICES / FACILITIES MAINT.

Please refer to the DPS website for Contact information under "Doing Business With The City".

Vendor Number: 10233553

Submission Date: 9/22/2022 LC

Work Service Solicitation #8065,1 (BID)
Supplier Name: Meridian Rapid Defense Group LLC Response# 414026

1219096: PORTABLE VEHICLE IMPACT DEVICES

Specification Number:1219096

Required for use by: OFFICE OF PUBLIC SAFETY ADMINISTRATION

Bid/Proposal Submittal Date and Time: 11:00 AM Central Time, 12-APR-2022

Deadline for Questions: 04:00 PM Central Time, 15-MAR-2022
Buyer: CLARK, LISA
Email Address: Lisa.Clark@cityofchicago.org
Phone Number: 3127442771
Pre-Solicitation Conference Date and Time: 11:00 AM Central Time, 10-MAR-2022
Pre-Solicitation Conference Location: The Pre-Bid/Submittal Conference will be held via Conference Call at 11:00AM AM , Central Time. All Interested Attendees must register in advance of the Pre-Bid/Submittal Conference Call. See Section 1.5 for details.
Site Visit Date & Time: N/A
Site Visit Location: N/A

Response Status **Active**

Your response has been submitted to:

http://www.cityofchicago.org/eProcurement
iSupplier vendor portal registration is required.
Allow 3 business days to complete registration.

LORI E. LIGHTFOOT **MAYOR**	**Aileen Velazquez** **CHIEF PROCUREMENT OFFICER**

Table of Contents

1 Header Information 4
1.1 General Information 4
1.2 Terms 4
1.3 Requirements 4
1.4 Attachments 8
1.4.1 Buyer Attachments 8
1.4.2 Supplier Attachments 8
1.5 Response Rules 9
2 Price Schedule 10
2.1 Line Information 10
2.2 Line Details 16
2.2.1 Line 1.1 16
2.2.2 Line 1.2 16
2.2.3 Line 1.3 17
2.2.4 Line 1.4 17
2.2.5 Line 2.1 17
2.2.6 Line 2.2 18
2.2.7 Line 2.3 18
2.2.8 Line 2.4 18
2.2.9 Line 2.5 18
2.2.10 Line 2.6 19
2.2.11 Line 2.7 19
2.2.12 Line 2.8 19
2.2.13 Line 3.1 19
2.2.14 Line 3.2 20
2.2.15 Line 3.3 20
2.2.16 Line 3.4 20
2.2.17 Line 3.5 20
2.2.18 Line 3.6 21
2.2.19 Line 3.7 21

2.2.20 Line 4.1 21

2.2.21 Line 4.2 22

2.2.22 Line 4.3 22

2.2.23 Line 5.1 22

2.2.24 Line 5.2 22

2.2.25 Line 5.3 22

2.2.26 Line 6.1 23

2.2.27 Line 6.2 23

2.2.28 Line 6.3 23

2.2.29 Line 7.1 23

1 Header Information

1.1 General Information

Title	**1219096: PORTABLE VEHICLE IMPACT DEVICES**
Description	**1219096: PORTABLE VEHICLE IMPACT DEVICES**
Amendment Date	**25-MAR-2022 09:18:56**
Amendment Description	**Addendum No 1**

Preview Date	**03-MAR-2022 10:00:00**	Open Date	**03-MAR-2022 10:00:00**
Close Date	**11:00 AM Central Time, 12-APR-2022**	Award Date	**Not Specified**
Time Zone	**Central Time**	Buyer	**CLARK, LISA**
Quote Style	**Sealed**	Email	**Lisa.Clark@cityofchicago.org**
Event	**Work Service**	Outcome	**Blanket Purchase Agreement**

1.2 Terms

Effective Start Date	**Not Specified**	Effective End Date	**Not Specified**
Ship-To Address	**051-3020 INFORMATION TECHNOLOGY 121 N LASALLE ST Chicago, IL 60602 United States**	Bill-To Address	**051-3020 INFORMATION TECHNOLOGY 121 N LASALLE ST Chicago, IL 60602 United States**
Payment Terms	**IMMEDIATE**	Carrier	
FOB	**CITY OF CHICAGO**	Freight Terms	**Paid**
Response Valid Until	**12-APR-2023**	Reference Number	**Work Service #8065**
Total Agreement Amount (USD)	**Not Specified**	Minimum Release Amount (USD)	**Not Specified**

1.3 Requirements

<B>KEY SOLICITATION PARAMETERS</B>
CONTRACT SPECIFIC GOALS: 10% MBE/5% WBE ..... Type **No Response Required**
FUNDING SOURCE: GRANT (UASI) ..... Type **No Response Required**
FUND NUMBER: 018-RH3K-58-2705-05820104752-0400-220400, 019-WY38-58-2705-05820105487-0400-220400 + VARIOUS ..... Type **No Response Required**
DPS UNIT: WORK SERVICES ..... Type **No Response Required**
CONTRACT TERM: SIXTY (60) MONTHS ..... Type **No Response Required**
PRE-BID/PRE-PROPOSAL CONFERENCE: MARCH 10, 2022 AT 11:00AM, CENTRAL TIME, VIA CONFERENCE CALL ..... Type **No Response Required**
<B>BIDDER EXCEPTIONS</B>

<B>BIDDER EXCEPTIONS</B>

Any deviations from or exceptions to any provisions or requirements of the bidding documents, including but not limited to the specifications of the goods and/or services to be provided, must be noted here or in an attachment, with the exact nature of the change outlined in sufficient detail, and as provided in the contract terms and conditions "Trade Names and Substitutions," as applicable. Bidder must provide the reason for which deviations were made. Failure of a bidder to comply with the terms of this paragraph may be cause for rejection of its bid.

.....

Type **Optional**

.....

Your response value:

Enter the EDS number from your EDS Certificate and attach the certificate.

.....

Value Type **Numeric Value only**

.....

Your response value:
171,476

<B>COMMODITIES/WORK SERVICES/HEAVY EQUIPMENT/SMALL ORDERS/CONSTRUCTION/JOC CHECKLIST</B>

This is a checklist of all supporting documents that must be attached to your bid response. Attach all documents specified below. After attaching, click "YES" to indicate that the attachment was completed.

.....

Type **No Response Required**

- Proposal Page completed, signed and notarized - (ALL)

.....

Acceptable Values
YES
NO

.....

Your response value:
YES

- Proposal To Be Completed By a Corporation - (ALL)

.....

Acceptable Values
YES
NO

.....

Your response value:
NO

- Proposal To Be Completed By a Partnership - (ALL)

.....

Acceptable Values
YES
NO

.....

Your response value:
YES

- Proposal To Be Completed By a Joint Venture - (ALL)

.....

Acceptable Values
YES
NO

.....

<B>COMMODITIES/WORK SERVICES/HEAVY EQUIPMENT/SMALL ORDERS/CONSTRUCTION/JOC CHECKLIST</B>
Your response value: NO
- Proposal To Be Completed By a Sole Proprietor - (ALL) ..... Acceptable Values YES NO ..... *Your response value:* NO
- Bid Execution Page - (ALL) ..... Acceptable Values YES NO ..... *Your response value:* YES
- Request for a reduction or waiver of MBE/WBE goals - (ALL) ..... Acceptable Values YES NO ..... *Your response value:* YES
- Certificate of Filing of Economic Disclosure Statement and Affidavit (EDS) - (ALL) ..... Acceptable Values YES NO ..... *Your response value:* YES
- Certificate of Insurance ..... Acceptable Values YES NO ..... *Your response value:* YES
- Bidder Contact Information - (ALL) ..... Acceptable Values YES NO ..... *Your response value:* YES
M/WBE DOCUMENTS

<B>COMMODITIES/WORK SERVICES/HEAVY EQUIPMENT/SMALL ORDERS/CONSTRUCTION/JOC CHECKLIST</B>
..... Type **No Response Required**
- Schedule B - MBE/WBE Affidavit of Joint Venture - (ALL) ..... Acceptable Values YES NO ..... *Your response value:* NO
- Schedule C-1 - – MBE/WBE Letter of Intent To Perform As a Subcontractor or Supplier - (ALL) ..... Acceptable Values YES NO ..... *Your response value:* NO
-Schedule D-1 - Compliance Plan Regarding MBE and WBE Utilization - (ALL) ..... Acceptable Values YES NO ..... *Your response value:* NO
- Request for Full or Partial Waiver - (ALL) ..... Acceptable Values YES NO ..... *Your response value:* YES
- Letters of Certification for all M/WBE's - (ALL) ..... Acceptable Values YES NO ..... *Your response value:* NO
NON BID LINE REQUIREMENT (GROUPS) ..... *Your response value:* 0.0000000001
- If you are not bidding a specific line(s) within a Group, enter a price of $0.0000000001 into the unit price field of the bid line(s). Please comply with other solicitation provisions, if any, requiring bidding of all lines in order for your bid to be considered responsive. ..... Type **No Response Required**

1.4 Attachments

1.4.1 Buyer Attachments

Name	Data Type	Description
Attachment 00: Addendum No 1	File	Addendum No 1
Attachment 01: Detailed Specification	File	Specification Number 1219096 Portable Vehicle Impact Devices
Attachment 02: Grant Agreements	File	Grant Agreement

1.4.2 Supplier Attachments

Name	Data Type	Description
Archer Drop Deck Trailer One Pager	Web Page	Mobile deployment in minutes. Custom built to load and haul up to eight Archer 1200 Barriers, making barrier deployment fast and easy.
Archer 1200 Vehicle Barrier One Pager	Web Page	One Pager detailing the Archer 1200 Vehicle Barrier - an unanchored "drop and stop" barrier for rapid deployment on roadways and hard surfaces.
Bidder Contact Information	Web Page	Document demonstrating sufficient experience and expertise in providing the services required in Specification Number 1219096.
Bid Execution By A Partnership	Web Page	Signed and notarized Bid Execution By A Partnership document acknowledging having received Specification Number 1219096 containing a full set of Contract Documents.
Certificate of Filing for City of Chicago EDS	Web Page	Certificate of Filing for the City of Chicago Economic Disclosure Statement with a filing date of March 25, 2022. EDS Number 171476
Insurance Certificate of Coverage	Web Page	Certificate of Liability Insurance with the following coverages: Commercial General Liability, Excess Liability, and Workers Compensation with required limits. The City (RFB) is included as an Additional Insured as respects to General Liability coverage.
Meridian Rapid Defense Group Product Pricing Catalog - 2022	Web Page	The Product Pricing Catalog provides product photographs, MFR Part Numbers, product descriptions, Country of Origin, and product pricing.
Sexual Harassment Policy Affidavit	Web Page	Signed and notarized policy prohibiting sexual harassment as described in Section 2-92-612 of the Municipal Code of Chicago.
Specification Number 1219096 Bid Submittal Checklist	Web Page	Documents completed and incorporated into the Bid package.
Specification Number 1219096 MBE WBE Good Faith Efforts	Web Page	Letter detailing Meridian Rapid Defense Group's commitment to making Good Faith Efforts to expend percentages, if awarded, for contract participation by MBE's and WBE's. Request for Waiver.
Specification Number 1219096 RENTAL Catalog 2022	Web Page	Meridian Rapid Defense Group Rental Pricing Catalog 2022.
SAFETY Act Designations	Web Page	Meridian Rapid Defense Group has been awarded the highest official recognitions, accreditations, and approvals by the U.S. Department of Homeland Security (DHS)

Name	Data Type	Description
		pursuant to The SAFETY Act.

1.5 Response Rules

- [ ] Solicitation is restricted to invited suppliers
- [ ] Suppliers are allowed to view other suppliers' contract terms, notes and attachments
- [ ] Suppliers are allowed to respond to selected lines
- [X] Suppliers are allowed to provide multiple responses
- [ ] Buyer may close the solicitation before the Close Date
- [ ] Buyer may manually extend the solicitation while it is open

2 Price Schedule

2.1 Line Information

Display Rank As **No indicator displayed**
Ranking **Price Only**
Cost Factors **None**
Response Total (USD) **Cannot be displayed because quantity is not available on all lines**

Line	Item, Rev / Job	Target Quantity	Unit	Response Price	Amount
1 GROUP A				No Response	
1.1 PORTABLE VEHICLE IMPACT DEVICES (BARRIERS) - PURCHASE OF PARTS, SUPPLIES & ACCESSORIES - LATEST MERIDIAN RAPID DEFENSE GROUP CATALOG		100,000	Discount From List	1	100,000.00
1.2 PORTABLE VEHICLE IMPACT DEVICES (BARRIERS) - EMERGENCY ORDERS MUST BE DELIVERED NO LESS THAN 48 HRS UPON NOTIFICATION BY THE CITY PERSONNEL - DELIVERY & SET UP MUST BE INCLUDED	5507812 141	80	Each	6,813.75	545,100.00
1.3 PORTABLE VEHICLE IMPACT DEVICES (BARRIERS) EMERGENCY ORDERS OF PARTS OR ACCESSORIES - LATEST MERIDIAN RAPID DEFENSE GROUP CATALOG MUST BE DELIVERED NO LESS THAN 48 HRS UPON NOTIFICATION BY THE CITY PERSONNEL-DELIVERY INCLUDED		100,000	Discount From List	1	100,000.00
1.4 PORTABLE VEHICLE IMPACT DEVICES (BARRIERS) -	5507812 140	180	Each	6,713.75	1,208,475.00

Line	Item, Rev / Job	Target Quantity	Unit	Response Price	Amount
PURCHASE INCLUDES DELIVERY AND TRAINING ON ALL FACETS OF THE DEVICES AT TIME OF DELIVERY					
2 GROUP B				No Response	
2.1 PORTABLE VEHICLE IMPACT DEVICES - 20 FT. VEHICLE BARRIERS (ACTIVE) PURCHASE INCLUDES DELIVERY AND TRAINING ON ALL FACETS OF THE DEVICES AT TIME OF DELIVERY INCLUDING PROPER TRANSFER SETUP & TAKEDOWN	5507812142	12	Each	0.0000000001	0.00
2.2 PORTABLE VEHICLE IMPACT DEVICES - 16 FT. VEHICLE BARRIERS (ACTIVE) PURCHASE INCLUDES DELIVERY AND TRAINING ON ALL FACETS OF THE DEVICES AT TIME OF DELIVERY INCLUDING PROPER TRANSFER SETUP & TAKEDOWN	5507812144	2	Each	0.0000000001	0.00
2.3 PORTABLE VEHICLE IMPACT DEVICES - 12 FT. VEHICLE BARRIERS (ACTIVE) PURCHASE INCLUDES DELIVERY AND TRAINING ON ALL FACETS OF THE DEVICES AT TIME OF DELIVERY INCLUDING PROPER TRANSFER SETUP & TAKEDOWN	5507812146	2	Each	0.0000000001	0.00
2.4 TRAFFIC CONTROL , BARRIERS - PORTABLE VEHICLE IMPACT	9688489124	50	Hour	0.0000000001	0.00

Line	Item, Rev / Job	Target Quantity	Unit	Response Price	Amount
DEVICES - VEHICLE BARRIERS (ACTIVE) LABOR AND REPAIR - STRAIGHT TIME HOURLY RATE					
2.5 TRAFFIC CONTROL , BARRIERS - PORTABLE VEHICLE IMPACT DEVICES - VEHICLE BARRIERS (ACTIVE) LABOR AND REPAIR - OVERTIME SATURDAY & SUNDAY RATE	9688489 126		Hour	0.0000000001	
2.6 PORTABLE VEHICLE IMPACT DEVICES - VEHICLE BARRIERS (ACTIVE) - PURCHASE OF PARTS, SUPPLIES & ACCESSORIES - LATEST DELTA SCENTFIC GROUP CATALOG		100,000	Discount From List	0.0000000001	0.00
2.7 PORTABLE VEHICLE IMPACT DEVICES - VEHICLE BARRIERS (ACTIVE) - EMERGENCY ORDERS MUST BE DELIVERED NO LESS THAN 48 HRS UPON NOTIFICATION BY THE CITY PERSONNEL - DELIVERY & SET UP MUST BE INCLUDED	5507812 147	5	Each	0.0000000001	0.00
2.8 PORTABLE VEHICLE IMPACT DEVICES - VEHICLE BARRIERS (ACTIVE) - EMERGENCY ORDERS OF PARTS AND/OR ACCESSORIES FROM LATEST DELTA SCIENTIFIC GROUP CATALOGUE MUST BE DELIVERED NO LESS THAN 48 HOURS UPON NOTIFICATION BY		100,000	Discount From List	0.0000000001	0.00

Line	Item, Rev / Job	Target Quantity	Unit	Response Price	Amount
THE CITY PERSONNEL					
3 GROUP C				No Response	
3.1 PORTABLE VEHICLE IMPACT DEVICES - VEHICLE BARRIERS PURCHASE INCLUDES DELIVERY AND TRAINING ON ALL FACETS OF THE DEVICES AT TIME OF DELIVERY INCLUDING PROPER TRANSFER SETUP & TAKEDOWN	5507812148	96	Each	0.0000000001	0.00
3.2 TRAFFIC CONTROL , BARRIERS - PORTABLE MODULAR VEHICLE IMPACT DEVICES - VEHICLE BARRIERS LABOR AND REPAIR - STRAIGHT TIME HOURLY RATE	9688489128	50	Hour	0.0000000001	0.00
3.3 TRAFFIC CONTROL , BARRIERS - PORTABLE MODULAR VEHICLE IMPACT DEVICES - VEHICLE BARRIERS LABOR AND REPAIR - OVERTIME SATURDAY & SUNDAY RATE	9688489130	50	Hour	0.0000000001	0.00
3.4 PORTABLE VEHICLE IMPACT DEVICES - VEHICLE BARRIERS - PURCHASE OF PARTS, SUPPLIES & ACCESSORIES - LATEST GRAB GLOBAL GROUP CATALOG		100,000	Discount From List	0.0000000001	0.00
3.5 PORTABLE MODULAR VEHICLE IMPACT DEVICES - VEHICLE BARRIERS - EMERGENCY ORDERS MUST BE DELIVERED NO LESS THAN 48 HRS	5507812150	5	Each	0.0000000001	0.00

Line	Item, Rev / Job	Target Quantity	Unit	Response Price	Amount
UPON NOTIFICATION BY THE CITY PERSONNEL - DELIVERY & SET UP MUST BE INCLUDED					
3.6 PORTABLE MODULAR VEHICLE IMPACT DEVICES -VEHICLE BARRIERS - EMERGENCY ORDERS PARTSOR ACCESSORIES FROM LATEST GRAB GLOBAL GROUP CATALOGUE MUST BE DELIVED NO LESS THAN 48 HRS NOTIFICATION BY THE CITY PERSONNEL-DELIVERY INCLUDED		100,000	Discount From List	0.0000000001	0.00
3.7 Portable Vehicle Impact Devices-Vehicle Barriers-System of 8 Barriers-Purchase Includes Delivery and Training On All Facets of the Devices at the Time of Delivery Including Proper Set up and Takedown.	5507812143	12	Each	0.0000000001	0.00
4 GROUP D				No Response	
4.1 RENTAL OF BARRICADES AND OTHER CROWD CONTROL ITEMS - RENTAL OF PORTABLE, UNANCHORED, BALLISTIC-RATED VEHICLE BARRIERS	9817627001	100	Day	100	10,000.00
4.2 RENTAL OF BARRICADES AND OTHER CROWD CONTROL ITEMS - RENTAL OF PORTABLE, UNANCHORED, BALLISTIC-RATED VEHICLE BARRIERS	9817627002	20	Week	300	6,000.00
4.3 RENTAL OF BARRICADES AND	9817627003	6	Month	900	5,400.00

Line	Item, Rev / Job	Target Quantity	Unit	Response Price	Amount
OTHER CROWD CONTROL ITEMS - RENTAL OF PORTABLE, UNANCHORED, BALLISTIC-RATED VEHICLE BARRIERS					
5 GROUP E				No Response	
5.1 RENTAL OF BARRICADES AND OTHER CROWD CONTROL ITEMS - RENTAL OF PORTABLE, PHALANX TYPE BARRIERS	9817627 004	100	Day	0.0000000001	0.00
5.2 RENTAL OF BARRICADES AND OTHER CROWD CONTROL ITEMS - RENTAL OF PORTABLE, PHALANX TYPE BARRIERS	9817627 005	20	Week	0.0000000001	0.00
5.3 RENTAL OF BARRICADES AND OTHER CROWD CONTROL ITEMS - RENTAL OF PORTABLE, PHALANX TYPE BARRIERS	9817627 006	6	Month	0.0000000001	0.00
6 GROUP F				No Response	
6.1 RENTAL OF BARRICADES AND OTHER CROWD CONTROL ITEMS - RENTAL OF MODULAR VEHICLE BARRIER SYSTEMS	9817627 007	100	Day	0.0000000001	0.00
6.2 RENTAL OF BARRICADES AND OTHER CROWD CONTROL ITEMS - RENTAL OF MODULAR VEHICLE BARRIER SYSTEMS	9817627 008	20	Week	0.0000000001	0.00
6.3 RENTAL OF BARRICADES AND OTHER CROWD CONTROL ITEMS - RENTAL OF MODULAR VEHICLE BARRIER SYSTEMS	9817627 009	6	Month	0.0000000001	0.00
7 GROUP G				No Response	
7.1 TRAILERS, VARIOUS TYPES -	0736090 040	5	Each	23,155.18	115,775.90

Line	Item, Rev / Job	Target Quantity	Unit	Response Price	Amount
PURCAHSE OF DROP-DECK BOLLARD TRAILER(S)					

2.2 Line Details

2.2.1 Line 1.1 PORTABLE VEHICLE IMPACT DEVICES (BARRIERS) - PURCHASE OF PARTS, SUPPLIES & ACCESSORIES - LATEST MERIDIAN RAPID DEFENSE GROUP CATALOG

Group	**GROUP A**		
Category	**55078.01.**	Start Price (USD)	**Not Specified**
Shopping Category	**PORTABLE VEHICLE IMPACT DEVICES (BARRIERS) - PURCHASE OF PARTS, SUPPLIES & ACCESSORIES - LATEST MERIDIAN RAPID DEFENSE GROUP CATALOG**	Target Price (USD)	**Not Specified**
Minimum Release Amount (USD)	**Not Specified**		
Estimated Total Amount (USD)	**Not Specified**		

2.2.2 Line 1.2 PORTABLE VEHICLE IMPACT DEVICES (BARRIERS) - EMERGENCY ORDERS MUST BE DELIVERED NO LESS THAN 48 HRS UPON NOTIFICATION BY THE CITY PERSONNEL - DELIVERY & SET UP MUST BE INCLUDED

Group	**GROUP A**		
Category	**55078..**	Start Price (USD)	**Not Specified**
Shopping Category	**Not Specified**	Target Price (USD)	**Not Specified**
Minimum Release Amount (USD)	**Not Specified**		
Estimated Total Amount (USD)	**Not Specified**		

2.2.3 Line 1.3 PORTABLE VEHICLE IMPACT DEVICES (BARRIERS) EMERGENCY ORDERS OF PARTS OR ACCESSORIES - LATEST MERIDIAN RAPID DEFENSE GROUP CATALOG MUST BE DELIVERED NO LESS THAN 48 HRS UPON NOTIFICATION BY THE CITY PERSONNEL-DELIVERY INCLUDED

Group	**GROUP A**		
Category	**55078.02.**	Start Price (USD)	**Not Specified**
Shopping Category	**PORTABLE VEHICLE IMPACT DEVICES (BARRIERS) EMERGENCY ORDERS OF PARTS OR ACCESSORIES - LATEST MERIDIAN RAPID DEFENSE GROUP CATALOG MUST BE DELIVERED NO LESS THAN 48 HRS UPON NOTIFICATION BY THE CITY PERSONNEL-DELIVERY INCLUDED**	Target Price (USD)	**Not Specified**
Minimum Release Amount (USD)	**Not Specified**		
Estimated Total Amount (USD)	**Not Specified**		

2.2.4 Line 1.4 PORTABLE VEHICLE IMPACT DEVICES (BARRIERS) - PURCHASE INCLUDES DELIVERY AND TRAINING ON ALL FACETS OF THE DEVICES AT TIME OF DELIVERY

Group	**GROUP A**		
Category	**55078..**	Start Price (USD)	**Not Specified**
Shopping Category	**Not Specified**	Target Price (USD)	**Not Specified**
Minimum Release Amount (USD)	**Not Specified**		
Estimated Total Amount (USD)	**Not Specified**		

2.2.5 Line 2.1 PORTABLE VEHICLE IMPACT DEVICES - 20 FT. VEHICLE BARRIERS (ACTIVE) PURCHASE INCLUDES DELIVERY AND TRAINING ON ALL FACETS OF THE DEVICES AT TIME OF DELIVERY INCLUDING PROPER TRANSFER SETUP & TAKEDOWN

Group	**GROUP B**		
Category	**55078..**	Start Price (USD)	**Not Specified**
Shopping Category	**Not Specified**	Target Price (USD)	**Not Specified**
Minimum Release Amount (USD)	**Not Specified**		
Estimated Total Amount (USD)	**Not Specified**		

2.2.6 Line 2.2 PORTABLE VEHICLE IMPACT DEVICES - 16 FT. VEHICLE BARRIERS (ACTIVE) PURCHASE INCLUDES DELIVERY AND TRAINING ON ALL FACETS OF THE DEVICES AT TIME OF DELIVERY INCLUDING PROPER TRANSFER SETUP & TAKEDOWN

Group	**GROUP B**		
Category	**55078..**	Start Price (USD)	**Not Specified**
Shopping Category	**Not Specified**	Target Price (USD)	**Not Specified**
Minimum Release Amount (USD)	**Not Specified**		
Estimated Total Amount (USD)	**Not Specified**		

2.2.7 Line 2.3 PORTABLE VEHICLE IMPACT DEVICES - 12 FT. VEHICLE BARRIERS (ACTIVE) PURCHASE INCLUDES DELIVERY AND TRAINING ON ALL FACETS OF THE DEVICES AT TIME OF DELIVERY INCLUDING PROPER TRANSFER SETUP & TAKEDOWN

Group	**GROUP B**		
Category	**55078..**	Start Price (USD)	**Not Specified**
Shopping Category	**Not Specified**	Target Price (USD)	**Not Specified**
Minimum Release Amount (USD)	**Not Specified**		
Estimated Total Amount (USD)	**Not Specified**		

2.2.8 Line 2.4 TRAFFIC CONTROL , BARRIERS - PORTABLE VEHICLE IMPACT DEVICES - VEHICLE BARRIERS (ACTIVE) LABOR AND REPAIR - STRAIGHT TIME HOURLY RATE

Group	**GROUP B**		
Category	**96884..**	Start Price (USD)	**Not Specified**
Shopping Category	**Not Specified**	Target Price (USD)	**Not Specified**
Minimum Release Amount (USD)	**Not Specified**		
Estimated Total Amount (USD)	**Not Specified**		

2.2.9 Line 2.5 TRAFFIC CONTROL , BARRIERS - PORTABLE VEHICLE IMPACT DEVICES - VEHICLE BARRIERS (ACTIVE) LABOR AND REPAIR - OVERTIME SATURDAY & SUNDAY RATE

Group	**GROUP B**		
Category	**96884..**	Start Price (USD)	**Not Specified**
Shopping Category	**Not Specified**	Target Price (USD)	**Not Specified**
Minimum Release Amount (USD)	**Not Specified**		
Estimated Total Amount (USD)	**Not Specified**		

2.2.10 Line 2.6 PORTABLE VEHICLE IMPACT DEVICES - VEHICLE BARRIERS (ACTIVE) - PURCHASE OF PARTS, SUPPLIES & ACCESSORIES - LATEST DELTA SCENTFIC GROUP CATALOG

Group	**GROUP B**		
Category	**55078.03.**	Start Price (USD)	**Not Specified**
Shopping Category	**PORTABLE VEHICLE IMPACT DEVICES - VEHICLE BARRIERS (ACTIVE) - PURCHASE OF PARTS, SUPPLIES & ACCESSORIES - LATEST DELTA SCENTFIC GROUP CATALOG**	Target Price (USD)	**Not Specified**
Minimum Release Amount (USD)	**Not Specified**		
Estimated Total Amount (USD)	**Not Specified**		

2.2.11 Line 2.7 PORTABLE VEHICLE IMPACT DEVICES - VEHICLE BARRIERS (ACTIVE) - EMERGENCY ORDERS MUST BE DELIVERED NO LESS THAN 48 HRS UPON NOTIFICATION BY THE CITY PERSONNEL - DELIVERY & SET UP MUST BE INCLUDED

Group	**GROUP B**		
Category	**55078..**	Start Price (USD)	**Not Specified**
Shopping Category	**Not Specified**	Target Price (USD)	**Not Specified**
Minimum Release Amount (USD)	**Not Specified**		
Estimated Total Amount (USD)	**Not Specified**		

2.2.12 Line 2.8 PORTABLE VEHICLE IMPACT DEVICES - VEHICLE BARRIERS (ACTIVE) - EMERGENCY ORDERS OF PARTS AND/OR ACCESSORIES FROM LATEST DELTA SCIENTIFIC GROUP CATALOGUE MUST BE DELIVERED NO LESS THAN 48 HOURS UPON NOTIFICATION BY THE CITY PERSONNEL

Group	**GROUP B**		
Category	**55078.04.**	Start Price (USD)	**Not Specified**
Shopping Category	**Not Specified**	Target Price (USD)	**Not Specified**
Minimum Release Amount (USD)	**Not Specified**		
Estimated Total Amount (USD)	**Not Specified**		

2.2.13 Line 3.1 PORTABLE VEHICLE IMPACT DEVICES - VEHICLE BARRIERS PURCHASE INCLUDES DELIVERY AND TRAINING ON ALL FACETS OF THE DEVICES AT TIME OF DELIVERY INCLUDING PROPER TRANSFER SETUP & TAKEDOWN

Group	**GROUP C**		
Category	**55078..**	Start Price (USD)	**Not Specified**
Shopping Category	**Not Specified**	Target Price (USD)	**Not Specified**
Minimum Release Amount (USD)	**Not Specified**		
Estimated Total Amount (USD)	**Not Specified**		

2.2.14 Line 3.2 TRAFFIC CONTROL , BARRIERS - PORTABLE MODULAR VEHICLE IMPACT DEVICES - VEHICLE BARRIERS LABOR AND REPAIR - STRAIGHT TIME HOURLY RATE

Group	**GROUP C**		
Category	**96884..**	Start Price (USD)	**Not Specified**
Shopping Category	**Not Specified**	Target Price (USD)	**Not Specified**
Minimum Release Amount (USD)	**Not Specified**		
Estimated Total Amount (USD)	**Not Specified**		

2.2.15 Line 3.3 TRAFFIC CONTROL , BARRIERS - PORTABLE MODULAR VEHICLE IMPACT DEVICES - VEHICLE BARRIERS LABOR AND REPAIR - OVERTIME SATURDAY & SUNDAY RATE

Group	**GROUP C**		
Category	**96884..**	Start Price (USD)	**Not Specified**
Shopping Category	**Not Specified**	Target Price (USD)	**Not Specified**
Minimum Release Amount (USD)	**Not Specified**		
Estimated Total Amount (USD)	**Not Specified**		

2.2.16 Line 3.4 PORTABLE VEHICLE IMPACT DEVICES - VEHICLE BARRIERS - PURCHASE OF PARTS, SUPPLIES & ACCESSORIES - LATEST GRAB GLOBAL GROUP CATALOG

Group	**GROUP C**		
Category	**55078.05.**	Start Price (USD)	**Not Specified**
Shopping Category	**PORTABLE VEHICLE IMPACT DEVICES - VEHICLE BARRIERS - PURCHASE OF PARTS, SUPPLIES & ACCESSORIES - LATEST GRAB GLOBAL GROUP CATALOG**	Target Price (USD)	**Not Specified**
Minimum Release Amount (USD)	**Not Specified**		
Estimated Total Amount (USD)	**Not Specified**		

2.2.17 Line 3.5 PORTABLE MODULAR VEHICLE IMPACT DEVICES - VEHICLE BARRIERS - EMERGENCY ORDERS MUST BE DELIVERED NO LESS THAN 48 HRS UPON NOTIFICATION BY THE CITY PERSONNEL - DELIVERY & SET UP MUST BE INCLUDED

Group	**GROUP C**		
Category	**55078..**	Start Price (USD)	**Not Specified**
Shopping Category	**Not Specified**	Target Price (USD)	**Not Specified**
Minimum Release Amount (USD)	**Not Specified**		
Estimated Total Amount (USD)	**Not Specified**		

2.2.18 Line 3.6 PORTABLE MODULAR VEHICLE IMPACT DEVICES -VEHICLE BARRIERS - EMERGENCY ORDERS PARTSOR ACCESSORIES FROM LATEST GRAB GLOBAL GROUP CATALOGUE MUST BE DELIVED NO LESS THAN 48 HRS NOTIFICATION BY THE CITY PERSONNEL-DELIVERY INCLUDED

Group	**GROUP C**		
Category	**55078.06.**	Start Price (USD)	**Not Specified**
Shopping Category	**PORTABLE MODULAR VEHICLE IMPACT DEVICES -VEHICLE BARRIERS - EMERGENCY ORDERS PARTSOR ACCESSORIES FROM LATEST GRAB GLOBAL GROUP CATALOGUE MUST BE DELIVED NO LESS THAN 48 HRS NOTIFICATION BY THE CITY PERSONNEL-DELIVERY INCLUDED**	Target Price (USD)	**Not Specified**
Minimum Release Amount (USD)	**Not Specified**		
Estimated Total Amount (USD)	**Not Specified**		

2.2.19 Line 3.7 Portable Vehicle Impact Devices- Vehicle Barriers- System of 8 Barriers-Purchase Includes Delivery and Training On All Facets of the Devices at the Time of Delivery Including Proper Set up and Takedown.

Group	**GROUP C**		
Category	**55078..**	Start Price (USD)	**Not Specified**
Shopping Category	**Not Specified**	Target Price (USD)	**Not Specified**
Minimum Release Amount (USD)	**Not Specified**		
Estimated Total Amount (USD)	**Not Specified**		

2.2.20 Line 4.1 RENTAL OF BARRICADES AND OTHER CROWD CONTROL ITEMS - RENTAL OF PORTABLE, UNANCHORED, BALLISTIC-RATED VEHICLE BARRIERS

Group	**GROUP D**		
Category	**98176..**	Start Price (USD)	**Not Specified**
Shopping Category	**Not Specified**	Target Price (USD)	**Not Specified**
Minimum Release Amount (USD)	**Not Specified**		
Estimated Total Amount (USD)	**Not Specified**		

2.2.21 Line 4.2 RENTAL OF BARRICADES AND OTHER CROWD CONTROL ITEMS - RENTAL OF PORTABLE, UNANCHORED, BALLISTIC-RATED VEHICLE BARRIERS

Group	**GROUP D**		
Category	**98176..**	Start Price (USD)	**Not Specified**
Shopping Category	**Not Specified**	Target Price (USD)	**Not Specified**
Minimum Release Amount (USD)	**Not Specified**		
Estimated Total Amount (USD)	**Not Specified**		

2.2.22 Line 4.3 RENTAL OF BARRICADES AND OTHER CROWD CONTROL ITEMS - RENTAL OF PORTABLE, UNANCHORED, BALLISTIC-RATED VEHICLE BARRIERS

Group	**GROUP D**		
Category	**98176..**	Start Price (USD)	**Not Specified**
Shopping Category	**Not Specified**	Target Price (USD)	**Not Specified**
Minimum Release Amount (USD)	**Not Specified**		
Estimated Total Amount (USD)	**Not Specified**		

2.2.23 Line 5.1 RENTAL OF BARRICADES AND OTHER CROWD CONTROL ITEMS - RENTAL OF PORTABLE, PHALANX TYPE BARRIERS

Group	**GROUP E**		
Category	**98176..**	Start Price (USD)	**Not Specified**
Shopping Category	**Not Specified**	Target Price (USD)	**Not Specified**
Minimum Release Amount (USD)	**Not Specified**		
Estimated Total Amount (USD)	**Not Specified**		

2.2.24 Line 5.2 RENTAL OF BARRICADES AND OTHER CROWD CONTROL ITEMS - RENTAL OF PORTABLE, PHALANX TYPE BARRIERS

Group	**GROUP E**		
Category	**98176..**	Start Price (USD)	**Not Specified**
Shopping Category	**Not Specified**	Target Price (USD)	**Not Specified**
Minimum Release Amount (USD)	**Not Specified**		
Estimated Total Amount (USD)	**Not Specified**		

2.2.25 Line 5.3 RENTAL OF BARRICADES AND OTHER CROWD CONTROL ITEMS - RENTAL OF PORTABLE, PHALANX TYPE BARRIERS

Group	**GROUP E**		
Category	**98176..**	Start Price (USD)	**Not Specified**
Shopping Category	**Not Specified**	Target Price (USD)	**Not Specified**
Minimum Release Amount (USD)	**Not Specified**		
Estimated Total Amount (USD)	**Not Specified**		

2.2.26 Line 6.1 RENTAL OF BARRICADES AND OTHER CROWD CONTROL ITEMS - RENTAL OF MODULAR VEHICLE BARRIER SYSTEMS

Group	**GROUP F**		
Category	**98176..**	Start Price (USD)	**Not Specified**
Shopping Category	**Not Specified**	Target Price (USD)	**Not Specified**
Minimum Release Amount (USD)	**Not Specified**		
Estimated Total Amount (USD)	**Not Specified**		

2.2.27 Line 6.2 RENTAL OF BARRICADES AND OTHER CROWD CONTROL ITEMS - RENTAL OF MODULAR VEHICLE BARRIER SYSTEMS

Group	**GROUP F**		
Category	**98176..**	Start Price (USD)	**Not Specified**
Shopping Category	**Not Specified**	Target Price (USD)	**Not Specified**
Minimum Release Amount (USD)	**Not Specified**		
Estimated Total Amount (USD)	**Not Specified**		

2.2.28 Line 6.3 RENTAL OF BARRICADES AND OTHER CROWD CONTROL ITEMS - RENTAL OF MODULAR VEHICLE BARRIER SYSTEMS

Group	**GROUP F**		
Category	**98176..**	Start Price (USD)	**Not Specified**
Shopping Category	**Not Specified**	Target Price (USD)	**Not Specified**
Minimum Release Amount (USD)	**Not Specified**		
Estimated Total Amount (USD)	**Not Specified**		

2.2.29 Line 7.1 TRAILERS, VARIOUS TYPES - PURCAHSE OF DROP-DECK BOLLARD TRAILER(S)

Group	**GROUP G**		
Category	**07360.90.**	Start Price (USD)	**Not Specified**
Shopping Category	**Not Specified**	Target Price (USD)	**Not Specified**
Minimum Release Amount (USD)	**Not Specified**		
Estimated Total Amount (USD)	**Not Specified**		

March 25, 2022

ADDENDUM NO. 1

FOR

PORTABLE VEHICLE IMPACT DEVICES
SPECIFICATION NO. 1219096, RFQ 8065,1

For which electronic Bids are due at **11:00 a.m., Central Time on April 4, 2022,** on the Department of Procurement Services webpage: http://www.cityofchicago.org/eProcurement.

The following revisions and/or changes are incorporated into the above-referenced Specification (the "Contract Documents") as noted. All other provisions and requirements as originally set forth, except as amended by previous addenda, if applicable, remain in full force and are binding. Any additional work required by this Addendum shall conform to the applicable provisions of the original Contract Documents.

BIDDER MUST ACKNOWLEDGE RECEIPT OF THIS ADDENDUM IN THE SPACE PROVIDED ON THE BID EXECUTION PAGE.

SECTION 1: NOTICE OF REVISIONS/CHANGES/CLARIFICATIONS

Revision 1.	**The Bid Opening Date has been postponed to April 12, 2022**. For which Bids will be opened in the Department of Procurement Services, Bid & Bond Room, Room 103, City Hall, 121 N. LaSalle Street, Chicago, Illinois, 60602, at 11:00 a.m., Central Time.
Revision 2.	Section 5.17 Emergency Orders, 1st sentence is revised to state "An order is classified as an "emergency" when the City requires the Portable Vehicle Impact Devices and/or parts and accessories be delivered within 48 hours upon notification from the City.
Revision 3.	Section 5.18.1 Delivery for Groups A-F is deleted in its entirety and replaced with the following: The Contractor must furnish and deliver to the City and/or authorized City Personnel the identified barrier. If an emergency order is in effect, the Contractor must provide the delivery within 48 hours or less as stated in section 5.17. <u>Delivery for Groups A-C</u> The Contractor must deliver the identified barrier within seven (7) calendar days after the date of contact from the City to the designated City site. Deliveries must be made between the hours of 8:00 a.m. through 3:00 p.m., Central Time Monday- Friday, excluding City of Chicago recognized holidays. The City reserves the right to add or delete locations as required during the Contract Period.

	Delivery for Groups D-F (Rental) The Contractor must deliver the identified barrier within seven (7) calendar days after the date of contact from the City to the designated City site. Deliveries for rental units may be made on weekdays, weekends or holidays as needed. Price shall be all-inclusive for rentals. The Contractor understands and agrees that the initial acceptance of any delivery will not be considered as a waiver of any provision of this Contract and will not relieve the Contractor of its obligation to supply satisfactory goods which conform to the Contract. However, the Contractor must first immediately notify the Commissioner, or his authorized representative, and report the nature and extent of damages. When Contractor delivers items, the Contractor will bear the risk of loss or damage to the items in transit and during offloading.

SECTION 2: QUESTIONS AND ANSWERS/CLARIFICATIONS

The following questions and requests for clarification were submitted in accordance with the instructions provided in the Contract Documents. The City's Answer (shown in ***bold italics***) follows each question or request for clarification in the table below:

Question 1:	Group B Is the length listed for the barrier size the clear opening length or overall length of barrier?
Answer:	***Refer to page 63 of the Bid Specification Group B, PHALANX TYPE Barrier.***
Question 2:	Group B: "Emergency orders must be delivered no less than 48 hours upon notification by the city personnel" should it read "no more than" as opposed to "no less than"? Otherwise, delivery should not be completed before 48 hours and could delay delivery.
Answer:	***Delivery must be made within 48 hours. See Revision 2 in Section 1 of this Addendum.***
Question 3:	Group B: Emergency order-Does the 48 hours include weekends and holidays? As the manufacturers are closed at those times and some, but not all parts may be stocked locally.
Answer:	***Refer to Section 5.17, Emergency Orders, of the Bid Specification.***
Question 4:	Group C 3.4 Lists "Grab Global Group". Will the catalog of the manufacturer of the Portable Modular Vehicle Impact Devices being quoted be acceptable, as the Grab Global catalog may be irrelevant to the "Portable Modular Vehicle Impact Devices" that may actually being quoted?
Answer:	***Refer to Section 5.15, Price List/Catalogs, of the Bid Specification.***
Question 5:	Group D, E & F Rental Unit price is requested. If the City would like the barriers to be delivered, deployed, recovered and picked up where should that charges be shown? These charges will vary based on the specification of the rental.

Answer	***Refer to page 66 of the Bid Specification that gives details for Groups D, E and F.***
Question 6:	Group D, E, F Factors such as non-business hours, weekend, holidays will factor into the prices so there will be a variations per situation. If the City's position will be that the price needs to be an all-inclusive price, it will most likely be priced at the most costly level to ensure costs are covered for holiday and non-business hour deployments and recoveries.
Answer:	***See Revision 3 in Section 1 of this Addendum***.
Question 7:	GROUP G Trailers are also available for the Group C Modular Vehicle Barrier Systems. Should the price of that Trailers for Group C be included in Group G or is Group G only for Group A products? If Group G is only for Group A products, then can a Group H be added to allow for trailers for Group C products?
Answer:	Group G trailers are for use with the barriers in Group A only. Bids for Group C should be for barriers only. Refer to Section 5.10 Delivery for Group G, Section 5.11 Vehicle and Equipment Additional Requirements (Group G) and Section 5.12 Group G Purchase of Drop-Deck Bollard Trailers.
Question 8:	Group A is Meridian purchase? Group B is Active vehicle barrier purchase? Group C is other barriers purchase? Group D is Meridian rental? Written with Meridian in mind, but Meridian is not specified. Group E is phalanx style barrier rental? Group F is another barrier rental? Group G is drop deck trailers for Meridian only?
Answer:	Group A is Meridian purchase? Yes Group B is Active vehicle barrier purchase? Yes Group C is other barriers purchase? Yes Group D is Meridian rental? This is a rental line for Group A barriers Group E is phalanx style barrier rental? Yes Group F is other barrier rental? Yes Group G is drop deck trailers for Meridian only? Yes

END OF ADDENDUM NO. 1

CITY OF CHICAGO
DEPARTMENT OF PROCUREMENT SERVICES

AILEEN VELAZQUEZ
CHIEF PROCUREMENT OFFICER

Chicago Tribune

Order ID: 7158583

* Agency Commission not included

GROSS PRICE * : **$47.98**

PACKAGE NAME: IL Govt Legal Notice CTC

Order ID: 7158583

* Agency Commission not included

GROSS PRICE * : **$47.98**

PACKAGE NAME: IL Govt Legal Notice CTC

Product(s): Chicago Tribune , Publicnotices.com
AdSize(s): 1 Column
Run Date(s): Thursday, March 3, 2022
Zone: Full Run
Color Spec. B/W

Preview

Chicago Tribune

Printed: 2/25/2022 7:11:36 AM

Order ID: 7158583

* Agency Commission not included

GROSS PRICE * : $47.98

PACKAGE NAME: IL Govt Legal Notice CTC

LEGAL ADVERTISEMENT
March 3, 2022
CITY OF CHICAGO
DEPARTMENT OF PROCUREMENT SERVICES

The Bidder must complete and submit an Electronic Bid prior to the bid due date. An electronic bid must be submitted through the City of Chicago's website at www.cityofchicago.org/eprocurement, on or before the due date and time stated below. The City's system will not accept electronic bids after the due date and time. Bidders must register for a log-in account to submit an electronic bid. Please allow up to three business days for creation of your log-in account. Paper Bid submissions will not be accepted. All Bids will be opened and publicly read aloud for the following:

DESCRIPTION: **PORTABLE VEHICLE IMPACT DEVICES**

DEPARTMENT: **Office of Public Safety Administration**
TYPE: **Work Services**

ELECTRONIC BID DOCUMENTS CAN BE DOWNLOADED AND RESPONDED TO FROM THIS URL ADDRESS: www.cityofchicago.org/eprocurement

SPECIFICATION NO: **1219096**
RFQ NO: 8065

BID/PROPOSAL OPENING DATE:
April 4, 2022
TIME: **11:00 a.m., Central Time**

PRE-BID CONFERENCE CALL:
March 10, 2022, 11:00 a.m., Central Time

Bidders must email: lisa.clark@cityofchicago.org to pre-register for Pre-Bid Virtual Conference Call instructions and link. Email Subject Line to read:
SPEC 1219096 – PORTABLE VEHICLE IMPACT DEVICES

CONTACT: **Lisa Clark,**
Contracts Negotiator
EMAIL: lisa.clark@cityofchicago.org
Pub: 3/3/2022 7158583

Chicago Tribune

Order ID: 7175640

* Agency Commission not included

GROSS PRICE * : **$38.97**

PACKAGE NAME: IL Govt Legal Notice CTC

Order ID: 7175640

* Agency Commission not included

GROSS PRICE * : **$38.97**

PACKAGE NAME: IL Govt Legal Notice CTC

Product(s): Chicago Tribune , Publicnotices.com
AdSize(s): 1 Column
Run Date(s): Friday, March 25, 2022
Zone: Full Run
Color Spec. B/W

Preview

LEGAL ADVERTISEMENT
March 25, 2022
CITY OF CHICAGO
DEPARTMENT OF PROCUREMENT SERVICES

The Bidder must complete and submit an Electronic Bid prior to the bid due date. An electronic bid must be submitted through the City of Chicago's website at **www.cityofchicago.org/eprocurement**, on or before the due date and time stated below. The City's system will not accept electronic bids after the due date and time. Bidders must register for a log-in account to submit an electronic bid. Please allow up to three business days for creation of your log-in account. Paper bids will not be accepted. All Bids will be opened and publicly read aloud for the following:

Notice of Addendum: **Bid Postponement Addendum #1 will be e-mailed to all bidders on the Bid Opportunity Take-Out List**

DESCRIPTION: PORTABLE VEHICLE IMPACT DEVICES

BID DOCUMENT CAN BE DOWNLOADED AND PRINTED FROM URL ADDRESS: www.cityofchicago.org/eprocurement

SPECIFICATION NO: 1219096
RFQ NO: 8065,1

ORIGINAL BID OPENING DATE:
April 4, 2022
TIME: 11:00a.m., Central Time
REVISED BID OPENING DATE:
April 12, 2022, per Addendum No. 1
TIME: **11:00a.m.**, Central Time
CONTACT: Lisa Clark,
Contracts Negotiator
Email: Lisa.Clark@cityofchicago.org
3/25/2022 7175640

Table of Contents

BID SUBMITTAL CHECKLIST 1
Article 1. Requirements for Bidding and Instructions to Bidders 2
1.1. The Bid Documents 2
1.2. Obtaining the Bid Documents 2
1.3. Clarifications and Addenda 2
1.4. Examination of the Bid Documents and Work Site 2
1.5. Pre-Bid Conference 3
1.6. Questions Regarding the Bid Documents; Bidder Inquiry Deadline 3
1.7. Exceptions 3
1.8. Taxes Included in Bid Prices 3
1.9. Bid Prices Must Incorporate All Costs 3
1.10. Completion of the Bid Documents 3
1.11. Date, Time, and Place 4
1.12. Technical Difficulties 4
1.13. Conflicts of Interest 4
1.14. Required Forms and Fees 4
1.14.1. Certificate of Filing for Online EDS 4
1.14.2. MBE/WBE Program 4
1.14.3. Bid Deposits and Bid Bonds 5
1.14.4. Performance and Payment Bonds 5
1.14.5. Contractor's Financial Statement 5
1.14.6. Other Required Forms and Documents 6
1.15. Trade Names and Substitutions 6
1.16. Authorized Dealer/Distributor 7
1.17. Estimated Quantities 7
1.18. Withdrawal of Bids 8
1.19. Bid Opening 8
1.20. Effective Term of Bid 8
1.21. Evaluation of Bids 8
1.21.1. Determination of Responsiveness 8
1.21.1.1. Must Bid All Line Items 8
1.21.1.2. Mathematical Calculations 8
1.21.1.3. Unbalanced Bids 8
1.21.1.4. Cash Billing Terms 8
1.21.2. Determination of Responsibility 8
1.21.2.1. Bidder Debts or Defaults 9
1.21.2.2. Competency of Bidder 9
1.22. Rejection of Bids and Waiver of Informalities 9
1.23. Consideration of Bids 9
1.24. Bid Protests 9
1.25. Award of Contract; Notice of Award 9
1.26. Title VI Solicitation Notice 9
1.27. Policy Prohibiting Sexual Harassment (MCC 2-92-612) 9
1.28. Policy Regarding Non-Disclosure of Salary History (MCC 2-92-385) 10

Article 2. Incorporation of Exhibits 11
Article 3. Standard Terms And Conditions 12
3.1. General Provisions 12
3.1.1. Definitions 12
3.1.2. Interpretation of Contract 13
3.1.2.1. Order of Precedence 13
3.1.2.2. Interpretation and Rules 13
3.1.2.3. Severability 14
3.1.2.4. Entire Contract 14
3.1.3. Subcontracting and Assignment 14
3.1.3.1. No Assignment of Contract 14
3.1.3.2. Subcontracts 14
3.1.3.3. No Pledging or Assignment of Contract Funds Without City Approval 15
3.1.3.4. City's Right to Assign 15
3.1.3.5. Assigns 15
3.1.4. Contract Governance 15
3.1.4.1. Governing Law and Jurisdiction 15
3.1.4.2. Consent to Service of Process 15
3.1.4.3. Cooperation by Parties and between Contractors 15
3.1.4.4. No Third Party Beneficiaries 16
3.1.4.5. Independent Contractor 16
3.1.4.6. Authority 16
3.1.4.7. Joint and Several Liability 16
3.1.4.8. Notices 17
3.1.4.9. Amendments 17
3.1.4.10. No Waiver of Legal Rights 17
3.1.4.11. Non-appropriation of Funds 17
3.1.4.12. Participation By Other Government Agencies 18
3.1.5. Confidentiality 18
3.1.6. Indemnity 18
3.1.7. Non-Liability of Public Officials 19
3.1.8. Contract Extension Option 19
3.2. Compensation Provisions 20
3.2.1. Ordering, Invoices, and Payment 20
3.2.1.1. Purchase Orders 20
3.2.1.2. Invoices 20
3.2.1.3. Payment 20
3.2.1.4. Electronic Ordering and Invoices 21
3.2.1.5. City Right to Offset 21
3.2.1.6. Records 21
3.2.1.7. Audits 21
3.2.1.7.1. City's Right to Conduct Audits 21
3.2.1.7.2. Recovery for Over-Billing 21
3.2.2. Subcontractor Payment Reports 22
3.2.3. Prompt Payment to Subcontractors 22
3.2.3.1. Incorporation of Prompt Payment Language in Subcontracts 22
3.2.3.2. Payment to Subcontractors Within Seven Days 22

3.2.3.2.1. Reporting Failures to Promptly Pay 23
3.2.3.2.2. Whistleblower Protection 23
3.2.3.3. Liquidated Damages for Failure to Promptly Pay 23
3.2.3.4. Action by the City 23
3.2.3.5. Direct Payment to Subcontractors By City 24
3.2.4. General Price Reduction – Automatic Eligibility for General Price Reductions 24
3.3. Compliance With All Laws 24
3.3.1. General 24
3.3.2. Certification of Compliance with Laws 25
3.3.3. Federal Affirmative Action 25
3.3.4. Civil Rights Act of 1964, Title VI, Compliance With Nondiscrimination Requirements 25
3.3.4.1. Compliance with Federal Nondiscrimination Requirements 25
3.3.4.2. Non-discrimination 26
3.3.4.3. Solicitations for Subcontracts, Including Procurements of Materials and Equipment 26
3.3.4.4. Information and Reports 26
3.3.4.5. Sanctions for Noncompliance 27
3.3.4.6. Incorporation of Provisions 27
3.3.5. Other Non-Discrimination Requirements 27
3.3.5.1. Illinois Human Rights Act 27
3.3.5.1.1. Generally 27
3.3.5.1.2. State of Illinois Duties of Public Contractors (44 Ill. Admin. Code 750 et seq.) 27
3.3.5.1.3. State of Illinois Equal Employment Opportunity Clause 28
3.3.5.2. Chicago Human Rights Ordinance MCC Ch. 2-160 29
3.3.5.3. City of Chicago Equal Employment Opportunity Goals MCC 2-92-390 29
3.3.5.4. Business Enterprises Owned by People With Disabilities (BEPD) 29
3.3.6. Wages 29
3.3.6.1. Minimum Wage, Mayoral Executive Order 2014-1 29
3.3.6.2. Chicago Paid Sick Leave Ordinance 30
3.3.6.3. Equal Pay 30
3.3.7. Economic Disclosure Statement and Affidavit and Appendix A ("EDS") 30
3.3.7.1. Business Relationships With Elected Officials MCC Sect. 2-156-030(b) 30
3.3.7.2. MCC 1-23 and 720 ILCS 5/33E Bribery, Debts, and Debarment Certification 31
3.3.7.3. Federal Terrorist (No-Business) List 31
3.3.7.4. Governmental Ethics Ordinance 2-156 32
3.3.7.5. Lobbyists 32
3.3.8. Restrictions on Business Dealings 32
3.3.8.1. Prohibited Interests in City Contracts 32
3.3.8.2. Conflicts of Interest 32
3.3.8.3. Prohibition on Certain Contributions, Mayoral Executive Order 2011-4 33
3.3.9. Debts Owed to the City; Anti-Scofflaw, MCC Sect. 2-92-380 34
3.3.10. Other City Ordinances and Policies 34
3.3.10.1. False Statements 34
3.3.10.2. MacBride Principles Ordinance, MCC Sect. 2-92-580 34
3.3.10.3. City Hiring Plan Prohibitions 35
3.3.10.4. Inspector General 35
3.3.10.5. Duty to Report Corrupt Activity 36

3.3.10.6. Electronic Mail Communication 36
3.3.10.7. EDS Update Obligation 36
3.3.10.8. Wheel Tax (City Sticker) 36
3.3.10.9. Policy Prohibiting Sexual Harassment (MCC 2-92-612) 36
3.3.10.10. Policy on Non-Disclosure of Salary History (MCC 2-92-385) 37
3.3.11. Compliance with Environmental Laws and Related Matters 37
3.3.11.1. Definitions 37
3.3.11.2. Joint Ventures 38
3.3.11.3. Compliance With Environmental Laws 38
3.3.11.4. Costs 38
3.3.11.5. Proof of Noncompliance; Authority; Cure 38
3.3.11.6. Copies of Notices and Reports; Related Matters 39
3.3.11.7. Requests for Documents and Information 39
3.3.11.8. Environmental Claims and Related Matters 40
3.3.11.9. Preference for Recycled Materials 40
3.3.11.10. No W aste Disposal in Public Way MCC 11-4-1600(E) 40
3.3.11.11 COVID-19 Vaccination Policy 40
3.4. Contract Disputes 40
3.4.1. Procedure for Bringing Disputes to the Department 40
3.4.2. Procedure for Bringing Disputes before the CPO 41
3.5. Events of Default and Termination 41
3.5.1. Events of Default 41
3.5.2. Cure or Default Notice 42
3.5.3. Remedies 43
3.5.4. Non-Exclusivity of Remedies 43
3.5.5. City Reservation of Rights 43
3.5.6. Early Termination 43
3.6. Department-specific Requirements 43
3.6.1. Department of Aviation Standard Requirements 44
3.6.1.1. Confidentiality of Airport Security Data 44
3.6.1.2. Aviation Security 44
3.6.1.3. Airport Security Badges 44
3.6.1.4. General Requirements Regarding Airport Operations 45
3.6.1.4.1. Priority of Airport Operations 45
3.6.1.4.2. Interruption of Airport Operations 46
3.6.1.4.3. Safeguarding of Airport Property and Operations 46
3.6.1.4.4. Work on the Airfield 46
3.6.1.4.5. Parking Restrictions 47
3.6.1.5. General Civil Rights (Airport and Airway Improvement Act of 1982, Section 520) 47
3.6.2. Emergency Management and Communications (OEMC) Security Requirements 47
3.6.2.1. Identification of Workers and Vehicles 47
3.6.2.2. Access to Facilities 47
3.6.2.3. Security Badges and Vehicle Permits 48
3.6.2.4. Gates and Fences 49
3.6.2.5. Hazardous or Illegal Materials 49
3.6.3. Chicago Police Department Security Requirements 49
3.6.4. Department of Water Management ("DOWM") Security Requirements 50

3.6.4.1. Identification of Workers and Vehicles 50
3.6.4.2. Access to Facilities 50
3.6.4.3. Security Badges and Vehicle Permits 50
3.6.4.4. Gates and Fences 51
3.6.4.5. Hazardous or Illegal Materials 52
Article 4. Terms for Work Services Contracts 53
4.1. The Services 53
4.1.1. Scope of Services 53
4.1.2. Estimated Quantities/Level of Service 53
4.1.3. Unspecified Services 53
4.2. Performance of the Services 53
4.2.1. Standard of Performance 53
4.2.2. Standard Working Hours 53
4.2.3. Character of Workers 53
4.2.4. Quality of Materials and Inspection 54
4.2.5. Manufacturer's Warranty and Product Information 54
4.2.6. Contractor's Warranties 54
4.2.6.1. Correction or Re-Performance of Services 55
4.2.6.2. Timeliness 55
4.2.6.3. Delay 55
4.2.7. Public Convenience 56
4.2.8. Clean Up 56
4.2.9. Work Performed on City Property 56
4.2.10. Work In Progress 57
4.3. Compensation 57
4.4. Centralized Invoice Processing 57
4.5. Clean Diesel Fleet MCC 2-92-595 58
Article 5. Scope of Work and Detailed Specifications 60
5.1. General 60
5.2 Basis of Award 60
5.3 Funding 60
5.4 Contract Term 60
5.5 Price Adjustment (Capped Rate) 60
5.6. Authorized Dealer 61
5.7. Licensed New Vehicle Dealer 61
5.8. Portable Vehicle Impact Devices 61
5.8.1. Crash Rated Tested 62
5.8.2 Specification 62
5.9. Example of Ratings 67
5.10. Delivery for Group G 68
5.11. Vehicle and Equipment Additional Requirements (Group G) 69
5.11.1. General Construction 69
5.11.2. Standard Product 69
5.11.3. Design and Construction Practices 69
5.11.4. Quality Control 70
5.11.5. Training/Technical Assistance 70
5.11.6. Manuals, Certificates, Applications 70

5.11.7. Literature / Data 71
5.12. Group G Purchase of Drop-Deck Bollard Trailers 71
5.12.1. Overall Design & Dimensions 71
5.12.2. Trailer Frame, Deck and Controls 71
5.12.3. Running Gear 72
5.12.4. Suspension 72
5.12.5. Lighting and Wiring 73
5.12.6. Painting and Coating 73
5.12.7. Manufacturer's Services 73
5.13. Training and Inspection 73
5.14. Repair 73
5.15. Price List/Catalog 74
5.16. Quality of Service 75
5.17. Emergency Orders 75
5.18. Delivery 75
5.19. Exceptions 76
Article 6. Special Conditions Regarding Minority Business Enterprise Commitment and Women Business Enterprise Commitment For Commodities or Services 77
6.1. Policy and Terms 77
6.2. Definitions 78
6.3. Joint Ventures 79
6.4. Counting MBE/WBE Participation Toward the Contract Specific Goals 81
6.5. Regulations Governing Reductions to or Waiver of MBE/WBE Goals 83
6.5.1. Direct Participation 83
6.5.2. Assist Agency Participation in wavier/reduction requests 85
6.5.3. Impracticability 85
6.6. Procedure to Determine Bid Compliance 85
6.7. Reporting Requirements During the Term of the Contract 87
6.8. Changes to Compliance Plan 88
6.8.1. Permissible Basis for Change Required 88
6.8.2. Procedure for Requesting Approval 88
6.9. Non-Compliance and Damages 89
6.10. Arbitration 90
6.11. Equal Employment Opportunity 90
6.12. Attachments and Schedules 90
Attachment A: Assist Agency List (Revised October 2021) 91
Attachment B - Sample Format for Requesting Assist Agency Comments on Bidder's Request for Reduction or Waiver of MBE/WBE Goals 97
Schedule B – Affidavit of Joint Venture 98
Schedule C-1: Letter of Intent From MBE/WBE To Perform As Subcontractor, Supplier and/or Consultant 103
Schedule D-1: Affidavit of Implementation of MBE/WBE Goals and Participation Plan 104
Article 7. Insurance Requirements 109
7.1. Insurance to be Provided 109
7.1.1. Workers Compensation and Employers Liability (Primary and Umbrella) 109
7.1.2. Commercial General Liability (Primary and Umbrella) 109
7.1.3. Automobile Liability (Primary and Umbrella) 109

7.1.4. Excess/Umbrella 109
7.1.5. Property 110
7.2. Additional Requirements 110
7.2.1. Evidence of Insurance. 110
7.2.2. Failure to Maintain Insurance. 110
7.2.3. Notice of Material Change, Cancellation or Non-Renewal 110
7.2.4. Deductibles and Self-Insured Retentions. 110
7.2.5. Waiver of Subrogation 110
7.2.6. Contractors Insurance Primary 110
7.2.7. No Limitation as to Contractor's Liabilities 111
7.2.8. No Contribution by City 111
7.2.9. Insurance not Limited by Indemnification 111
7.2.10. Insurance and Limits Maintained. 111
7.2.11. Joint Venture or Limited Liability Company 111
7.2.12. Other Insurance obtained by Contractor. 111
7.2.13. Insurance required of Subcontractors. 111
Article 8. Economic Disclosure Statement and Affidavit (EDS) 112
8.1. Online EDS Filing Required Prior To Bid Opening 112
8.2. Online EDS Web Link 112
8.3. Online EDS Number 112
8.4. Online EDS Certification of Filing 112
8.5. Preparation Checklist for Registration 113
8.6. Preparation Checklist for EDS Submission 113
8.7. EDS Frequently Asked Questions 114
Article 9. Bidder Contact Information 118
9.1. BIDDER QUALIFICATIONS 118
9.2. REFERENCES/WORK EXPERIENCE 118
9.3. EXCEPTIONS (EXPLAIN) 118
9.4. BIDDER CONTACT INFORMATION AND ADDITIONAL BID DATA (GROUP G) 119
Article 10. Execution And Acceptance Pages 121
10.1. Bid Execution By a Corporation 122
10.2. Bid Execution By A Joint Venture 123
10.3. Bid Execution By A Partnership 124
10.4. Bid Execution By a Sole Proprietor 125
10.5. Bid Acceptance by City 126
EXHIBITS 127
EXHIBIT 1: INSURANCE CERTIFICATE OF COVERAGE 128
Exhibit 2: SEXUAL HARASSMENT POLICY AFFIDAVIT (SECTION 2-92-612) 129
EXHIBIT 3: SUPPLEMENTAL CONTRACT TERMS RELATING TO EXECUTIVE ORDER 2021-2 130
EXHIBIT 4: Additional Contract Provisions Under Department of Homeland Security ("DHS") Urban Area Security Initiative ("UASI") Funded Illinois Emergency Management Agency Grant 132
Exhibit 5: Grant Agreements 139

BID SUBMITTAL CHECKLIST

Missing Information, Documents, and/or Bonds May Invalidate Your Bid.

To help ensure that you are submitting a complete bid, place an "X" next to each item below after completing and incorporating the item into your bid package. Write "N/A" if an item does not apply to your bid.

1. _____ Bid Submittal Checklist
2. _____ Insurance Certificate of Coverage
3. _____ MBE/WBE Compliance Plan
    a. _____ Schedule B – Affidavit of Joint Venture MBE/WBE – (only if bidder is a joint venture)
    b. _____ Schedule C-1: Letter(s) of Intent from MBE/WBE to Perform as Sub-contractor, Supplier and/or Consultant (if applicable).
    c. _____ Schedule D-1: Affidavit of MBE/WBE Goal Implementation Plan (if applicable).
    d. _____ Request for a reduction or waiver of MBE/WBE goals (if applicable)
4. _____ Certificate of Filing of Economic Disclosure Statement and Affidavit (EDS)
5. _____ Proposal Page(s) (Schedule of Prices)
6. _____ Bid Execution Page
7. _____ Bid Deposit (if required)
8. _____ Sexual Harassment Policy Affidavit

NOTE: Each page requiring a signature must be signed by the person with proper authority and sworn before a Notary Public where noted.

NOTE: Each Bidder must acknowledge the receipt of a full set of Bid Documents and any and all Addenda at the top of the Bid Execution Page.

ARTICLE 1. REQUIREMENTS FOR BIDDING AND INSTRUCTIONS TO BIDDERS

Read this carefully before preparing your bid.

1.1. The Bid Documents

This is an eProcurement Bid. Bids are to be submitted through the City's "iSupplier" system, the City's eProcurement computer system for electronic bidding and providing Contractors with access to contract, ordering and payment information for their City contracts.

The Bid Documents means all the documents issued by the Chief Procurement Officer, or referenced by the Chief Procurement Officer as being available in the iSupplier system and incorporated by such reference, in connection with an invitation for bids or proposals and include the various components of the solicitation which include the Cover Page, Legal Advertisement Notice, these Contract Terms and Conditions, the Detailed Specifications, Plans and Drawings (if any), Insurance Requirements, and all other attachments as listed in the iSupplier Header Information, "Attachments" section, and any and all Clarifications and Addenda issued by the City. Bid Proposal Pages, Requirements for Bidding and Instructions for bidding and the following provisions apply to this bid. Upon the award and execution of a contract pursuant to the Bid Documents, the Bid Documents become the Contract Documents.

1.2. Obtaining the Bid Documents

Bidders are solely responsible for obtaining all Bid Documents, including Clarifications and Addenda.

Documents may be downloaded from the Department of Procurement Service's ("DPS") website at the following URL:

http://www.cityofchicago.org/eProcurement

Click on "Current Bids".

In order to receive notice of clarification and addenda, Bidders must be registered for and log-in to iSupplier, search for the solicitation number, open the solicitation for review, accept the disclaimer. This will sign Bidders up for notifications.

Bid Document Holders are listed on the Bid & Bond Room Opportunity Take Out List. The Opportunity Take Out List is public information and is posted to the DPS web site www.cityofchicago.org/TOL. To find Opportunity Take Out lists go to "Get Started Online" and search by specification number

1.3. Clarifications and Addenda

The City will send an email notification to suppliers who have indicated interest in a Bid that an addendum or clarification has been issued. The Clarifications and Addenda incorporated into the electronic bid document available at the following URL:

https://www.cityofchchicago.org/eProcurement

Suppliers that have indicated interest in a Bid will receive email notification that an addendum or clarification has been issued. There may be multiple Clarifications and Addenda. Failure to obtain Clarifications and/or Addenda, for whatever cause, will not relieve a Bidder from the obligation to bid accordingly to and comply with any changed or additional terms and conditions contained in the Clarifications and Addenda.

Electronic Acknowledgement of Clarifications and/or Addenda is mandatory to submit an electronic Bid. Any harm to the bidder resulting from failure to obtain all necessary documents, for whatever cause, will not be valid grounds for a protest against award(s) made under this bid Solicitation.

1.4. Examination of the Bid Documents and Work Site

Bidders are required to carefully examine all of the Bid Documents before completing the forms and submitting a Bid. If the specification calls for work to be performed onsite, Bidders are also required to inspect the site of the work to be performed, and familiarize itself with the conditions at the site that will affect the work.

A Bidder that is awarded a contract will be solely responsible for all costs arising from and associated with that Bidder's (i) failure to comply with the requirements of the Bid Documents, including, without limitation, this requirement to inspect the Bid Documents and site of the work, and (ii) failure to include any costs or expense attributable to site conditions that could have reasonably been discovered through a site inspection or examination of the Bid Documents.

1.5. Pre-Bid Conference

The Pre-Bid Conference will be held via Conference Call. All interested Attendees must register in advance of the Pre-Bid Conference Call. Same day registration not allowed. Pre-Registration must be arranged in advance of the scheduled Pre-Bid Conference Call. Attendees must send an email to Lisa Clark at lisa.clark@cityofchicago.org. Email Subject line must read: Portable Vehicle Impact Devices Conference Call. Registered Attendees will receive email confirmation with dial in number and link.

1.6. Questions Regarding the Bid Documents; Bidder Inquiry Deadline

All inquiries regarding the Bid Documents or procurement process must be directed to the Procurement Specialist/Senior Procurement Specialist in iSupplier via online discussion or via email at the address listed on the front cover of the Bid Documents.

The Bidder Inquiry Deadline is listed on the front cover of the Bid Documents under "Deadline for Questions". Inquiries received after the Bidder Inquiry Deadline will not be answered except at the discretion of the Chief Procurement Officer.

Bidders may only rely on written answers in a Clarification or in an Addendum duly issued by the Chief Procurement Officer. Bidders cannot rely on oral or informal responses; such answers will not be binding upon the City.

1.7. Exceptions

Any deviations from or exceptions to any provisions or requirements of the Bidding documents, including but not limited to the specifications of the goods and/or services to be provided, must be noted on the Proposal Page(s) or attached thereto, with the exact nature of the change outlined in sufficient detail, and as provided below under "Trade Names and Substitutions," as applicable. Bidder must provide the reason for which deviations were made. Failure of a Bidder to comply with the terms of this paragraph may be cause for rejection of its Bid.

If a Bidder takes exception to or deviates from any provision or requirement, the Chief Procurement Officer shall reject the Bid as non-responsive in the event that the Chief Procurement Officer, in his or her sole opinion, determines such exception(s) or deviations to be material.

1.8. Taxes Included in Bid Prices

With few exceptions, materials purchased by the City of Chicago are not subject to the Federal Excise Tax. The Illinois Retailers' Occupation Tax, Use Tax, and Municipal Retailers' Occupation Tax do not apply to materials or services purchased by the City of Chicago.

Bidders shall include all other applicable federal, state and local taxes, direct or indirect, in their Bid Prices.

1.9. Bid Prices Must Incorporate All Costs

Bid pricing must incorporate any/all peripheral costs including, but not limited to the costs of products/services, delivery/transportation charges, training, materials, labor, insurance, applicable taxes, warranty, overhead and profit, etc. that are required by the Bid Documents.

1.10. Completion of the Bid Documents

Bids for this Specification must be submitted electronically through iSupplier. Each Bidder must complete all of the forms listed on the Bid Submittal Checklist (with the exception of the Proposal Pages) in the Requirements section and scan and upload them as attachments to the electronic bid submission via iSupplier. Bidders may not change any of the Bid Documents. Any changes made by a Bidder to the Bid Documents may result in rejection of the Bid, and will not be binding upon the City.

Bidders must submit their pricing electronically by filling out bid lines in the electronic Price Schedule in the iSupplier system.

Bidders must use the Bid Execution Page that is appropriate for their form of business organization (e.g. sole proprietorship, corporation, partnership, or joint venture). The individual(s) that sign the Bid Execution Page on behalf of the Bidder, by their signature, represents and warrants to the City that such individual is authorized to execute bids and contracts on behalf of the Bidder, and that the Bidder agrees and shall be bound to all of the terms and conditions of the Bid Documents and, upon execution by the City, the Contract Documents, Signatures must be sworn before a Notary Public. The form must be printed, signed, notarized and scanned then uploaded as an attachment to the electronic bid submission. The Bid Execution page should be scanned as a separate PDF.

With the exception of the Bid Execution Page, combining multiple PDF attachments into one is strongly encouraged in order to minimize the number of uploaded documents.

1.11. Date, Time, and Place

Bids are to be submitted electronically to the Department of Procurement Services on the date and prior to the time stated on the Cover Page of the Bid Documents, or any agenda issued by the City to change such Bid Opening Date. No bid will be accepted after the Bid Opening Date. The time of the receipt of the bid will be determined solely by the "Time of Quote" generated by the iSupplier system. Paper bids will not be accepted.

1.12. Technical Difficulties

The bidder is solely responsible for ensuring timely submission of their electronic solicitation response. Failure to allow adequate time prior to the Bid Opening to complete and submit a response to a solicitation, particularly in the event technical support assistance is required, places the bidder and their response at risk of not being accepted on time. The bidder is advised that the iSupplier system requires acknowledgement of a disclaimer and an electronic signature before a solicitation response is accepted. The bidder is further advised that the iSupplier system checks for the completion of system-required fields before allowing the bidder to electronically sign and submit their response electronically. Bidders who wait until nearly the time of Bid Opening may not be allowed to sign and submit their document due to missing required fields.

Should the bidder encounter technical difficulty with their bid submission, the bidder must contact the City's eProcurement Help Desk at 312-744-HELP or customersupport@cityofchicago.org, Monday through Friday, 8:30 a.m. to 4:30 p.m., excluding City holidays.

1.13. Conflicts of Interest

If any Bidder (or any partner in a joint venture or partnership or any member of the limited liability company if the Bidder is a joint venture, partnership, LLP, or LLC) has assisted the City in the preparation of these Bidding Documents such that provision of such assistance would give Bidder an unfair advantage or otherwise impair the integrity of the procurement process, or if Bidder has an organizational conflict of interest that might compromise Bidder's ability to perform the contract, that Bidder may be disqualified from bidding. If applicable, Bidder must provide a statement and information disclosing its participation with respect to the Bid Documents and/or potential organizational conflicts of interest.

1.14. Required Forms and Fees

1.14.1. Certificate of Filing for Online EDS

Bidders must complete an online EDS prior to the bid due date. A Bidder who does not file an electronic EDS prior to the bid due date may be found non-responsive and its bid rejected. If you are unable to complete the EDS online and print a Certificate of Filing prior to the response due date, the City will accept a paper EDS provided written justification is provided explaining the Bidders good faith efforts to complete it before the response due date and the reasons why it could not be completed. Refer to the Instructions for Completing Economic Disclosure Statement and Affidavit On-Line.

1.14.2. MBE/WBE Program

The goals for MBE and WBE participation are set forth in the Proposal Pages. The rules, regulations, and forms for achieving these goals are set forth in the Special Conditions Regarding Minority Business Enterprise Commitment and Women Business Enterprise Commitment ("M/WBE Special Conditions").

- **Schedule B: Affidavit of Joint Venture** (if applicable)
  If applicable, complete and submit this form if a non-certified firm has formed a joint venture with one or more MBE/WBE certified firms to submit a Bid. Such Affidavit should be signed by the appropriate Joint Venture members and notarized.
- **MBE/WBE Letter of Intent to Perform as a Subcontractor, Supplier, or Consultant**
  (Schedule C, C-1, C-2, or C-3 as specified in M/WBE Special Conditions.)
  If applicable, include a completed Letter of Intent from each certified MBE or WBE that will perform as a Subcontractor, Supplier and/or Consultant. Such letter(s) must be signed and notarized.
- **Affidavit of Prime Contractor Regarding MBE/WBE Utilization Compliance Plan**
  (Schedule D, D-1, D-2, or D-3 as specified in M/WBE Special Conditions.)
  If applicable, include the Bidder's Affidavit of MBE/WBE Goal Implementation Plan. This Affidavit must be signed and notarized.
- **Request for a Reduction or Waiver of the MBE/WBE Goals**
  If applicable, after making good faith efforts, the Bidder is unable to provide a plan for the utilization of MBE and WBE firms that will achieve compliance with the MBE/WBE goals, the Bidder must, as required by the MBE/WBE Special Conditions, submit a request for whole or partial waiver of the goals with its Bid. Any waiver request must include documentation as required by the M/WBE Special Conditions including but not limited to notification to an assist agency.

1.14.3. Bid Deposits and Bid Bonds

When submitting an electronic bid, scan and upload a copy of your bid deposit with your submittal documents. The 1st and 2nd apparent low bidders will be required to deliver their original and properly executed bid deposit to the Bid and Bond Room within 2 business days following the Bid Opening Date. If a bid deposit is required, it will be indicated on the front cover of the Bid Documents

1.14.4. Performance and Payment Bonds

If a performance and payment bond is required, failure to provide the required bond within the required time period when requested will result in rejection of the bid and forfeit of the bid deposit, if a deposit was required. The forfeiture shall not limit any other City remedies against the Bidder. Performance and payment bonds must be in the form specified by the City, a specimen of which will be attached to the Bid Documents as an exhibit or available from the Bid & Bond Room.

MCC Section 2-92-040 requires that the surety be listed as a certified surety in the current edition of U.S. Treasury Department Circular 570 and have an underwriting limitation in that publication in an amount greater than the amount bid. Circular 570 is available at www.fms.treas.gov/c570. Co-sureties may be accepted in the sole discretion of the CPO, but each co-security must individually meet the requirement. Reinsurance may not be used to achieve a sufficient underwriting limitation.

If a performance and payment bond is required to be provided prior to contract award, it will be indicated on the front cover of the Bid Documents.

1.14.5. Contractor's Financial Statement

If requested by the Chief Procurement Officer, Bidder must file a "Contractor's Statement of Experience and Financial Condition" dated not earlier than the end of Bidder's last fiscal year period. The "Contractor's Statement of Experience and Financial Condition" will be kept on file as a representative statement for one year. The "Contractor's Statement of Experience and Financial Condition" forms are available in the Bid & Bond Room, City Hall Room 103, Chicago, IL 60602, or may be downloaded at

www.cityofchicago.org/form. Failure to provide a "Contractor's Statement of Experience and Financial Condition" if requested may be cause for rejection of the Bid.

1.14.6. Other Required Forms and Documents

Other forms required to be provided with the Bid include:

- Insurance Certificate of Coverage
- Sexual Harassment Policy Affidavit
- Economic Disclosure Statement and Affidavit ("EDS")
- Alternatively Powered Vehicles Affidavit (if applicable)
- Veteran-Owned Small Local Businesses and Eligible Joint Ventures (if applicable)
- Mentoring Program Bid Preference (if applicable)
- Commitment Regarding BEPD (if applicable)
- Commitment to Encourage Diverse Management and Workforce (if applicable)
- DBE or MBE/WBE compliance forms as applicable
- Sexual Harassment Policy Affidavit
- Proposal Page(s) (Schedule of Prices)
- Bid Execution Page

1.15. Trade Names and Substitutions

Reference to a specific manufacturer or trade name in this solicitation is intended to be descriptive (but not restrictive) and to indicate to prospective bidders those product(s) that have been deemed by the City to be satisfactory. The Bidder must, if awarded the Contract, provide the product(s) specified, unless equivalent alternatives have been proposed as described below and found acceptable to the Chief Procurement Officer.

A Bidder that chooses to respond to this solicitation for bids with alternate product(s) from those specified in the solicitation, must identify such alternate items with its Bid with a detailed explanation and documentation in support of how the alternate items proposed by the Bidder can perform as well as or better than those specified. Unless an alternate item is so identified, it is understood that the Bidder proposes, and will be required to provide, the specific item described in the specifications. No substitution of specified items will be allowed thereafter except as otherwise provided for in the specifications.

Documentation in support of alternate items includes:

1) Complete data substantiating compliance of proposed alternate items with requirements stated in the solicitation, including:
    a) Product identification, including manufacturer's name and address.
    b) Manufacturer's literature identifying:
        i) Product description
        ii) Reference standards
        iii) Performance and test data
    c) Samples, as applicable
    d) Name and address of similar projects on which the product has been used, and date of usage.
2) Itemized comparison of the proposed alternate item with product or service specified; listing of significant variations.

A Bidder warrants and represents that in making a formal request for substitution with alternate items that:

1) The proposed alternate item is equivalent to or superior in all respects to the product specified, and
2) The same warranties and guarantees will be provided for the alternate item as for the product specified.

The CPO may, in his or her sole discretion, accept an alternate item for a specified item, provided the alternate item so bid is, in the CPO's sole opinion, the equivalent of the item specified in the solicitation. An alternate item that the CPO determines not to be equivalent to the specified item shall render the bid non-responsive and the CPO shall reject the bid.

1.16. Authorized Dealer/Distributor

For bids involving the furnishing of equipment or other goods that are subject to manufacturer warranties that require sale or installation by authorized dealers or distributors, the Contractor must be the manufacturer or an authorized dealer/distributor of the proposed manufacturer and be capable of providing genuine parts, assemblies and/or accessories as supplied by the manufacturer. Further, the Contractor must be capable of furnishing original product warranty and manufacturers related services such as product information, product recall notices, etc. The Bid Documents will typically ask the Bidder to certify that it is an authorized dealer/distributor when this requirement is applicable. The Bidder's compliance with these requirements will be determined by the CPO, whose decision will be binding.

1.17. Estimated Quantities

Unless explicitly stated to the contrary in the Scope of Work, Detailed Specifications, or Proposal pages, any quantities shown on the Proposal Pages represent estimated usage and as such are for bid canvassing purposes only. The City reserves the right to increase or decrease quantities ordered. Nothing herein will be construed as intent on the part of the City to procure any goods or services beyond those determined by the City to be necessary to meet its needs.

The City will only be obligated to order and pay for such quantities as are from time to time ordered, performed and accepted on Blanket Releases issued directly by the Department.

1.17.1. Transparency Website; Trade Secrets

Consistent with the City's practice of making available all information submitted in response to a public procurement, all bids, any information and documentation contained therein, any additional information or documentation submitted to the City as part of this solicitation, and any information or documentation presented to City as part of negotiation of a contract or other agreement may be made publicly available through the City's Internet website.

However, Bidders may designate those portions of a Bid which contain trade secrets or other proprietary data ("Data") which Bidder desires remain confidential.

To designate portions of a Bid as confidential, Bidder must:

A. Mark the cover page as follows: "This bid includes trade secrets or other proprietary data."

B. Mark each sheet or Data to be restricted with the following legend: "Confidential: Use or disclosure of data contained on this sheet is subject to the restriction on the title page of this bid."

C. Upload into iSupplier a redacted copy of the entire bid or submission in .pdf format for posting on the City's website. Bidder is responsible for properly and adequately redacting any Data which Bidder desires remain confidential. If entire pages or sections are removed, they must be represented by a page indicating that the page or section has been redacted. Failure to provide a redacted copy may result in the posting of an un-redacted copy.

D. Provide a written explanation of the basis under which each redacted item has been deemed confidential, making reference to the Illinois Freedom of Information Act (5 ILCS 140/1 et seq.).

Indiscriminate labeling of material as "Confidential" may be grounds for deeming a bid as non-responsive.

All Bids submitted to the City are subject to the Freedom of Information Act. The City will make the final determination as to whether information, even if marked "confidential," will be disclosed pursuant to a request under the Freedom of Information Act, valid subpoena, or other legal requirement. Bidder agrees not to pursue any cause of action against the City with regard to disclosure of information.

1.18. Withdrawal of Bids
Bidders may withdraw their Bid at any time prior to the date and time for Bid opening. Requests for withdrawal must be made in writing on the Bidder's letterhead to the Bid & Bond Room. Bidders must make their own arrangements for the return of their Bids.

1.19. Bid Opening
Bids will be opened and read publicly in the Bid & Bond Room by the Department of Procurement Services immediately after the deadline for the submission of Bids has passed. Announcement of the Bids and the apparent low Bidder are neither final nor binding. All Bids and Bid Documents are subject to review by the Department of Procurement Services to determination the lowest responsive and responsible bidder and whether a contract will be awarded.

Bid tabulations are public information and are posted on the City's website www.cityofchicago.org/BidTab. URL is case sensitive. Select "Get Started Online" and search by specification number.

1.20. Effective Term of Bid
Unless a Bid is expressly rejected by the Chief Procurement Officer, all Bids will remain in effect for ninety (90) days subsequent to the Bid opening. The City may request that Bidders extend the effective period of their Bids. Such requests shall be in writing and will require the Bidders' written consent to the extension.

Bidder may not withdraw or cancel or modify its Bid for a period of ninety (90) calendar days after the advertised closing time for the receipt of Bids. The City reserves the right to withhold and deposit, as liquidated damages, the bid deposit of any bidder requesting withdrawal, cancellation or modification of its Proposal prior to the ninety (90) day period.

1.21. Evaluation of Bids

1.21.1. Determination of Responsiveness
DPS will review Bids to determine whether they conform to the requirements of the Bid Documents.

1.21.1.1. Must Bid All Line Items
The Bidder must bid all Line Items set forth on the Proposal Pages, except to the extent that the Specification expressly allows otherwise. Bids submitted to the contrary will be considered incomplete and as a result, will be rejected as being non-responsive to this requirement.

Per the Basis of Award, if Contract(s) will be awarded per Group, Bidders must bid all items within a Group, except to the extent that the Specification expressly allows otherwise, but Bidders are not required to bid all Groups. Bids submitted to the contrary will be considered incomplete and as a result, will be rejected as being non-responsive to this requirement.

1.21.1.2. Mathematical Calculations
The Chief Procurement Officer reserves the right to make corrections, after receiving the bids, to any clerical error apparent on the face of the bid, including but not limited to obviously incorrect units or misplaced decimal points, or arithmetic errors. In the event that comparison of the Bidder's "Unit Price" and "Total Price" submitted for any line item reveals a calculation error, the Unit Price will prevail.

1.21.1.3. Unbalanced Bids
The Chief Procurement Officer reserves the right to reject any Bid that, in his or her sole discretion and authority, determines is materially unbalanced.

1.21.1.4. Cash Billing Terms
Cash billing discounts offered will not be considered in the evaluation of bids.

1.21.2. Determination of Responsibility
The determination of the responsibility of a Bidder is within the sole discretion and authority of the Chief Procurement Officer.

The Chief Procurement Officer may request any Bidder to submit such additional information pertaining to the Bidder's responsibility as the Chief Procurement Officer deems necessary. Failure to comply with any such request will result in a finding of non-responsibility and rejection of the Bid.

1.21.2.1. Bidder Debts or Defaults

The Chief Procurement Officer reserves the right to refuse to award a Contract to any bidder that is in arrears or is in default to the City upon any debt or contract, or that is a defaulter, as surety or otherwise, upon any obligation to the City, or has failed to perform faithfully any previous contract with the City.

1.21.2.2. Competency of Bidder

The Bidder, if requested, must present within a reasonable time, as determined by the Chief Procurement Officer, evidence satisfactory to the Chief Procurement Officer of ability to perform the Contract and possession of necessary facilities, pecuniary resources and adequate insurance to comply with the terms of these specifications and contract documents.

1.22. Rejection of Bids and Waiver of Informalities

The Chief Procurement Officer, in his/her sole discretion and authority, may determine that it is in the best interest of the City to reject any or all Bids submitted in response to any Invitation for Bids. The Chief Procurement Officer, in his/her sole discretion and authority, may disregard or waive any informality in the Bids or bidding process.

1.23. Consideration of Bids

The CPO represents and acts for the City in all matters pertaining to this invitation for bids and any contract subsequently awarded. The CPO reserves the right to reject any and all bids and to disregard any informalities in a bid or the bidding process, when in his/her opinion the best interest of the City will be served by such action.

1.24. Bid Protests

The bidder shall submit any protests or claims regarding this solicitation to the office of the City's Chief Procurement Officer located at City Hall Room 806, 121 North LaSalle Street, Chicago, Illinois 60602.

All protests or claims must set forth the name and address of the protester, the specification number, the grounds for the protest or claim, and the course of action that the protesting party desires that the CPO undertake.

Copies of the Bid Protest Procedures (entitled Department of Procurement Services Solicitations and Contracting Process Protest Procedures) are available at the Bid & Bond Room and on DPS' website www.cityofchicago.org/procurement under "Rules, Regulations and Ordinances" then under the link marked "Solicitation and Contracting Process Protest Procedures."

1.25. Award of Contract; Notice of Award

The Contract consists of the Bid Documents. Upon the award and execution of a contract pursuant to the Bid Documents, the Bid Documents become the Contract Documents, which collectively comprise the Contract.

The Department of Procurement Services will, by written notice, notify the Bidder that is, per the Basis of Award, the lowest responsive and responsible Bidder of the City's award of a Contract.

1.26. Title VI Solicitation Notice

The City, in accordance with the provisions of Title VI of the Civil Rights Act of 1964 (78 Stat. 252, 42 U.S.C. §§ 2000d to 2000d-4) and the Regulations, hereby notifies all bidders that it will affirmatively ensure that any contract entered into pursuant to this advertisement, disadvantaged business enterprises will be afforded full and fair opportunity to submit bids in response to this invitation and will not be discriminated against on the grounds of race, color, or national origin in consideration for an award.

1.27. Policy Prohibiting Sexual Harassment (MCC 2-92-612)

In accordance with Section 2-92-612, Bidder shall, as prescribed by the Chief Procurement Officer, attest by affidavit (in the form of the "Sexual Harassment Policy Affidavit" Exhibit attached hereto) that Bidder has a written policy prohibiting sexual harassment that shall include, at a minimum, the following information: (i) the illegality of sexual harassment; (ii) the definition of sexual harassment; and (iii) the legal recourse available for victims of sexual harassment.

1.28. Policy Regarding Non-Disclosure of Salary History (MCC 2-92-385)

In accordance with Section 2-92-385, Bidder shall, as prescribed by the Chief Procurement Officer, attest by affidavit (in Appendix C to Bidder's Economic Disclosure Statement) that Bidder has a written policy (i) against screening job applicants based on their wage or salary history and (ii) seeking an applicant's wage or salary history.

ARTICLE 2. INCORPORATION OF EXHIBITS

The following attached Exhibits are made a part of this agreement:

- Exhibit 1: Insurance Certificate of Coverage
- Exhibit 2: Sexual Harassment Policy Affidavit (MCC 2-92-612)
- Exhibit 3: Supplemental Contract Terms Relating to Executive Order 2021-2
- Exhibit 4: Additional Contract Provisions Under Department of Homeland Security ("DHS") Urban Area Security Initiative ("UASI") Funded Illinois Emergency Management Agency Grant
- Exhibit 5: UASI Grant Documents

ARTICLE 3. STANDARD TERMS AND CONDITIONS

3.1. General Provisions

3.1.1. Definitions

"Addendum" is an official revision of the Bid Documents issued by the Chief Procurement Office prior to Bid Opening Date.

"Airports" means Chicago O'Hare International Airport and Chicago Midway International Airport.

"Airside" means, generally, those areas of an Airport which requires a person to pass through a security checkpoint to access. References to "sterile areas" generally mean Airside areas within terminal buildings. References to "Airfield", "Aircraft Operations Area", "AOA", or **"Secured areas"** generally mean outdoor Airside areas or areas not accessible to passengers.

"Attachments" are all the exhibits and other documents attached to the Bid Documents and/or incorporated into the Contract by reference.

"Bid" refers to an offer made by a Bidder in response to an invitation for bids which includes a binding proposal to perform the Contract which the City may rely on and accept, or in the case of an RFP or RFQ, the submission/proposal in response to that solicitation which may be subject to negotiation.

"Bidder" is a person, firm, or entity submitting a Bid in response to an invitation for bids; for RFPs and RFQs, references may be made to "Respondents." Once the Contract is awarded the Contractor shall assume that all references to a Bidder or Respondent and such attendant obligations apply to the Contractor.

"Bid Opening Date" is the date and time publicly advertised by the Chief Procurement Officer as the deadline for submission of Bids; this may be referred to as a "Proposal Due Date" for RFP and RFQ solicitations.

"Bid Documents" means all the documents issued by the Chief Procurement Officer or referenced by the Chief Procurement Officer as being available on the City's website and/or iSupplier system incorporated by such reference, in connection with an invitation for bids or proposals. Except for such Bid Documents as are posted on the City's website and/or iSupplier system and incorporated by reference, all Bid Documents must be submitted by a bidder on the Bid Opening Date.

"Business Day" means business days (Monday through Friday, excluding legal holidays, or City shut-down days) in accordance with the City of Chicago business calendar.

"Calendar Day" means all calendar days in accordance with the world-wide accepted calendar.

"Chief Procurement Officer" abbreviated as "CPO" means the chief executive of the City's Department of Procurement Services ("DPS"), and any representative duly authorized in writing to act on the Chief Procurement Officer's behalf.

"**City"** means the City of Chicago, a municipal corporation and home rule government under Sections 1 and 6(a), Article VII, of the 1970 Constitution of the State of Illinois.

"Commissioner" means the chief executive of any City department that participates in this Contract (regardless of the actual title of such chief executive), and any representative duly authorized in writing to act on the Commissioner's behalf with respect to this Contract.

"Contact Person" means the Contractor's management level personnel who will work as liaison between the City and the Contractor and be available to respond to any problems that may arise in connection with Contractor's performance under the Contract.

"Contract" means, upon notice of award from the CPO, the contract consisting of all Bid Documents relating to a specific invitation for bids or proposals, and all amendments, modifications, or revisions made from time to time in accordance with the terms thereof. All such documents comprising the Contract are referred to as the "Contract Documents".

"Contractor" means the Bidder or Proposer (person, firm, or entity) that is awarded the Contract by the CPO. Any references to the Bidder or Proposer in the Contract Documents is understood to apply to the Contractor.

"Department" which may also be referred to as the using/user Department is the City Department which appears on the applicable Purchase Order Release for goods, work, or services provided under this Contract.

"Detailed Specifications" refers to the contract specific requirements that includes but is not limited to a detailed description of the scope, term, compensation, price escalation, and such other additional terms and conditions governing this specific Contract.

"Holidays" refers to the official City Holidays when the City is generally closed for business which includes: New Year's Day, Dr. Martin Luther King Jr.'s Birthday, Lincoln's Birthday, Washington's Birthday, Pulaski Day, Memorial Day, Juneteenth Day, Independence Day, Labor Day, Columbus Day, Veteran's Day, Thanksgiving Day, and Christmas Day.

"iSupplier" refers to the City's eProcurement computer system for electronic bidding and providing Contractors with access to contract, ordering and payment information for their City contracts.

"MCC" is the abbreviation for the Municipal Code of Chicago.

"Party" or collectively "Parties" refers to the entities that have entered into this Contract including the Contractor and the City.

"Proposal Pages" means the section within eProcurement labelled "Lines" or "Price Schedule" where the bidder enters their unit prices. The eProcurement system will calculate the extended prices and total price.

"Purchase Order" means a written purchase order from a Department referencing this Contract. Purchase Orders may also be referred to as "Blanket Releases".

"Services" refers to all work, services, and materials whether ancillary or as required by the Detailed Specifications that Contractor provides in performance of its obligations under this Contract.

"Specification" means the Bid Documents, including but not limited to the Detailed Specifications.

"Subcontractor" means any person or entity with whom the Contractor contracts to provide any part of the goods, services or work to be provided by Contractor under the Contract, including subcontractors of any tier, suppliers and material men, whether or not in privity with the Contractor.

3.1.2. Interpretation of Contract

3.1.2.1. Order of Precedence

The order of precedence of the component contract parts will be as follows:

- If funded by the Federal government or State of Illinois, terms required by the Federal Government or State of Illinois, as applicable, whether set out in this document, in a Task Order Request (if applicable), or otherwise.
- Standard provisions and form provisions relating to this procurement type
- Scope of Work and Detailed Specifications
- Task Order (if applicable)
- All other parts of this Contract.

Provided, however, in the event of an inconsistency between terms set out among different component parts of the Contract, or terms set out within a Contract part, notwithstanding the order of precedence noted above, the term that is most favorable to the City controls, unless expressly stated otherwise.

3.1.2.2. Interpretation and Rules

Unless a contrary meaning is specifically noted elsewhere, the phrases "as required", "as directed", "as permitted", and similar words mean the requirements, directions, and permissions of the Commissioner or CPO, as applicable. Similarly, the words "approved", "acceptable", "satisfactory", and similar words mean approved by, acceptable to, or satisfactory to the Commissioner or the CPO, as applicable.

The words "necessary", "proper", or similar words used with respect to the nature or extent of work or services mean that work or those services must be conducted in a manner, or be of a character which is necessary or proper for the type of work or services being provided in the opinion of the Commissioner and the CPO, as applicable. The judgment of the Commissioner and the CPO in such matters will be considered final.

Wherever the imperative form of address is used, such as "provide equipment required" it will be understood and agreed that such address is directed to the Contractor unless the provision expressly states that the City will be responsible for the action.

3.1.2.3. Severability
The invalidity, illegality, or unenforceability of any one or more phrases, sentences, clauses, or sections in this Contract does not affect the remaining portions of this Contract.

3.1.2.4. Entire Contract
The Contract Documents constitute the entire agreement between the parties and may not be modified except by the subsequent written agreement of the parties.

3.1.3. Subcontracting and Assignment

3.1.3.1. No Assignment of Contract
Pursuant to 65 ILCS 8-10-14, Contractor may not assign this Contract without the prior written consent of the CPO. In no case will such consent relieve the Contractor from its obligations, or change the terms of the Contract. The Contractor must notify the CPO, in writing, of the name of any proposed assignee and the reason for the assignment; consent to which is solely in the CPO's discretion.

3.1.3.2. Subcontracts
No part of the goods, work, or services to be provided under this Contract may be subcontracted without the prior written consent of the CPO; but in no case will such consent relieve the Contractor from its obligations, or change the terms of the Contract. Further, substitution of a previously approved Subcontractor without the prior written consent of the CPO is not permitted. The Contractor must notify the CPO of the names of all Subcontractors to be used and shall not employ any that the CPO has not approved. Prior to proposing the use of a certain Subcontractor, the Contractor must verify that neither the Subcontractor nor any of its owners is debarred from or otherwise ineligible to participate on City contracts. This information can be found on the City's website:
http://www.cityofchicago.org/city/en/depts/dps/provdrs/comp/svcs/debarred_firms_list.html

The Contractor will only subcontract with competent and responsible Subcontractors. If, in the judgment of the Commissioner or the CPO, any Subcontractor is careless, incompetent, violates safety or security rules, obstructs the progress of the services or work, acts contrary to instructions, acts improperly, is not responsible, is unfit, is incompetent, violates any laws applicable to this Contract, or fails to follow the requirements of this Contract, then the Contractor will, immediately upon notice from the Commissioner or the CPO, discharge or otherwise remove such Subcontractor and propose an acceptable substitute for CPO approval. Removal and substitution must be in compliance with any applicable requirements of the MBE/WBE or DBE program.

All subcontracts and all approvals of Subcontractors are, regardless of their form, considered conditioned upon performance by the Subcontractor in accordance with the terms and conditions of this Contract. Upon request of the City, Contractor must promptly provide a copy of its

agreement(s) with its subcontractor(s). All subcontracts must contain provisions that require the subcontracted activity be performed in strict accordance with the requirements of this Contract, provide that the Subcontractors are subject to all the terms of this Contract, and are subject to the approval of the CPO. If the subcontract agreements do not prejudice any of the City's rights under this Contract, such agreements may contain different provisions than are provided in this Contract with respect to extensions of schedule, time of completion, payments, guarantees and matters not affecting the quality of the activity to be performed.

3.1.3.3. No Pledging or Assignment of Contract Funds Without City Approval

The Contractor may not pledge, transfer, or assign any interest in this Contract or contract funds due or to become due without the prior written approval of the CPO. Any such attempted pledge, transfer, or assignment, without the prior written approval of the CPO is void as to the City and will be deemed an event of default under this Contract.

3.1.3.4. City's Right to Assign

The City expressly reserves the right to assign or otherwise transfer all or any part of its interests in this Contract without the consent or approval of the Contractor.

3.1.3.5. Assigns

All of the terms and conditions of this Contract are binding upon and inure to the benefit of the parties hereto and their respective legal representatives, successors, transferees, and assigns.

3.1.4. Contract Governance

3.1.4.1. Governing Law and Jurisdiction

This Contract will be governed in accordance with the laws of the State of Illinois, without regard to choice of law principles. The Contractor hereby irrevocably submits, and will cause its Subcontractors to submit, to the original jurisdiction of those State or Federal courts located within the County of Cook, State of Illinois, with regard to any controversy arising out of, relating to, or in any way concerning the execution or performance of this Contract and irrevocably agrees to be bound by any final judgment rendered thereby from which no appeal has been taken or is available. The Contractor irrevocably waives any objection (including without limitation any objection of the laying of venue or based on the grounds of forum non conveniens) which it may now or hereafter have to the bringing of any action or proceeding with respect to this Contract in the jurisdiction set forth above.

3.1.4.2. Consent to Service of Process

The Contractor agrees that service of process on the Contractor may be made, at the option of the City, either by registered or certified mail addressed to the applicable office as provided for in this Contract, by registered or certified mail addressed to the office actually maintained by the Contractor, or by personal delivery on any officer, director, or managing or general agent of the Contractor. The Contractor designates and appoints the representative identified on the signature page hereto under the heading "Designation of Agent for Service Process", as its agent in Chicago, Illinois, to receive on its behalf service of all process (which representative will be available to receive such service at all times), such service being hereby acknowledged by such representative to be effective and binding service in every respect. Said agent may be changed only upon the giving of written notice by the Contractor to the City of the name and address of a new Agent for Service of Process who works within the geographical boundaries of the City of Chicago. Nothing herein will affect the right to serve process in any other manner permitted by law or will limit the right of the City to bring proceedings against the Contractor in the courts of any other jurisdiction.

3.1.4.3. Cooperation by Parties and between Contractors

The Parties hereby agree to act in good faith and cooperate with each other in the performance of this Contract. The Contractor further agrees to implement such measures as may be necessary to ensure that its staff and its Subcontractors will be bound by the provisions of this Contract. The City

will be expressly identified as a third party beneficiary in the subcontracts and granted a direct right of enforcement thereunder.

Unless otherwise provided in Detailed Specifications, if separate contracts are let for work within or adjacent to the project site as may be further detailed in the Contract Documents, each Contractor must perform its Services so as not to interfere with or hinder the progress of completion of the work being performed by other contractors.

Each Contractor involved shall assume all liability, financial or otherwise, in connection with its contract, and shall protect and hold harmless the City from any and all damages or claims that may arise because of inconvenience, delay, or loss experienced by the Contractor because of the presence and operations of other contractors working within the limits of its work or Services. Each Contractor shall assume all responsibility for all work not completed or accepted because of the presence and operations of other contractors.

The Contractor must as far as possible, arrange its work and space and dispose of the materials being used, so as not to interfere with the operations of the other contractors within or adjacent to the limits of the project site.

3.1.4.4. No Third Party Beneficiaries
The parties agree that this Contract is solely for the benefit of the parties and nothing herein is intended to create any third party beneficiary rights for subcontractors or other third parties.

3.1.4.5. Independent Contractor
This Contract is not intended to and does not constitute, create, give rise to, or otherwise recognize a joint venture, partnership, corporation or other formal business association or organization of any kind between Contractor and the City. The rights and the obligations of the parties are only those set forth in this Contract. Contractor must perform under this Contract as an independent contractor and not as a representative, employee, agent, or partner of the City.

This Contract is between the City and an independent contractor and, if Contractor is an individual, nothing provided for under this Contract constitutes or implies an employer-employee relationship such that:

The City will not be liable under or by reason of this Contract for the payment of any workers' compensation award or damages in connection with the Contractor performing the Services required under this Contract.

Contractor is not entitled to membership in any City Pension Fund, Group Medical Insurance Program, Group Dental Program, Group Vision Care, Group Life Insurance Program, Deferred Income Program, vacation, sick leave, extended sick leave, or any other benefits ordinarily provided to individuals employed and paid through the regular payrolls of the City.

The City is not required to deduct or withhold any taxes, FICA or other deductions from any compensation provided to Contractor.

3.1.4.6. Authority
Execution of this Contract by the Contractor is authorized and signature(s) of each person signing on behalf of the Contractor have been made with complete and full authority to commit the Contractor to all terms and conditions of this Contract, including each and every representation, certification, and warranty contained herein, attached hereto and collectively incorporated by reference herein, or as may be required by the terms and conditions hereof. If other than a sole proprietorship, Contractor must provide satisfactory evidence that the execution of the Contract is authorized in accordance with the business entity’s rules and procedures.

3.1.4.7. Joint and Several Liability

In the event that Contractor, or its successors or assigns, if any, is comprised of more than one individual or other legal entity (or a combination thereof), then and in that event, each and every obligation or undertaking herein stated to be fulfilled or performed by Contractor will be the joint and several obligation or undertaking of each such individual or other legal entity.

3.1.4.8. Notices
All communications and notices to the City from the Contractor must be faxed, delivered personally, electronically mailed or mailed first class, postage prepaid, to the Commissioner of the using Department that appears on the applicable Purchase Order, with a copy to the Chief Procurement Officer, Room 806, City Hall, 121 N. LaSalle Street, Chicago, Illinois 60602.

A copy of any communications or notices to the City relating to Contract interpretation, a dispute, or indemnification obligations shall also be sent by the same means set forth above to the Department of Law, Room 600, City Hall, 121 N LaSalle Street, Chicago, Illinois 60602.

Pre-award communications may also be sent via iSupplier online discussions.

All communications and notices from the City to the Contractor, unless otherwise provided for, will be faxed, delivered personally, electronically mailed, electronically communicated in iSupplier via online discussion, or mailed first class, postage prepaid, to the Contractor care of the name and to the address listed on the Bid Documents' proposal page. If this contract was awarded through a process that does not use bid or proposal documents, notices to contractor will be sent to an address specified in the Contract.

3.1.4.9. Amendments
Following Contract award, no change, amendment, or modification of the Contract Documents or any part thereof, is valid unless stipulated in writing and signed by the Contractor, Mayor, CPO, and Comptroller, unless specifically allowed for by the Contract Documents.

3.1.4.10. No Waiver of Legal Rights
Neither the acceptance by the City, or any representative of the City, nor any payment for or acceptance of the whole or any part of the deliverables, nor any extension of time, nor any possession taken by the City, shall operate as a waiver by the City of any portion of the Contract, or of any power herein reserved or any right of the City to damages herein provided.

A waiver of any breach of the Contract shall not be held to be a waiver of any other or subsequent breach. Whenever under this Contract the City by a proper authority waives the Contractor's performance in any respect or waives a requirement or condition to either the City's or the Contractor's performance, the waiver so granted, whether express or implied, shall only apply to the particular instance and will not be deemed a waiver forever or for subsequent instance of the performance, requirement, or condition. No such waiver shall be construed as a modification of this Contract regardless of the number of times the City may have waived the performance, requirement, or condition.

3.1.4.11. Non-appropriation of Funds
Pursuant to 65 ILCS 5/8-1-7, any contract for the expenditure of funds made by a municipality without the proper appropriation is null and void.

If no funds or insufficient funds are appropriated and budgeted in any fiscal period of the City for payments to be made under this Contract, then the City will notify the Contractor of that occurrence and this Contract shall terminate on the earlier of the last day of the fiscal period for which sufficient appropriation was made or whenever the funds appropriated for payment under this Contract are exhausted.

No payments will be made to the Contractor under this Contract beyond those amounts appropriated and budgeted by the City to fund payments under this Contract.

3.1.4.12. Participation By Other Government Agencies

Other Local Government Agencies (defined below) may be eligible to participate in this Contract if (a) such agencies are authorized, by law or their governing bodies, to execute such purchases, (b) such authorization is consented to by the City of Chicago's CPO, and (c) such purchases have no net adverse effect on the City of Chicago and result in no diminished services from the Contractor to the City's Departments.

Examples of such Local Government Agencies are: the Chicago Board of Education, Chicago Park District, City Colleges of Chicago, Chicago Transit Authority, Chicago Housing Authority, Chicago Board of Elections, Metropolitan Pier and Exposition Authority (McCormick Place, Navy Pier), and the Municipal Courts.

Said purchases will be made upon the issuance of a purchase order directly from the Local Government Agency. The City will not be responsible for payment of any amounts owed by any other Local Government Agencies, and will have no liability for the acts or omissions of any other Local Government Agency.

3.1.5. Confidentiality

All deliverables and reports, data, findings or information in any form prepared, assembled or encountered by or provided by Contractor under this Contract are property of the City and are confidential, except as specifically authorized in this Contract or as may be required by law. Contractor must not allow the Deliverables to be made available to any other individual or organization without the prior written consent of the City. Further, all documents and other information provided to Contractor by the City are confidential and must not be made available to any other individual or organization without the prior written consent of the City. Contractor must implement such measures as may be necessary to ensure that its staff and its Subcontractors are bound by the confidentiality provisions contained in this Contract.

Contractor must not issue any publicity news releases or grant press interviews, and except as may be required by law during or after the performance of this Contract, disseminate any information regarding its Services or the project to which the Services pertain without the prior written consent of the Commissioner.

If Contractor is presented with a request for documents by any administrative agency or with a subpoena duces tecum regarding any records, data or documents which may be in Contractor's possession by reason of this Contract, Contractor must immediately give notice to the Commissioner, CPO and the Corporation Counsel for the City with the understanding that the City will have the opportunity to contest such process by any means available to it before the records or documents are submitted to a court or other third party. Contractor, however, is not obligated to withhold the delivery beyond the time ordered by the court or administrative agency, unless the subpoena or request is quashed or the time to produce is otherwise extended.

3.1.6. Indemnity

Contractor must defend, indemnify, keep and hold harmless the City, its officers, representatives, elected and appointed officials, agents and employees (collectively, the "Indemnified Parties,") from and against any and all Losses (as defined below), in consequence of the granting of this Contract or arising out of or being in any way connected with the Contractor's performance under this Contract, except as otherwise provided in 740 ILCS 35 "Construction Contract Indemnification for Negligence Act" if it applies, including those related to: injury, death or damage of or to any person or property; any infringement or violation of any property right (including any patent, trademark or copyright); failure to pay or perform or cause to be paid or performed Contractors covenants and obligations as and when required under this Contract or otherwise to pay or perform its obligations to any subcontractor; the City's exercise of its rights and remedies under this Contract; and injuries to or death of any employee of Contractor or any subcontractor under any workers compensation statute. When 740 ILCS 35 applies,

indemnification provided by the Contractor to the Indemnified Parties will be to the maximum extent permitted under applicable law.

"Losses" means, individually and collectively, liabilities of every kind, including monetary damages and reasonable costs, payments and expenses (such as, but not limited to, court costs and reasonable attorneys' fees and disbursements), claims, demands, actions, suits, proceedings, fines, judgments or settlements, any or all of which in any way arise out of or relate to the negligent or otherwise wrongful errors, acts, or omissions of Contractor, its employees, agents and subcontractors.

The Contractor will promptly provide, or cause to be provided, to the Commissioner and the Corporation Counsel copies of such notices as Contractor may receive of any claims, actions, or suits as may be given or filed in connection with the Contractor's performance or the performance of any Subcontractor and for which the Indemnified Parties are entitled to indemnification hereunder.

At the City Corporation Counsel's option, Contractor must defend all suits brought upon all such Losses and must pay all costs and expenses incidental to them, but the City has the right, at its option, to participate, at its own cost, in the defense of any suit, without relieving Contractor of any of its obligations under this Contract. Any settlement must be made only with the prior written consent of the City Corporation Counsel, if the settlement requires any action on the part of the City.

The Contractor shall be solely responsible for the defense of any and all claims, demands, or suits against the Indemnified Parties, including without limitation, claims by an employee, subcontractors, agents, or servants of Contractor even though the claimant may allege that the Indemnified Parties were in charge of the work or service performed under the Contract, that it involves equipment owned or furnished by the Indemnified Parties, or allege negligence on the part of the Indemnified Parties. The City will have the right to require Contractor to provide the City with a separate defense of any such suit.

To the extent permissible by law, Contractor waives any limits to the amount of its obligations to indemnify, defend or contribute to any sums due to third parties arising out of any Losses, including but not limited to any limitations on Contractor's liability with respect to a claim by any employee of Contractor arising under the Workers Compensation Act, 820 ILCS 305/1 *et seq*. or any other related law or judicial decision (such as, *Kotecki v. Cyclops Welding Corporation*, 146 III. 2d 155 (1991)). The City, however, does not waive any limitations it may have on its liability under the Illinois Workers Compensation Act, the Illinois Pension Code or any other statute.

The indemnities in this section survive expiration or termination of this Contract for matters occurring or arising during the term of this Contract or as the result of or during the Contractor's performance of work or services beyond the term. Contractor acknowledges that the requirements set forth in this section to indemnify, keep and save harmless and defend the City are apart from and not limited by the Contractor's duties under this Contract, including the insurance requirements set forth in the Contract.

3.1.7. Non-Liability of Public Officials

Contractor and any assignee or Subcontractor of Contractor must not charge any official, employee or agent of the City personally with any liability or expenses of defense or hold any official, employee or agent of the City personally liable to them under any term or provision of this Contract or because of the City's execution, attempted execution or any breach of this Contract.

3.1.8. Contract Extension Option

The City has the option to unilaterally extend the term of this Contract prior to the expiration of the initial Term, for up to thirty-six (36) months, subject to acceptable performance by the Contractor and contingent upon the appropriation of sufficient funds. The option may be exercised as a single thirty -six-month extension or up to three 12-month extensions, each with a term no less than twelve months.

Before expiration of the then current term, the Chief Procurement Officer will give the Contractor notice, in writing, that the City is exercising its option to renew the Contract for the approaching option

period. The date on which the Chief Procurement Officer gives notice is the date the notice is mailed, if it is mailed, or the date the notice is delivered, if sent by courier or messenger service.

The City may extend this Contract once following the expiration of the contract term for up to 181 Calendar Days or until such time as a new contract has been awarded for the purpose of providing continuity of services and/or supply while procuring a replacement contract subject to acceptable performance by the Contractor and contingent upon the appropriation of sufficient funds. The CPO will give the Contractor notice of the City's intent to exercise its option to renew the Contract for the approaching option period.

3.2. Compensation Provisions

3.2.1. Ordering, Invoices, and Payment

3.2.1.1. Purchase Orders

Requests for work, services or goods in the form of a Purchase Order will be issued by the Department and sent to the Contractor to be applied against the Contract. The Contactor must not honor any order(s), perform work or services or make any deliveries of goods without receipt of a Purchase Order issued by the City of Chicago. Any work, services, or goods provided by the Contractor without a Purchase Order is made at the Contractor's risk. Consequently, in the event such Purchase Order is not provided by the City, the Contractor releases the City from any liability whatsoever to pay for any work, services, or goods provided without said Purchase Order.

Purchase Orders will indicate quantities ordered for each line item, unit/total cost, shipping address, delivery date, fund chargeable information, catalog information (if applicable), and other pertinent instructions regarding performance or delivery.

3.2.1.2. Invoices

If required by the Scope of Work / Detailed Specifications, original invoices must be sent by the Contractor to the Department to apply against the Contract. Invoices must be submitted in accordance with the mutually agreed upon time period with the Department. All invoices must be signed, dated and reference the City's Purchase Order number and Contract number. A signed work ticket, time sheets, manufacturer's invoice, if applicable, or any documentation requested by the Commissioner must accompany each invoice. If a Contractor has more than one contract with the City, separate invoices must be prepared for each contract in lieu of combining items from different contracts under the same invoice. Invoice quantities, description of work, services or goods, unit of measure, pricing and/or catalog information must correspond to the items on the accepted Price List or Proposal Pages or of the Bid Documents. If invoicing Price List/Catalog items, indicate Price List/Catalog number, item number, Price List/Catalog date and Price List/Catalog page number on the invoice.

3.2.1.3. Payment

The City will process payment within sixty (60) calendar days after receipt of invoices and all supporting documentation necessary for the City to verify the satisfactory delivery of work, services or goods to be provided under this Contract.

Contractor may be paid, at the City's option, by electronic payment method. If the City elects to make payment through this method, it will so notify the Contractor, and Contractor agrees to cooperate to facilitate such payments by executing the City's electronic funds transfer form, available for download from the City's website at: http://www.cityofchicago.org/content/dam/city/depts/fin/supp_info/DirectDepositCityVendor.pdf. The City reserves the right to offset mistaken or wrong payments against future payments.

The City will not be obligated to pay for any work, services or goods that were not ordered with a Purchase Order or that are non-compliant with the terms and conditions of the Contract Documents. Any goods, work, or services which fail tests and/or inspections are subject to correction, exchange or replacement at the cost of the Contractor.

3.2.1.4. Electronic Ordering and Invoices

The Contractor will cooperate in good faith with the City in implementing electronic ordering and invoicing, including but not limited to price lists/catalogs, purchase orders, releases and invoices. The electronic ordering and invoice documents will be in a format specified by the City and transmitted by an electronic means specified by the City. Such electronic means may include, but are not limited to, disks, e-mail, EDI, FTP, web sites, and third party electronic services. The CPO reserves the right to change the document format and/or the means of transmission upon written notice to the Contractor. Contractor will ensure that the essential information, as determined by the CPO, in the electronic document, corresponds to that information submitted by the Contractor in its paper documents. The electronic documents will be in addition to paper documents required by this Contract, however, by written notice to the Contractor, the CPO may deem any or all of the electronic ordering and invoice documents the official documents and/or eliminate the requirement for paper ordering and invoice documents.

3.2.1.5. City Right to Offset

The City may offset against any invoice from Contractor any costs incurred by the City as a result of event of default by Contractor under this Contract or otherwise resulting from Contractor's performance or non-performance under this Contract, including but not limited to any credits due as a result of over-billing by Contractor or overpayments made by the City. If the amount offset is insufficient to cover those costs, Contractor is liable for and must promptly remit to the City the balance upon written demand for it. This right to offset is in addition to and not a limitation of any other remedies available to the City.

3.2.1.6. Records

Upon request the Contractor must furnish to the City such information related to the progress, execution, and cost of the Services. All books and accounts in connection with this Contract must be open to inspection by authorized representatives of the City. The Contractor must make these records available at reasonable times during the performance of the Services and will retain them in a safe place and must retain them for a period that is the longer of five (5) years or as required by relevant retention schedules after the expiration or termination of the Contract.

3.2.1.7. Audits

3.2.1.7.1. City's Right to Conduct Audits

The City may, in its sole discretion, audit the records of Contractor or its Subcontractors, or both, at any time during the term of this Contract or within five years after the Contract ends, in connection with the goods, work, or services provided under this Contract. Each calendar year or partial calendar year may be deemed an "audited period".

3.2.1.7.2. Recovery for Over-Billing

If, as a result of such an audit, it is determined that Contractor or any of its Subcontractors has overcharged the City in the audited period, the City will notify Contractor. Contractor must then promptly reimburse the City for any amounts the City has paid Contractor due to the overcharges and, depending on the facts, also some or all of the cost of the audit, as follows:

If the audit has revealed overcharges to the City representing less than 5% of the total value, based on the contract prices, of the goods, work, or services provided in the audited period, then the Contractor must reimburse the City for 50% of the cost of the audit and 50% of the cost of each subsequent audit that the City conducts;

If, however, the audit has revealed overcharges to the City representing 5% or more of the total value, based on the contract prices, of the goods, work, or services provided in the audited period, then Contractor must reimburse the City for the full cost of the audit and of each subsequent audit.

Failure of Contractor to reimburse the City in accordance with the foregoing is an event of default under this Contract, and Contractor will be liable for all of the City's costs of collection, including any court costs and attorneys' fees.

3.2.2. Subcontractor Payment Reports

The Contractor must report payments to Subcontractors on a monthly basis in the form of an electronic report. Upon the first payment issued by the City to the Contractor for services performed, on the first day of each month and every month thereafter, email and/or fax notifications will be sent to the Contractor with instructions to report payments to Subcontractors that have been made in the prior month. This information must be entered into the Certification and Compliance Monitoring System (C2), or whatever reporting system is currently in place, on or before the fifteenth (15th) day of each month.

Once the Contractor has reported payments made to each Subcontractor, including zero dollar amount payments, the Subcontractor will receive an email and/or fax notification requesting that they log into the system and confirm payments received.

All monthly confirmations must be reported on or before the twentieth (20th) day of each month. Contractor and Subcontractor reporting to the C2 system must be completed by the twenty-fifth (25th) of each month or payments may be withheld.

All contracts between the Contractor and its Subcontractors must contain language requiring the Subcontractors to respond to email and/or fax notifications from the City requiring them to report payments received from the Contractor.

Access to the Certification and Compliance Monitoring System (C2), which is a web-based reporting system, can be found at: https://chicago.mwdbe.com

(Note: This site works for reporting all Subcontractor payments regardless of whether they are MBE/WBE/DBE or non-certified entities.)

If a Subcontractor has satisfactorily performed in accordance with the requirements of the Contract, Contractor must pay Subcontractor for such work, services, or materials within seven (7) calendar days of Contractor receiving payment from the City. Failure to comply with the foregoing will be deemed an event of default.

3.2.3. Prompt Payment to Subcontractors

3.2.3.1. Incorporation of Prompt Payment Language in Subcontracts

Contractor must state the requirements of these Prompt Payment provisions in all Subcontracts and purchase orders. If Contractor fails to incorporate these provisions in all Subcontracts and purchase orders, the provisions of this Section are deemed to be incorporated in all Subcontracts and purchase orders. Contractor and the Subcontractors have a continuing obligation to make prompt payment to their respective Subcontractors. Compliance with this obligation is a condition of Contractor's participation and that of its Subcontractors on this Contract.

3.2.3.2. Payment to Subcontractors Within Seven Days

The Contractor must make payment to its Subcontractors **within 7 days** of receipt of payment from the City for each invoice.

Provided the Subcontractor's performance has met the terms of the Contract Documents, and that Subcontractor has submitted its request for payment to the Contractor with such documentation as is reasonably necessary to substantiate such performance, the Contractor shall bill the City for such performance when the Contractor is first authorized under the payment schedule of the Contract to submit an invoice to the City for such performance. Contractor may only invoice the City at the rates contained in the Contract Documents.

3.2.3.2.1. Reporting Failures to Promptly Pay
The City posts payments to prime contractors on the web at http://webapps.cityofchicago.org/VCSearchWeb/org/cityofchicago/vcsearch/controller/payments/begin.do?agencyId=city.

If the Contractor, without reasonable cause, fails to make any payment to its Subcontractors and material suppliers **within 7 days** after receipt of payment under a City contract, the Contractor shall pay to its Subcontractors and material suppliers, in addition to the payment due them, interest in the amount of 2% per month, calculated from the expiration of the 7-day period until fully paid.

In the event that a Contractor fails to make payment to a Subcontractor within the 7-day period required above, the Subcontractor may notify the City by submitting a report form that may be downloaded from the DPS website at:

http://www.cityofchicago.org/content/dam/city/depts/dps/ContractAdministration/StandardFormsAgreements/Failure_to_Promtly_Pay_Fillable_Form_3_2013.pdf

The report will require the Subcontractor to affirm that (a) its invoice to the Contractor was included in the payment request submitted by the contractor to the City and (b) Subcontractor has not, at the time of the report, received payment from the contractor for that invoice. The report must reference the payment (voucher) number posted on-line by the City in the notice of the payment to the contractor.

Subcontractors are hereby reminded that per Chapters 1-21, "False Statements," and 1-22, "False Claims," of the Municipal Code of Chicago, making false statements or claims to the City are violations of law and subject to a range of penalties including fines and debarment.

3.2.3.2.2. Whistleblower Protection
Contractor shall not take any retaliatory action against any Subcontractor for reporting non-payment pursuant to this Sub-Section 3.2.3.2.2. Any such retaliatory action is an event of default under this Contract and is subject to the remedies set forth in Section 3.5 hereof, including termination. In addition to those remedies, any retaliatory action by a contractor may result in a contractor being deemed non-responsible for future City contracts or, if, in the sole judgment of the Chief Procurement Officer, such retaliatory action is egregious, the Chief Procurement Officer may initiate debarment proceedings against the contractor. Any such debarment shall be for a period of not less than one year.

3.2.3.3. Liquidated Damages for Failure to Promptly Pay
Much of the City's economic vitality derives from the success of its small businesses. The failure by contractors to pay their subcontractors in a timely manner, therefore, is clearly detrimental to the City. Inasmuch as the actual damages to the City due to such failure are uncertain in amount and difficult to prove, Contractor and City agree that the Chief Procurement Officer may assess liquidated damages against contractors who fail to meet their prompt payment requirements. Such liquidated damages shall be assessed to compensate the City for any and all damage incurred due to the failure of the Contractor to promptly pay its subcontractors, and does not constitute a penalty. Any and all such liquidated damages collected by the City shall be used to improve the administration and outreach efforts of the City's Small Business Program.

3.2.3.4. Action by the City
Upon receipt of a report of a failure to pay, the City will issue notice to the contractor, and provide the contractor with an opportunity to demonstrate reasonable cause for failing to make payment within applicable period set forth in the Contract. The Chief Procurement Officer, in his or her sole judgment, shall determine whether any cause for nonpayment provided by a contractor is reasonable. In the event that the contractor fails to demonstrate reasonable cause for failure to

make payment, the City shall notify the contractor that it will assess liquidated damages. Any such liquidated damages will be assessed according to the following schedule:

First Unexcused Report:	$50
Second Unexcused Report:	$100
Third Unexcused Report:	$250
Fourth Unexcused Report:	$500

3.2.3.5. Direct Payment to Subcontractors By City

The CPO may notify the Contractor that payments to the Contractor will be suspended if the CPO has determined that the Contractor has failed to pay any Subcontractor, employee, or workman, for work performed. If Contractor has not cured a failure to pay a Subcontractor, employee or workman within 10 days after receipt of such notice, the CPO may request the Comptroller to apply any money due, or that may become due, to Contractor under the Contract to the payment of such Subcontractors, workmen, and employees and the effect will be the same, for purposes of payment to Contractor of the Contract Price, as if the City had paid Contractor directly.

Further, if such action is otherwise in the City's best interests, the CPO may (but is not obligated to) request that the Comptroller make direct payments to Subcontractors for monies earned on contracts and the effect will be the same, for purposes of payment to Contractor of the Contract Price, as if the City had paid Contractor directly. The City's election to exercise or not to exercise its rights under this paragraph shall not in any way affect the liability of the Contractor or its sureties to the City or to any such Subcontractor, workman, or employee upon any bond given in connection with such Contract.

3.2.4. General Price Reduction – Automatic Eligibility for General Price Reductions

If at any time after the Bid Opening Date the Contractor makes a general reduction in the price of any goods, services or work covered by the Contract to its customers generally, an equivalent price reduction based on similar quantities and/or considerations shall apply to the Contract for the duration of the contract period (or until the price is further reduced). Such price reduction will be effective at the same time and in the same manner as the reduction in the price to customers generally.

For purpose of this provision, a general price reduction will mean any reduction in the price of an article or service offered (1) to Contractor's customers generally, or (2) in the Contractor's price schedule for the class of customers, i.e., wholesalers, jobbers, retailers, etc., which was used as the basis for bidding on this Contract. An occasional sale at a lower price, or sale of distressed merchandise at a lower price, would not be considered a general price reduction under this provision.

The Contractor must invoice at such reduced prices indicating on the invoice that the reduction is pursuant to the General Price Reduction provision of the Contract. The Contractor, in addition, must within 10 calendar days of any general price reduction notify the CPO of such reduction by letter. Failure to do so will be an event of default. Upon receipt of any such notice of a general price reduction all participating Departments will be duly notified by the CPO.

Failure to notify the CPO of a General Price Reduction is an event of default, and the City's remedies shall include a rebate to the City of any overpayments.

3.3. Compliance With All Laws

3.3.1. General

Contractor must observe and comply with all applicable federal, state, county and municipal laws, statutes, regulations, codes, ordinances and executive orders, in effect now or later and as amended whether or not they appear in the Contract Documents.

Provisions required by law, ordinances, rules, regulations, or executive orders to be inserted in the Contract are deemed inserted in the Contract whether or not they appear in the Contract.

Contractor must pay all taxes and obtain all licenses, certificates, and other authorizations required in connection with the performance of its obligations hereunder, and Contractor must require all Subcontractors to also do so. Failure to do so is an event of default and may result in the termination of this Contract.

3.3.2. Certification of Compliance with Laws
By entering into this Contract with the City, Contractor certifies to the best of its knowledge and belief that it, its principals and any subcontractors used in the performance of this contract, meet City requirements and have not violated any City or sister agency policy, codes, state, federal, or local laws, rules or regulations and have not been subject to any debarment, suspension or other disciplinary action by any government agency. Additionally, if at any time the contractor becomes aware of such information, it must immediately disclose it to the City.

3.3.3. Federal Affirmative Action
It is an unlawful employment practice for the Contractor (1) to fail or refuse to hire or to discharge any individual, or otherwise to discriminate against any individual with respect to his compensation, or the terms, conditions, or privileges of his employment, because of such individuals race, color, religion, sex, age, handicap or national origin; or (2) to limit, segregate, or classify his employees or applicants for employment in any way which would deprive or tend to deprive any individual of employment opportunities or otherwise adversely affect his status as an employee, because of such individuals race, color, religion, sex, age, handicap or national origin.

Contractor must comply with The Civil Rights Act of 1964, 42 U.S.C. sec. 2000 et seq. (1988), as amended. Attention is called to: Exec. Order No. 11,246,30 Fed. Reg. 12,319 (1965), reprinted in 42 U.S.C. 2000(e) note, as amended by Exec. Order No. 11,375,32 Fed. Reg. 14,303 (1967) and by Exec. Order No. 12,086,43 Fed. Reg. 46,501 (1978); Age Discrimination Act, 42 U.S.C. sec. 61 01-61 06 (1988); Rehabilitation Act of 1973, 29 U.S.C. sec. 793-794 (1988); Americans with Disabilities Act, 42 U.S.C. sec. 12102 et seq.; and 41 C.F.R. Part 60 et seq. (1990); and all other applicable federal laws, rules, regulations and executive orders.

3.3.4. Civil Rights Act of 1964, Title VI, Compliance With Nondiscrimination Requirements
During the performance of this contract, the contractor, for itself, its assignees, and successors in interest (hereinafter referred to as the "contractor") agrees as follows:

3.3.4.1. Compliance with Federal Nondiscrimination Requirements
The contractor will comply with federal nondiscrimination laws, regulations, and authorities, as they may be amended from time to time ("Acts and Regulations"), which include:

- Title VI of the Civil Rights Act of 1964 (42 U.S.C. § 2000d et seq., 78 stat. 252), (prohibits discrimination on the basis of race, color, national origin);
- 49 CFR part 21 (Non-discrimination In Federally-Assisted Programs of The Department of Transportation—Effectuation of Title VI of The Civil Rights Act of 1964);
- Section 504 of the Rehabilitation Act of 1973, (29 U.S.C. § 794 et seq.), as amended, (prohibits discrimination on the basis of disability); and 49 CFR part 27;
- The Age Discrimination Act of 1975, as amended, (42 U.S.C. § 6101 et seq.), (prohibits discrimination on the basis of age);
- The Civil Rights Restoration Act of 1987, (PL 100-209), (Broadened the scope, coverage and applicability of Title VI of the Civil Rights Act of 1964, The Age Discrimination Act of 1975 and Section 504 of the Rehabilitation Act of 1973, by expanding the definition of the terms “programs or activities” to include all of the programs or activities of the Federal-aid

recipients, sub-recipients and contractors, whether such programs or activities are Federally funded or not);

- Titles II and III of the Americans with Disabilities Act of 1990, which prohibit discrimination on the basis of disability in the operation of public entities, public and private transportation systems, places of public accommodation, and certain testing entities (42 U.S.C. §§ 12131 – 12189) as implemented by Department of Transportation regulations at 49 CFR parts 37 and 38;
- Executive Order 12898, Federal Actions to Address Environmental Justice in Minority Populations and Low-Income Populations, which ensures non-discrimination against minority populations by discouraging programs, policies, and activities with disproportionately high and adverse human health or environmental effects on minority and low-income populations;
- Executive Order 13166, Improving Access to Services for Persons with Limited English Proficiency, and resulting agency guidance, national origin discrimination under Title VI includes discrimination because of limited English proficiency (LEP). (70 Fed. Reg. at 74087 to 74100);
- Title IX of the Education Amendments of 1972, as amended, prohibits discrimination because of sex in education programs or activities (20 U.S.C. 1681 et seq);
- The Uniform Relocation Assistance and Real Property Acquisition Policies Act of 1970, (42 U.S.C. § 4601), (prohibits unfair treatment of persons displaced or whose property has been acquired because of Federal or Federal-aid programs and projects);
- Airport and Airway Improvement Act of 1982, (49 USC § 471, Section 47123), as amended, (prohibits discrimination based on race, religion, color, national origin, or sex in any activity carried out with a grant from the FAA).

3.3.4.2. Non-discrimination
The contractor, with regard to the work performed by it during the contract, will not discriminate on the grounds of race, color, or national origin in the selection and retention of subcontractors, including procurements of materials and leases of equipment. The contractor will not participate directly or indirectly in the discrimination prohibited by the Acts and the Regulations, including employment practices when the contract covers any activity, project, or program set forth in Appendix B of 49 CFR part 21 (Nondiscrimination in Federally-Assisted Programs of the US Department of Transportation).

3.3.4.3. Solicitations for Subcontracts, Including Procurements of Materials and Equipment
In all solicitations, either by competitive bidding, or negotiation made by the contractor for work to be performed under a subcontract, including procurements of materials, or leases of equipment, each potential subcontractor or supplier will be notified by the contractor of the contractor's obligations under this contract and the Acts and the Regulations relative to Non-discrimination on the grounds of race, color, or national origin.

3.3.4.4. Information and Reports
The contractor will provide all information and reports required by the Acts, the Regulations, and directives issued pursuant thereto and will permit access to its books, records, accounts, other sources of information, and its facilities as may be determined by the City or applicable federal agency (e.g. Federal Aviation Administration, Federal Highway Administration, Federal Transit Authority, Transportation Security Administration, Department of Housing and Urban Development, etc.) providing funding to the City department(s) on this contract to be pertinent to ascertain compliance with such Acts, Regulations, and instructions. Where any information required of a contractor is in the exclusive possession of another who fails or refuses to furnish the information,

the contractor will so certify to the sponsor or the federal agency, as appropriate, and will set forth what efforts it has made to obtain the information.

3.3.4.5. Sanctions for Noncompliance

In the event of a contractor's noncompliance with the Non-discrimination provisions of this contract, the City will impose such contract sanctions as it or the relevant federal funding agency may determine to be appropriate, including, but not limited to:

A. Withholding payments to the contractor under the contract until the contractor complies; and/or

B. Cancelling, terminating, or suspending a contract, in whole or in part.

3.3.4.6. Incorporation of Provisions

The contractor will include the provisions of above paragraphs 3.3.4.1, "Compliance With Federal Nondiscrimination Requirements" through 3.3.4.6 "Incorporation of Provisions" in every subcontract, including procurements of materials and leases of equipment, unless exempt by the Acts, the Regulations and directives issued pursuant thereto. The contractor will take action with respect to any subcontract or procurement as the sponsor or the applicable federal agency may direct as a means of enforcing such provisions including sanctions for noncompliance. Provided, that if the contractor becomes involved in, or is threatened with litigation by a subcontractor, or supplier because of such direction, the contractor may request the sponsor to enter into any litigation to protect the interests of the sponsor. In addition, the contractor may request the United States to enter into the litigation to protect the interests of the United States.

3.3.5. Other Non-Discrimination Requirements

3.3.5.1. Illinois Human Rights Act

3.3.5.1.1. Generally

Contractor must comply with the Illinois Human Rights Act, 775 ILCS 5/1-1 01 et seq., as amended and any rules and regulations promulgated in accordance therewith, including, but not limited to the Equal Employment Opportunity Clause, 44 III. Admin. Code 750 Appendix A, and as further described below.

Contractor must comply with the Public Works Employment Discrimination Act, 775 ILCS 10/0.01 et seq., as amended; and all other applicable state laws, rules, regulations and executive orders.

3.3.5.1.2. State of Illinois Duties of Public Contractors (44 Ill. Admin. Code 750 et seq.)

Contractor shall comply with its obligations for public contractors under state law. These rules require that contractor examine all its job classifications to determine whether minorities or women are underutilized, and if underutilization exists in any job classification, the contractor must take appropriate affirmative action. 44 Ill. Admin. Code 750.110. Underutilization means "having fewer minority/female workers in a particular job classification than would reasonably be expected by their availability. 44 Ill. Admin. Code 750.120.

When required by the state rules, contractors shall develop and implement written affirmative action plans to overcome underutilization of minorities and/or women, including, at minimum, a description of the contractor's workforce analysis and goals and timetables for recruitment efforts, per 44 Ill. Admin. Code 750.130. Contractors shall also state in all solicitations that all applicants be afforded equal employment opportunity without discrimination ("because of race, color, religion, sex, marital status, national origin or ancestry, citizenship status, age, physical or mental disability unrelated to ability, sexual orientation, military status, order of protection status or unfavorable discharge from military service," 44 Ill. Admin. Code 750.150), and advise in writing their personnel, referral sources, and labor organizations of the contractor's obligations under state law and any affirmative action plan.

3.3.5.1.3. State of Illinois Equal Employment Opportunity Clause
In the event of the Contractor's non-compliance with the provisions of this Equal Employment Opportunity Clause or the Illinois Human Rights Act, the Contractor may be declared ineligible for future contracts or subcontracts with the State of Illinois or any of its political subdivisions or municipal corporations, and the contract may be cancelled or voided in whole or in part, and other sanctions or penalties may be imposed or remedies invoked as provided by statute or regulation. During the performance of this contract, the Contractor agrees as follows:

A) That Contractor will not discriminate against any employee or applicant for employment because of race, color, religion, sex, sexual orientation, marital status, order of protection status, national origin or ancestry, citizenship status, age, physical or mental disability unrelated to ability, military status or an unfavorable discharge from military service; and, further, that he or she will examine all job classifications to determine if minority persons or women are underutilized and will take appropriate affirmative action to rectify any underutilization.

B) That, if Contractor hires additional employees in order to perform this contract or any portion of this contract, Contractor will determine the availability (in accordance with 44 III. Admin. Code Part 750) of minorities and women in the areas from which Contractor may reasonably recruit and Contractor will hire for each job classification for which employees are hired in a way that minorities and women are not underutilized.

C) That, in all solicitations or advertisements for employees placed Contractor or on Contractor's behalf, Contractor will state that all applicants will be afforded equal opportunity without discrimination because of race, color, religion, sex, sexual orientation, marital status, order of protection status, national origin or ancestry, citizenship status, age, physical or mental disability unrelated to ability, military status or an unfavorable discharge from military service.

D) That Contractor will send to each labor organization or representative of workers with which Contractor has or is bound by a collective bargaining or other agreement or understanding, a notice advising the labor organization or representative of the Contractor's obligations under the Illinois Human Rights Act and 44 III. Admin. Code Part 750. If any labor organization or representative fails or refuses to cooperate with the Contractor in Contractor's efforts to comply with the Act and this Part, the Contractor will promptly notify the Illinois Department of Human Rights and the City and will recruit employees from other sources when necessary to fulfill its obligations under the contract.

E) That Contractor will submit reports as required by 44 III. Admin. Code Part 750, furnish all relevant information as may from time to time be requested by the Illinois Department of Human Rights or the City, and in all respects comply with the Illinois Human Rights Act and 44 III. Admin. Code Part 750.

F) That Contractor will permit access to all relevant books, records, accounts and work sites by personnel of the City and the Illinois Department of Human Rights for purposes of investigation to ascertain compliance with the Illinois Human Rights Act and the Illinois Department of Human Right's Rules and Regulations.

G) That Contractor will include verbatim or by reference the provisions of this clause in every subcontract awarded under which any portion of the contract obligations are undertaken or assumed, so that the provisions will be binding upon the subcontractor. In the same manner as with other provisions of this contract, the Contractor will be liable for compliance with applicable provisions of this clause by subcontractors; and further it will promptly notify the City and the Illinois Department of Human Rights in the event any subcontractor fails or refuses to comply with the provisions. In addition, the Contractor will not utilize any subcontractor declared by the Illinois Human Rights Commission to be ineligible for contracts or subcontracts with the State of Illinois or any of its political subdivisions or municipal corporations.

3.3.5.2. Chicago Human Rights Ordinance MCC Ch. 2-160
Contractor must comply with the Chicago Human Rights Ordinance, MCC Ch. 2-160, Sect. 2-160-010 et seq., as amended; and all other applicable municipal code provisions, rules, regulations and executive orders.

Contractor must furnish or shall cause each of its Subcontractors to furnish such reports and information as requested by the Chicago Commission on Human Relations.

3.3.5.3. City of Chicago Equal Employment Opportunity Goals MCC 2-92-390
The City has established by ordinance equal employment opportunity goals for construction projects with an estimated contract value of $100,000 or more. The City's yearly goals, as a percentage of construction aggregated work hours per category of worker, are as follows:

A) 25% by minority journey workers and apprentices;

B) 7% by women journey workers and apprentices;

C) 40% by minority laborers; and

D) 10% by women laborers.

The Contractor is encouraged to meet or exceed these goals. Contractor shall also comply with the State of Illinois equal employment opportunity requirements, as set forth above.

3.3.5.4. Business Enterprises Owned by People With Disabilities (BEPD)
Pursuant to MCC 2-92-586, Contractor is strongly encouraged to subcontract with businesses certified as business enterprises owned or operated by people with disabilities ("BEPD") as defined in that section or MCC 2-92-337, and to use BEPD businesses as suppliers.

3.3.6. Wages
Contractor must pay the highest of (1) prevailing wage/Davis-Bacon rate, if applicable; (2) minimum wage specified by Mayoral Executive Order 2014-1; (3) Chicago Minimum Wage rate specified by MCC Chapter 6-105, or (4) the highest applicable State or Federal minimum wage.

3.3.6.1. Minimum Wage, Mayoral Executive Order 2014-1
Mayoral Executive Order 2014-1 provides for a fair and adequate Minimum Wage to be paid to employees of City contractors and subcontractors performing work on City contracts.

If this contract was advertised on or after October 1, 2014, Contractor must comply with Mayoral Executive Order 2014-1 and any applicable rules or regulations issued by the CPO. The Minimum Wage to be paid pursuant to the Order as of July 1, 2021 is **$14.75 per hour**. The Minimum Wage must be paid to:

All employees regularly performing work on City property or at a City jobsite.

All employees whose regular work entails performing a service for the City under a City contract.

Beginning on July 1, 2015, and every July 1 thereafter, the hourly wage specified by the Executive Order shall increase in proportion to the increase, if any, in the Consumer Price Index for All Urban Consumers most recently published by the Bureau of Labor Statistics of the United States Department of Labor. Any hourly wage increase shall be rounded up to the nearest multiple of $0.05. Such increase shall remain in effect until any subsequent adjustment is made. On or before June 1, 2015, and on or before every June 1 thereafter, the City shall make available to City Contractors a bulletin announcing the adjusted minimum hourly wages for the upcoming year.

The Minimum Wage is not required to be paid to employees whose work is performed in general support of contractor's operations, does not directly relate to the services provided to the City under the contract, and is included in the contract price as overhead, unless that employee's

regularly assigned work location is on City property or at a City jobsite. It is also not required to be paid by employers that are 501(c)(3) not-for-profits.

Except as further described, the Minimum Wage is also not required to be paid to categories of employees subject to subsection 4(a)(2), subsection 4(a)(3), subsection 4(d), subsection 4(e), or Section 6 of the Illinois Minimum Wage Law, 820 ILCS 105/1 et seq., in force as of the date of this Contract or as amended. Nevertheless, the Minimum Wage is required to be paid to those workers described in subsections 4(a)(2)(A) and 4(a)(2)(B) of the Illinois Minimum Wage Law.

Additionally, the Minimum Wage is not required to be paid to employees subject to a collective bargaining agreement that provides for different wages than those required by Mayoral Executive Order 2014-1, if that collective bargaining agreement was in force prior to October 1, 2014 or if that collective bargaining agreement clearly and specifically waives the requirements of the order.

If the payment of a prevailing wage is required and the prevailing wage is higher than the Minimum Wage, then the Contractor must pay the prevailing wage.

Contractors are reminded that they must comply with Municipal Code Chapter 6-105 establishing a minimum wage.

3.3.6.2. Chicago Paid Sick Leave Ordinance

Contractor understands that, to the extent the Chicago Paid Sick Leave Ordinance, codified at Municipal Code of Chicago Chapter 6-105, and as may be amended from time to time, applies to its activities, Contractor must comply with the Ordinance requirements.

3.3.6.3. Equal Pay

The Contractor will comply with all applicable provisions of the Equal Pay Act of 1963, 29 U.S.C. 206(d) and the Illinois Equal Pay Act of 2003, 820 ILCS 112/1, *et seq*., as amended, and all applicable related rules and regulations including but not limited to those set forth in 29 CFR Part 1620 and 56 Ill. Adm. Code Part 320.

3.3.7. Economic Disclosure Statement and Affidavit and Appendix A ("EDS")

Pursuant to MCC Ch. 2-154 and 65 ILCS 5/8-10-8.5 any person, business entity or agency submitting a bid or proposal to or contracting with the City of Chicago will be required to complete the Disclosure of Ownership Interests in the EDS. Failure to provide complete or accurate disclosure will render this Contract voidable by the City.

Contractors must complete an online EDS prior to the Bid Opening Date. Contractors are responsible for notifying the City and updating their EDS any time there is a change in circumstances that makes any information provided or certification made in an EDS inaccurate, obsolete or misleading. Failure to so notify the City and update the EDS is grounds for declaring the Contractor in default, terminating the Contract for default, and declaring the Contractor ineligible for future contracts.

Contractor makes certain representations and certifications that the City relies on in its decision to enter into a contract. The Laws and requirements that are addressed in the EDS include the following:

3.3.7.1. Business Relationships With Elected Officials MCC Sect. 2-156-030(b)

Pursuant to MCC Sect. 2-156-030(b), it is illegal for any elected official, or any person acting at the direction of such official, to contact either orally or in writing any other City official or employee with respect to any matter involving any person with whom the elected official has any business relationship that creates a financial interest on the part of the official, or the domestic partner or spouse of the official, or from whom or which he has derived any income or compensation during the preceding twelve months or from whom or which he reasonably expects to derive any income or compensation in the following twelve months. In addition, no elected official may participate in any discussion in any City Council committee hearing or in any City Council meeting or vote on any

matter involving the person with whom the elected official has any business relationship that creates a financial interest on the part of the official, or the domestic partner or spouse of the official, or from whom or which he has derived any income or compensation during the preceding twelve months or from whom or which he reasonably expects to derive any income or compensation in the following twelve months.

Violation of MCC Sect. 2-156-030 by any elected official with respect to this contract will be grounds for termination of this contract. The term financial interest is defined as set forth in MCC Chapter 2-156.

3.3.7.2. MCC 1-23 and 720 ILCS 5/33E Bribery, Debts, and Debarment Certification
The Contractor or each joint venture partner, if applicable, must complete the appropriate subsections in the EDS which certify that the Contractor or each joint venture partner, its agents, employees, officers and any subcontractors (a) have not been engaged in or been convicted of bribery or attempted bribery of a public officer or employee of the City of Chicago, the State of Illinois, any agency of the federal government or any state or local government in the United States or engaged in or been convicted of bid-rigging or bid-rotation activities as defined in this section as required by the Illinois Criminal Code; (b) do not owe any debts to the State of Illinois, in accordance with 65 ILCS 5/11-42.1-1 and (c) are not presently debarred or suspended; Certification Regarding Environmental Compliance; Certification Regarding Ethics and Inspector General; and Certification Regarding Court-Ordered Child Support Compliance.

Contractor, in performing under this contract shall comply with MCC Sect. 2-92-320, as follows:

No person or business entity shall be awarded a contract or sub-contract if that person or business entity: (a) has been convicted of bribery or attempting to bribe a public officer or employee of the City of Chicago, the State of Illinois, or any agency of the federal government or of any state or local government in the United States, in that officers or employee's official capacity; or (b) has been convicted of agreement or collusion among bidders or prospective bidders in restraint of freedom of competition by agreement to bid a fixed price, or otherwise; or (c) has made an admission of guilt of such conduct described in (a) or (b) above which is a matter of record but has not been prosecuted for such conduct; or (d) has violated MCC Sect. 2-92-610; or (e) has violated any regulation promulgated by the Chief Procurement Officer that includes ineligibility as a consequence of its violation; or (f) has committed, within a 24-month period, three or more violations of Chapter 6-105 of the MCC; or (g) has been debarred by any local, state or federal government agency from doing business with such government agency, for any reason or offense set forth in subsections (a), (b), or (c) of this section, or substantially equivalent reason or offense, for the duration of the debarment by such government agency.

For purposes of this section, where an official, agent or employee of a business entity has committed any offense under this section on behalf of such an entity and pursuant to the direction or authorization of a responsible official thereof, the business entity will be chargeable with the conduct.

One business entity will be chargeable with the conduct of an affiliated agency. Ineligibility under this section will continue for three (3) years following such conviction or admission. The period of ineligibility may be reduced, suspended, or waived by the CPO under certain specific circumstances. Reference is made to Section 2-92-320 for a definition of affiliated agency, and a detailed description of the conditions which would permit the CPO to reduce, suspend, or waive the period of ineligibility.

3.3.7.3. Federal Terrorist (No-Business) List
Contractor warrants and represents that neither Contractor nor an Affiliate, as defined below, appears on the Specially Designated Nationals List, the Denied Persons List, the Unverified List, the Entity List, or the Debarred List as maintained by the Office of Foreign Assets Control of the U.S.

Department of the Treasury or by the Bureau of Industry and Security of the U.S. Department of Commerce or their successors, or on any other list of persons or entities with which the City may not do business under any applicable law, rule, regulation, order or judgment.

"Affiliate" means a person or entity which directly, or indirectly through one or more intermediaries, controls, is controlled by or is under common control with Contractor. A person or entity will be deemed to be controlled by another person or entity if it is controlled in any manner whatsoever that results in control in fact by that other person or entity, either acting individually or acting jointly or in concert with others, whether directly or indirectly and whether through share ownership, a trust, a contract or otherwise.

3.3.7.4. Governmental Ethics Ordinance 2-156

Contractor must comply with MCC Ch. 2-156, Governmental Ethics, including but not limited to MCC Sect. 2-156-120 pursuant to which no payment, gratuity or offer of employment will be made in connection with any City contract, by or on behalf of a subcontractor to the prime Contractor or higher tier subcontractor or any person associated therewith, as an inducement for the award of a subcontract or order. Any contract negotiated, entered into, or performed in violation of any of the provisions of this Chapter will be voidable as to the City.

3.3.7.5. Lobbyists

Contractor must comply with Chapter 2-156 of the Municipal Code. Contractor acknowledges that any Agreement entered into, negotiated or performed in violation of any of the provisions of Chapter 2-156, including any contract entered into with any person who has retained or employed a non-registered lobbyist in violation of Section 2-156-305 of the Municipal Code is voidable as to the City.

3.3.8. Restrictions on Business Dealings

3.3.8.1. Prohibited Interests in City Contracts

No member of the governing body of the City or other unit of government and no other officer, employee or agent of the City or other unit of government who exercises any functions or responsibilities in connection with the work or services to which this Contract pertains is permitted to have any personal interest, direct or indirect, in this Contract. No member of or delegate to the Congress of the United States or the Illinois General Assembly and no alderman of the City or City employee is allowed to be admitted to any share or part of this Contract or to any financial benefit to arise from it.

3.3.8.2. Conflicts of Interest

The Contractor covenants that it, and to the best of its knowledge, its subcontractors if any, presently have no interest and will not acquire any interest, direct or indirect, in any enterprise, project or contract which would conflict in any manner or degree with the performance of the work, services or goods to be provided hereunder. The Contractor further covenants that in the performance of the Contract no person having any such interest will be employed, either by Contractor or any subcontractor, to perform any work or services under the Contract or have access to confidential information.

If the City determines that the Contractor does have such a conflict of interest, the City will notify the Contractor in writing, stating the basis for its determination. The Contractor will thereafter have 30 days in which to respond with reasons why the Contractor believes a conflict of interest does not exist. If the Contractor does not respond or if the City still reasonably determines a conflict of interest to exist, the Contractor must terminate its interest in the other enterprise, project, or contract. Further, if the City in the reasonable judgment of the CPO or Commissioner determines that any subcontractor's work or services for others conflicts with the work or services to be provided by them, upon request of the City, Contractor must require that subcontractor to terminate such other work or services immediately.

If Contractor or any subcontractors become aware of a conflict, they must immediately stop work on the activity causing the conflict and notify the City.

If Contractor or any subcontractors ("Contracting Parties") assist the City in determining the advisability or feasibility of a project or in recommending, researching, preparing, drafting or issuing a request for proposals, bid specifications for a project, or other procurement solicitation document, the Contracting Parties must not participate, directly or indirectly, as a prime, subcontractor, subconsultant or joint venturer in that project or in the preparation of a proposal or bid for that project during the term of this Contract or afterwards. The Contracting Parties may, however, assist the City in reviewing the proposals or bids for the project if none of the Contracting Parties have a relationship with the persons or entities that submitted the proposals or bids for that project.

3.3.8.3. Prohibition on Certain Contributions, Mayoral Executive Order 2011-4
No Contractor or any person or entity who directly or indirectly has an ownership or beneficial interest in Contractor of more than 7.5% ("Owners"), spouses and domestic partners of such Owners, Contractor's Subcontractors, any person or entity who directly or indirectly has an ownership or beneficial interest in any Subcontractor of more than 7.5% ("Sub-owners") and spouses and domestic partners of such Sub-owners (Contractor and all the other preceding classes of persons and entities are together, the "Identified Parties"), shall make a contribution of any amount to the Mayor of the City of Chicago (the "Mayor") or to his political fundraising committee during (i) the bid or other solicitation process for this Contract or Other Contract, including while this Contract or Other Contract is executory, (ii) the term of this Contract or any Other Contract between City and Contractor, and/or (iii) any period in which an extension of this Contract or Other Contract with the City is being sought or negotiated.

Contractor represents and warrants that since the date of public advertisement of the specification, request for qualifications, request for proposals or request for information (or any combination of those requests) or, if not competitively procured, from the date the City approached the Contractor or the date the Contractor approached the City, as applicable, regarding the formulation of this Contract, no Identified Parties have made a contribution of any amount to the Mayor or to his political fundraising committee.

Contractor shall not: (a) coerce, compel or intimidate its employees to make a contribution of any amount to the Mayor or to the Mayor's political fundraising committee; (b) reimburse its employees for a contribution of any amount made to the Mayor or to the Mayor's political fundraising committee; or (c) bundle or solicit others to bundle contributions to the Mayor or to his political fundraising committee.

The Identified Parties must not engage in any conduct whatsoever designed to intentionally violate this provision or Mayoral Executive Order No. 2011-4 or to entice, direct or solicit others to intentionally violate this provision or Mayoral Executive Order No. 2011-4.

Violation of, non-compliance with, misrepresentation with respect to, or breach of any covenant or warranty under this provision or violation of Mayoral Executive Order No. 2011-4 constitutes a breach and default under this Contract, and under any Other Contract for which no opportunity to cure will be granted. Such breach and default entitles the City to all remedies (including without limitation termination for default) under this Contract, under Other Contract, at law and in equity. This provision amends any Other Contract and supersedes any inconsistent provision contained therein.

If Contractor violates this provision or Mayoral Executive Order No. 2011-4 prior to award of the Contract resulting from this specification, the CPO may reject Contractor's bid.

For purposes of this provision:

"**Other Contract**" means any agreement entered into between the Contractor and the City that is (i) formed under the authority of MCC Ch. 2-92; (ii) for the purchase, sale or lease of real or personal property; or (iii) for materials, supplies, equipment or services which are approved and/or authorized by the City Council.

"**Contribution**" means a "political contribution" as defined in MCC Ch. 2-156, as amended.

"**Political fundraising committee**" means a "political fundraising committee" as defined in MCC Ch. 2-156, as amended.

3.3.9. Debts Owed to the City; Anti-Scofflaw, MCC Sect. 2-92-380

In addition to the certifications regarding debts owed to the City in the EDS, Contractor is subject to MCC Sect. 2-92-380.

Pursuant to MCC Sect. 2-92-380 and in addition to any other rights and remedies (including set-off) available to the City under this Contract or permitted at law or in equity, the City will be entitled to set off a portion of the contract price or compensation due under the Contract, in an amount equal to the amount of the fines and penalties for each outstanding parking violation complaint and the amount of any debt owed by the contracting party to the City. For purposes of this section, outstanding parking violation complaint means a parking ticket, notice of parking violation, or parking violation complaint on which no payment has been made or appearance filed in the Circuit Court of Cook County within the time specified on the complaint, and debt means a specified sum of money owed to the City for which the period granted for payment has expired.

However, no such debt(s) or outstanding parking violation complaint(s) will be offset from the contract price or compensation due under the contract if one or more of the following conditions are met:

the contracting party has entered into an agreement with the Department of Finance, or other appropriate City department, for the payment of all outstanding parking violation complaints and debts owed to the City and the Contracting party is in compliance with the agreement; or

the contracting party is contesting liability for or the amount of the debt in a pending administrative or judicial proceeding; or the contracting party has filed a petition in bankruptcy and the debts owed the City are dischargeable in bankruptcy.

3.3.10. Other City Ordinances and Policies

3.3.10.1. False Statements

False statements made in connection with this Contract, including statements in, omissions from and failures to timely update the EDS, as well as in any other affidavits, statements or Contract Documents constitute a material breach of the Contract. Any such misrepresentation renders the Contract voidable at the option of the City, notwithstanding any prior review or acceptance by the City of any materials containing such a misrepresentation. In addition, the City may debar Contractor, assert any contract claims or seek other civil or criminal remedies as a result of a misrepresentation (including costs of replacing a terminated Contractor pursuant to MCC Sect. 1-21-010.

3.3.10.2. MacBride Principles Ordinance, MCC Sect. 2-92-580

This law promotes fair and equal employment opportunities and labor practices for religious minorities in Northern Ireland and provides a better working environment for all citizens in Northern Ireland.

If this contract was let by a competitive bidding process as set forth in the Municipal Purchasing Act for Cities of 500,000 or More Population, in accordance with MCC Sect. 2-92-580 if the primary Contractor conducts any business operations in Northern Ireland, it is hereby required that the Contractor will make all reasonable and good faith efforts to conduct any business operations in Northern Ireland in accordance with the MacBride Principles for Northern Ireland as defined in Illinois Public Act 85-1390 (1988 III. Laws 3220).

The provisions of this Section will not apply to contracts for which the City receives funds administered by the United States Department of Transportation (USDOT) except to the extent Congress has directed that USDOT not withhold funds from states and localities that choose to implement selective purchasing policies based on agreement to comply with the MacBride Principles for Northern Ireland, or to the extent that such funds are not otherwise withheld by the USDOT.

3.3.10.3. City Hiring Plan Prohibitions

A. The City is subject to the June 16, 2014 "City of Chicago Hiring Plan" (the "2014 City Hiring Plan") entered in *Shakman v. Democratic Organization of Cook County*, Case No 69 C 2145 (United States District Court for the Northern District of Illinois). Among other things, the 2014 City Hiring Plan prohibits the City from hiring persons as governmental employees in non-exempt positions on the basis of political reasons or factors.

B. Contractor is aware that City policy prohibits City employees from directing any individual to apply for a position with Contractor, either as an employee or as a subcontractor, and from directing Contractor to hire an individual as an employee or as a Subcontractor. Accordingly, Contractor must follow its own hiring and contracting procedures, without being influenced by City employees. Any and all personnel provided by Contractor under this Contract are employees or Subcontractors of Contractor, not employees of the City of Chicago. This Contract is not intended to and does not constitute, create, give rise to, or otherwise recognize an employer-employee relationship of any kind between the City and any personnel provided by Contractor.

C. Contractor will not condition, base, or knowingly prejudice or affect any term or aspect of the employment of any personnel provided under this Contract, or offer employment to any individual to provide services under this Contract, based upon or because of any political reason or factor, including, without limitation, any individual's political affiliation, membership in a political organization or party, political support or activity, political financial contributions, promises of such political support, activity or financial contributions, or such individual's political sponsorship or recommendation. For purposes of this Contract, a political organization or party is an identifiable group or entity that has as its primary purpose the support of or opposition to candidates for elected public office. Individual political activities are the activities of individual persons in support of or in opposition to political organizations or parties or candidates for elected public office.

D. In the event of any communication to Contractor by a City employee or City official in violation of paragraph B above, or advocating a violation of paragraph C above, Contractor will, as soon as is reasonably practicable, report such communication to the Hiring Oversight Section of the City's Office of the Inspector General, and also to the head of the relevant City Department utilizing services provided under this Contract. Contractor will also cooperate with any inquiries by OIG Hiring Oversight.

3.3.10.4. Inspector General

It is the duty of any bidder, proposer or Contractor, all Subcontractors, every applicant for certification of eligibility for a City contract or program, and all officers, directors, agents, partners and employees of any bidder, proposer, Contractor, Subcontractor or such applicant to cooperate with the Inspector General in any investigation or hearing, if applicable, undertaken pursuant to MCC Ch. 2-56. Contractor understands and will abide by all provisions of MCC Ch. 2-56.

All subcontracts must inform Subcontractors of this provision and require understanding and compliance with them.

3.3.10.5. Duty to Report Corrupt Activity

Pursuant to MCC 2-156-018, it is the duty of the Contractor to report to the Inspector General, directly and without undue delay, any and all information concerning conduct which it knows to involve corrupt activity. "Corrupt activity" means any conduct set forth in Subparagraph (a)(1), (2) or (3) of Section 1-23-020 of the MCC. Knowing failure to make such a report will be an event of default under this Contract. Reports may be made to the Inspector General's toll free hotline, 866-IG-TIPLINE (866-448-4754).

3.3.10.6. Electronic Mail Communication

Electronic mail communication between Contractor and City employees must relate only to business matters between Contractor and the City.

3.3.10.7. EDS Update Obligation

Contractor is required to notify the City and update the EDS whenever there is a change in circumstances that makes any certification or information provided in an EDS inaccurate, obsolete or misleading. Failure to notify the City and update the EDS is grounds for declaring the Contractor in default, termination of the Contract for default, and declaring that the Contractor is ineligible for future contracts.

3.3.10.8. Wheel Tax (City Sticker)

Contractor must pay all Wheel Tax required by Chapter 3-56 of the MCC, as amended from time to time. Contractor should take particular notice of MCC 3-56-020 and MCC 3-56-125 which relate to payment of the tax for vehicles that are used on City streets or on City property by City residents. For the purposes of Chapter 3-56, any business that owns, leases or otherwise controls a place of business within the City wherein motor vehicles or semi-trailers are stored, repaired, serviced, or loaded or unloaded in connection with the business is also considered to be a City resident.

3.3.10.9. Policy Prohibiting Sexual Harassment (MCC 2-92-612)

For purposes of this section, the following definitions shall apply:

"Contract" means any contract, purchase order, construction project, or other agreement (other than a delegate agency contract or lease of real property or collective bargaining agreement) awarded by the city and whose cost is to be paid from funds belonging to or administered by the city.

"Contractor" means the person to whom a contract is awarded.

"Sexual harassment" means any unwelcome sexual advances or requests for sexual favors or conduct of a sexual nature when (i) submission to such conduct is made either explicitly or implicitly a term or condition of an individual's employment; or (ii) submission to or rejection of such conduct by an individual is used as the basis for any employment decision affecting the individual; or (iii) such conduct has the purpose or effect of substantially interfering with an individual's work performance or creating an intimidating, hostile or offensive working environment.

"Subcontractor" means any person that enters into a contract with a contractor to perform work on a contract.

Contractor shall, as prescribed by the Chief Procurement Officer, attest by affidavit that Contractor has a written policy prohibiting sexual harassment that shall include, at a minimum, the following information: (i) the illegality of sexual harassment; (ii) the definition of sexual harassment; and (iii) the legal recourse available for victims of sexual harassment. Contractor's affidavit is attached hereto in the Exhibit titled "Sexual Harassment Policy Affidavit".

Contractor's failure to have a written policy prohibiting sexual harassment as provided above shall constitute an event of default. In the event of default, the Chief Procurement Officer shall notify Contractor of such noncompliance and may, as appropriate: (i) issue Contractor an opportunity to

cure consistent with the default provisions in this Agreement; (ii) terminate the contract; or (iii) take any other action consistent with the default provisions in the contract. This section shall not be construed to prohibit the City from prosecuting any person who knowingly makes a false statement of material fact to the city pursuant to Chapter 1-21 of this Code, or from availing itself of any other remedies under contract or law.

3.3.10.10. Policy on Non-Disclosure of Salary History (MCC 2-92-385)

For purposes of this section, the following definitions shall apply:

"Contract" means any Agreement or transaction pursuant to which a contractor (i) receives City funds in consideration for services, work or goods provided or rendered, including contracts for legal or other professional services, or (ii) pays the City money in consideration for a license, grant or concession allowing it to conduct a business on City premises, and includes any contracts not awarded or processed by the Department of Procurement Services.

"Contractor" means the person to whom a contract is awarded.

As a condition of contract award, Contractor shall, as prescribed by the Chief Procurement Officer, attest by affidavit that Contractor has a policy that conforms to the following requirements:

(1) Contractor shall not screen job applicants based on their wage or salary history, including by requiring that an applicant's prior wages, including benefits or other compensation, satisfy minimum or maximum criteria; or by requesting or requiring an applicant to disclose prior wages or salary, either (i) as a condition of being interviewed, (ii) as a condition of continuing to be considered for an offer of employment, (iii) as a condition of an offer of employment or an offer of compensation, or (iv) as a condition of employment; and

(2) Contractor shall not seek an applicant's wage or salary history, including benefits or other compensation, from any current or former employer.

Contractor's affidavit is included in Appendix C to Contractor's Economic Disclosure Statement.

If Contractor violates the above requirements, Contractor may be deemed ineligible to contract with the City; any contract, extension, or renewal thereof awarded in violation of the above requirements may be voidable at the option of the City. Provided, however, that upon a finding of a violation by Contractor, no contract shall be voided, terminated, or revoked without consideration by the Chief Procurement Officer of such action's impact on the Contractor's MBE or WBE subcontractors.

3.3.11. Compliance with Environmental Laws and Related Matters

3.3.11.1. Definitions

For purposes of this section, the following definitions shall apply:

Environmental Agency: An Environmental Agency is any governmental agency having responsibility, in whole or in part, for any matter addressed by any Environmental Law. An agency need not be responsible only for matters addressed by Environmental Law(s) to be an Environmental Agency for purposes of this Contract.

Environmental Claim: An Environmental Claim is any type of assertion that Contractor or any Subcontractor is liable, or allegedly is liable, or should be held liable, under any Environmental Law, or that Contractor or any Subcontractor has or allegedly has violated or otherwise failed to comply with any Environmental Law. A non-exhaustive list of Environmental Claims includes, without limitation: demand letters, lawsuits and citations of any kind regardless of originating source.

Environmental Law: An Environmental Law is any Law that in any way, directly or indirectly, in whole or in part, bears on or relates to the environment or to human health or safety. A non-exhaustive list of Environmental Laws includes without limitation the Comprehensive Environmental

Response, Compensation and Liability Act, 42 U.S.C. 9601, *et seq*., the Resource Conservation and Recovery Act, 42 U.S.C. 6901*, et seq*., the Hazardous Materials Transportation Act, 49 U.S.C. 5101, *et seq*., the Clean Air Act, 42 U.S.C. 7401, *et seq*., the Federal Water Pollution Control Act, 33 U.S.C. 1251, *et seq*., the Occupational Safety and Health Act, 29 U.S.C. 651*, et seq*., the Illinois Environmental Protection Act, 415 ILCS 5/1, *et seq*., the Illinois Occupational Safety and Health Act, 820 ILCS 219/1, *et seq*., Chapters 7-28 and 11-4 of the Chicago Municipal Code, and all related rules and regulations.

Law(s): The word "Law" or "Laws," whether or not capitalized, is intended in the broadest possible sense, including without limitation all federal, state and local: statutes; ordinances; codes; rules; regulations; administrative and judicial orders of any kind; requirements and prohibitions of permits, licenses or other similar authorizations of any kind; court decisions; common law; and all other legal requirements and prohibitions.

Routine: As applied to reports or notices, "routine" refers to a report or notice that must be made, submitted or filed on a regular, periodic basis (e.g., quarterly, annually, biennially) and that in no way arises from a spill or other release or any kind, or from an emergency response situation, or from any actual, possible or alleged noncompliance with any Environmental Law.

3.3.11.2. Joint Ventures

If Contractor or any Subcontractor is a joint venture, then every party to every such joint venture is deemed a Subcontractor for purposes of this section, which is entitled "Compliance with Environmental Laws and Related Matters" and every subsection thereof.

3.3.11.3. Compliance With Environmental Laws

As part of or in addition to its obligation to observe and comply with all applicable laws, Contractor must observe and comply with all applicable Environmental Laws and ensure that all Subcontractors observe and comply with all applicable Environmental Laws.

Any noncompliance, by Contractor or any Subcontractor, with any Environmental Law during the time that this Contract is effective is an event of default, regardless of whether the noncompliance relates to performance of this Contract. This includes without limitation any failure by Contractor or any Subcontractor to keep current, throughout the term of this Contract, all insurance certificates, permits and other authorizations of any kind that are required, directly or indirectly, by any Environmental Law.

3.3.11.4. Costs

Any cost arising directly or indirectly, in whole or in part, from any noncompliance, by Contractor or any Subcontractor, with any Environmental Law, will be borne by the Contractor and not by the City. This includes, but is not limited to, any cost associated with removal of waste or other material from a facility lacking any required permit. No provision of this Contract is intended to create or constitute an exception to this provision.

3.3.11.5. Proof of Noncompliance; Authority; Cure

Any adjudication, whether administrative or judicial, against Contractor or any Subcontractor, for a violation of any Environmental Law, is sufficient proof of noncompliance, and therefore of an event of default, for purposes of this Contract.

Any citation issued to/against Contractor or any Subcontractor, by any government agent or entity, alleging a violation of any Environmental Law, is sufficient proof of noncompliance for purposes of this Contract, and therefore of an event of default, if the citation contains or is accompanied by, or the City otherwise obtains, any evidence sufficient to support a reasonable conclusion that a violation has occurred.

Any other evidence of noncompliance with any Environmental Law is sufficient proof of noncompliance for purposes of this Contract, and therefore of an event of default, if the evidence is sufficient to support a reasonable conclusion that noncompliance has occurred.

The CPO shall have the authority to determine whether noncompliance with an Environmental Law has occurred, based on any of the foregoing types of proof. Upon determining that noncompliance has occurred, s/he may in his/her discretion declare an event of default and may in his/her discretion offer Contractor an opportunity to cure the event of default, such as by taking specified actions, which may include without limitation ceasing and desisting from utilizing a Subcontractor.

The CPO may consider many factors in determining whether to declare an event of default, whether to offer an opportunity to cure, and if so any requirements for cure, including without limitation: the seriousness of the noncompliance, any effects of the noncompliance, Contractor's and/or Subcontractor's history of compliance or noncompliance with the same or other Laws, Contractor's and/or Subcontractor's actions or inaction towards mitigating the noncompliance and its effects, and Contractor's or Subcontractor's actions or inaction towards preventing future noncompliance.

3.3.11.6. Copies of Notices and Reports; Related Matters

If any Environmental Law requires Contractor or any Subcontractor to make, submit or file any non-Routine notice or report of any kind, to any Environmental Agency or other person, including without limitation any agency or other person having any responsibility for any type of emergency response activity, then Contractor must deliver a complete copy of the notice or report (or, in the case of legally required telephonic or other oral notices or reports, a comprehensive written summary of same) to the Law Department within 24 hours of making, submitting or filing the original report.

Additionally, to the extent not already achieved by Contractor's compliance with this paragraph 3.3.11.6 and paragraph 3.3.11.8, Contractor must notify the Commissioner of the Department, within 24 hours of learning of any of the following:

(i) any release, suspected release, or threatened release of any waste or other material relating to the work performed under the Contract;

(ii) any notice of any kind received by Contractor, any Subcontractor, or any employee or agent of Contractor or any Subcontractor, from an Environmental Agency or any other person, of or relating to any release, suspected release, or threatened release of any waste or other material relating to the work performed under the Contract.

This notification must be in writing, must be submitted by a fast method such as email, and must include, to the best of Contractor's knowledge at the time of submittal: the types and amounts of the waste or other material at issue; the location; the cause and any contributing factors; all actions taken, being taken, and intended to be taken by Contractor and any Subcontractors; and a copy of any notice received by Contractor, any Subcontractor, or any employee or agent of Contractor or any Subcontractor. Contractor must also provide written updates to the Commissioner by email or other method as indicated by the Commissioner whenever Contractor becomes aware of information that is different from or additional to the information provided in the initial notification.

The requirements of this provision apply, regardless of whether the subject matter of the required notice or report concerns performance of this Contract.

Failure to comply with any requirement of this provision is an event of default.

3.3.11.7. Requests for Documents and Information

If the Commissioner requests documents or information of any kind that directly or indirectly relate(s) to performance of this Contract, Contractor must obtain and provide the requested documents and/or information to the Commissioner within 3 business days.

Failure to comply with any requirement of this provision is an event of default.

3.3.11.8. Environmental Claims and Related Matters

Within 24 hours of receiving, or of any Subcontractor's receiving, notice of any Environmental Claim, Contractor must submit copies of all documents constituting or relating to the Environmental Claim to the Law Department. Thereafter, Contractor must submit copies of related documents if requested by the Law Department. These requirements apply, regardless of whether the Environmental Claim concerns performance of this Contract.

Failure to comply with any requirement of this provision is an event of default.

3.3.11.9. Preference for Recycled Materials

To the extent practicable and economically feasible and to the extent that it does not reduce or impair the quality of any work or services, Contractor must use recycled products in performance of the Contract pursuant to U.S. Environment Protection Agency (U.S. EPA) guidelines at 40 CFR Parts 247-253, which implement section 6002 of the Resource Conservation and Recovery Act, as amended, 42 USC § 6962.

3.3.11.10. No W aste Disposal in Public Way MCC 11-4-1600(E)

Contractor warrants and represents that it, and to the best of its knowledge, its Subcontractors have not violated and are not in violation of the following sections of the Code (collectively, the Waste Sections):

7-28-390 Dumping on public way;
7-28-440 Dumping on real estate without permit;
11-4-1410 Disposal in waters prohibited;
11-4-1420 Ballast tank, bilge tank or other discharge;
11-4-1450 Gas manufacturing residue;
11-4-1500 Treatment and disposal of solid or liquid waste;
11-4-1530 Compliance with rules and regulations required;
11-4-1550 Operational requirements; and
11-4-1560 Screening requirements.

During the period while this Contract is executory, Contractor's or any Subcontractor's violation of the Waste Sections, whether or not relating to the performance of this Contract, constitutes a breach of and an event of default under this Contract, for which the opportunity to cure, if curable, will be granted only at the sole discretion of the CPO. Such breach and default entitles the City to all remedies under the Contract, at law or in equity.

This section does not limit the Contractor's and its Subcontractors' duty to comply with all applicable federal, state, county and municipal laws, statutes, ordinances and executive orders, in effect now or later, and whether or not they appear in this Contract.

Non-compliance with these terms and conditions may be used by the City as grounds for the termination of this Contract, and may further affect the Contractor's eligibility for future contract awards.

3.3.11.11 COVID-19 Vaccination Policy

Contractor will comply with the City's COVID-19 Vaccination Policy, effective October 8, 2021, and as may be amended from time to time.

3.4. Contract Disputes

3.4.1. Procedure for Bringing Disputes to the Department

The Contractor and using Department must attempt to resolve all disputes arising under this Contract in good faith, taking such measures as, but not limited to investigating the facts of the dispute and meeting to discuss the issue(s).

In order to bring a dispute to the Commissioner of a Department, Contractor must provide a general statement of the basis for its claim, the facts underlying the claim, reference to the applicable Contract provisions, and all documentation that describes, relates to and supports the claim. By submitting a Claim, the Contractor certifies that:

A. The Claim is made in good faith;

B. The Claim's supporting data are accurate and complete to the best of the person's knowledge and belief;

C. The amount of the Claim accurately reflects the amount that the claimant believes is due from the City; and

D. The certifying person is duly authorized by the claimant to certify the Claim.

The Commissioner shall have 30 days from receipt of the Claim to render a written "final decision of the Commissioner" stating the Commissioner's factual and contractual basis for the decision. However, the Commissioner may take an additional period, not to exceed 10 days, to render the final decision. If the Commissioner does not render a "final decision of the Commissioner" within the prescribed time frame, then the Claim should be deemed denied by the Commissioner.

3.4.2. Procedure for Bringing Disputes before the CPO

Only after the Commissioner has rendered a final decision denying the Contractor's claim may a dispute be brought before the CPO.

If the Contractor and using Department are unable to resolve the dispute, prior to seeking any judicial action, the Contractor must and the using Department may submit the dispute the CPO for an administrative decision based upon the written submissions of the parties. The party submitting the dispute to the CPO must include documentation demonstrating its good faith efforts to resolve the dispute and either the other party's failure to exercise good faith efforts or both parties' inability to resolve the dispute despite good faith efforts.

The decision of the CPO is final and binding. The sole and exclusive remedy to challenge the decision of the CPO is judicial review by means of a common law writ of certiorari.

The administrative process is described more fully in the "Regulations of the Department of Procurement Services for Resolution of Disputes between Contractors and the City of Chicago", which are available in City Hall, 121 N. LaSalle Street, Room 103, Bid and Bond Room, and on-line at:

http://www.cityofchicago.org/content/dam/city/depts/dps/RulesRegulations/Dispute_Regulations_2002.pdf

3.5. Events of Default and Termination

3.5.1. Events of Default

In addition to any breach of contract and events of default described within the Contract Documents, the following constitute an event of default:

A. Any material misrepresentation, whether negligent or willful and whether in the inducement or in the performance, made by Contractor to the City.

B. Contractor's material failure to perform any of its obligations under this Contract including the following:

C. Failure to perform the Services with sufficient personnel and equipment or with sufficient material to ensure the timely performance of the Services

D. Failure to have and maintain all professional licenses required by law to perform the Services;

E. Failure to timely perform the Services;

F. Failure to perform the Services in a manner reasonably satisfactory to the Commissioner or the CPO or inability to perform the Services satisfactorily as a result of insolvency, filing for bankruptcy or assignment for the benefit of creditors;

G. Failure to promptly re-perform, as required, within a reasonable time and at no cost to the City, Services that are rejected as erroneous or unsatisfactory;

H. Discontinuance of the Services for reasons within Contractor's reasonable control;

I. Failure to update promptly EDS(s) furnished in connection with this Contract when the information or responses contained in it or them is no longer complete or accurate;

J. Failure to comply with any other term of this Contract, including the provisions concerning insurance, warranty and nondiscrimination; and

K. Any change in ownership or control of Contractor without the prior written approval of the CPO, which approval the CPO will not unreasonably withhold.

L. Contractor's default under any other Contract it may presently have or may enter into with the City during the life of this Contract. Contractor acknowledges and agrees that in the event of a default under this Contract the City may also declare a default under any such other agreements.

M. Contractor's repeated or continued violations of City ordinances unrelated to performance under the Contract that in the opinion of the CPO indicate a willful or reckless disregard for City laws and regulations.

N. Contractor's use of a subcontractor that is currently debarred by the City or otherwise ineligible to do business with the City.

3.5.2. Cure or Default Notice

The occurrence of any event of default permits the City, at the City's sole option, to declare Contractor in default.

The CPO will give Contractor written notice of the default, either in the form of a cure notice ("Cure Notice"), or, if no opportunity to cure will be granted, a default notice ("Default Notice").

If a Cure Notice is sent, the CPO may in his/her sole discretion will give Contractor an opportunity to cure the default within a specified period of time, which will typically not exceed 30 days unless extended by the CPO. The period of time allowed by the CPO to cure will depend on the nature of the event of default and the Contractor's ability to cure. In some circumstances the event of default may be of such a nature that it cannot be cured. Failure to cure within the specified time may result in a Default Notice to the Contractor.

Whether to issue the Contractor a Default Notice is within the sole discretion of the CPO and neither that decision nor the factual basis for it is subject to review or challenge under the Disputes provision of this Contract

If the CPO issues a Default Notice, the CPO will also indicate any present intent the CPO may have to terminate this Contract. The decision to terminate is final and effective upon giving the notice. If the CPO decides not to terminate, this decision will not preclude the CPO from later deciding to terminate the Contract in a later notice, which will be final and effective upon the giving of the notice or on such later date set forth in the Default Notice.

When a Default Notice with intent to terminate is given, Contractor must discontinue any Services, unless otherwise directed in the notice.

3.5.3. Remedies
After giving a Default Notice, the City may invoke any or all of the following remedies:

A. The right to take over and complete the Services, or any part of them, at Contractor's expense and as agent for Contractor, either directly or through others, and bill Contractor for the cost of the Services, and Contractor must pay the difference between the total amount of this bill and the amount the City would have paid Contractor under the terms and conditions of this Contract for the Services that were assumed by the City as agent for Contractor

B. The right to terminate this Contract as to any or all of the Services yet to be performed effective at a time specified by the City;

C. The right to seek specific performance, an injunction or any other appropriate equitable remedy;

D. The right to seek money damages;

E. The right to withhold all or any part of Contractor's compensation under this Contract;

F. The right to deem Contractor non-responsible in future contracts to be awarded by the City.

3.5.4. Non-Exclusivity of Remedies
The remedies under the terms of this Contract are not intended to be exclusive of any other remedies provided, but each and every such remedy is cumulative and is in addition to any other remedies, existing now or later, at law, in equity or by statute. No delay or omission to exercise any right or power accruing upon any event of default impairs any such right or power, nor is it a waiver of any event of default nor acquiescence in it, and every such right and power may be exercised from time to time and as often as the City considers expedient.

3.5.5. City Reservation of Rights
If the CPO considers it to be in the City's best interests, the CPO may elect not to declare default or to terminate this Contract. The parties acknowledge that this provision is solely for the benefit of the City and that if the City permits Contractor to continue to provide the Services despite one or more events of default, Contractor is in no way relieved of any of its responsibilities, duties or obligations under this Contract, nor does the City waive or relinquish any of its rights.

3.5.6. Early Termination
The City may terminate this Contract, in whole or in part, at any time by a notice in writing from the City to the Contractor. The effective date of termination will be the date the notice is received by the Contractor or the date stated in the notice, whichever is later.

After the notice is received, the Contractor must restrict its activities, and those of its Subcontractors, to activities pursuant to direction from the City. No costs incurred after the effective date of the termination are allowed unless the termination is partial.

Contractor is not entitled to any anticipated profits on services, work, or goods that have not been provided. The payment so made to the Contractor is in full settlement for all services, work or goods satisfactorily provided under this Contract. If the Contractor disputes the amount of compensation determined by the City to be due Contractor, then the Contractor must initiate dispute settlement procedures in accordance with the Disputes provision.

If the City's election to terminate this Contract for default pursuant to the default provisions of the Contract is determined in a court of competent jurisdiction to have been wrongful, then in that case the termination is to be deemed to be an early termination pursuant to this Early Termination provision.

3.6. Department-specific Requirements
Contractor must comply with the relevant user Department's specific requirements in the performance of this Contract if applicable.

3.6.1. Department of Aviation Standard Requirements

For purposes of this section "Airport" refers to either Midway International Airport or O'Hare International Airport, which are both owned and operated by the City of Chicago.

3.6.1.1. Confidentiality of Airport Security Data

Contractor has an ongoing duty to protect confidential information, including but not limited to any information exempt from disclosure under the Illinois Freedom of Information Act such as information affecting security of the airport ("Airport Security Data"). Airport Security Data includes any Sensitive Security Information as defined by 49 CFR Part 1520. Contractor acknowledges that information provided to, generated by, or encountered by Contractor may include Airport Security Data. If Contractor fails to safeguard the confidentiality of Airport Security Data, Contractor is liable for the reasonable costs of actions taken by the City, the airlines, the Federal Aviation Administration ("FAA"), or the Transportation Security Administration ("TSA") that the applicable entity, in its sole discretion, determines to be necessary as a result, including without limitation the design and construction of improvements, procurement and installation of security devices, and posting of guards. All Subcontracts or purchase orders entered into by the Contractor, with parties providing material, labor or services to complete the Work, must contain the language of this section. If the Contractor fails to incorporate the required language in all Subcontracts or purchase orders, the provisions of this section are deemed incorporated in all Subcontracts or purchase orders.

3.6.1.2. Aviation Security

This Contract is subject to the airport security requirements of 49 United States Code, Chapter 449, as amended, the provisions of which govern airport security and are incorporated by reference, including without limitation the rules and regulations in 14 CFR Part 107 and all other applicable rules and regulations promulgated under them. All employees providing services at the City's airports must be badged by the City. (See Airport Security Badges.) Contractor, Subcontractors and the respective employees of each are subject to such employment investigations, including criminal history record checks, as the Administrator of the Federal Aviation Administration ("FAA"), the Under Secretary of the Transportation Security Administration ("TSA"), and the City may deem necessary. Contractor, Subcontractors, their respective employees, invitees and all other persons under the control of Contractor must comply strictly and faithfully with any and all rules, regulations and directions which the Commissioner, the FAA, or the TSA may issue from time to time may issue during the life of this Contract with regard to security, safety, maintenance and operation of the Airport and must promptly report any information regarding suspected violations in accordance with those rules and regulations.

Gates and doors that permit entry into restricted areas at the Airport must be kept locked by Contractor at all times when not in use or under Contractor's constant security surveillance. Gate or door malfunctions must be reported to the Commissioner without delay and must be kept under constant surveillance by Contractor until the malfunction is remedied.

3.6.1.3. Airport Security Badges

As part of airport operations and security, the Contractor must obtain from the airport badging office Airport Security Badges for each of his employees, subcontractors, material men, invitees or any person(s) over whom Contractor has control, which must be visibly displayed at all times while at the airport. No person will be allowed beyond security checkpoints without a valid Airport Security Badge. Each such person must submit signed and properly completed application forms to receive Airport Security Badges. Additional forms and tests may be required to obtain Airport Drivers Certification and Vehicle Permits. The application forms will solicit such information as the Commissioner may require in his discretion, including but not limited to name, address, date of birth (and for vehicles, driver's license and appropriate stickers). The Contractor is responsible for requesting and completing the form for each employee and subcontractor employee who will be working at the Airport and all vehicles to be used on the job site. Upon signed approval of the

application by the Commissioner or his designee, the employee will be required to attend a presentation regarding airport security and have his or her photo taken for the badge. The Commissioner may grant or deny the application in his sole discretion. The Contractor must make available to the Commissioner, within one day of request, the personnel file of any employee who will be working on the project.

As provided in Aviation Security above, in order for a person to have an Airport Security Badge that allows access to the airfield or aircraft, a criminal history record check (CHRC) conducted by the Department of Aviation will also be required. The CHRC will typically include a fingerprint analysis by the Federal Bureau of Investigation and such other procedures as may be required by the TSA.

Airport Security Badges, Vehicle Permits and Driver's Licenses will only be issued based upon properly completed application forms. Employees or vehicles without proper credentials may be removed from the secured area and may be subject to fine or arrest. Contractor will be jointly and severally liable for any fines imposed on its employees or its Subcontractor's employees.

In addition to other rules and regulations, the following rules related to Airport Security Badges, Vehicle Permits and Driver's Licenses must be adhered to:

A. Each person must wear and display his or her Airport Security Badge on their outer apparel at all times while at the airport.

B. All individuals operating a vehicle on the Aircraft Operations Area (AOA) must be familiar and comply with motor driving regulations and procedures of the State of Illinois, City of Chicago and the Department of Aviation. The operator must be in possession of a valid, State-issued Motor Vehicle Operators Driver's License. All individuals operating a vehicle on the AOA without an escort must also be in possession of a valid Aviation-issued Airport Driver's Permit.

C. All operating equipment must have an Airport Vehicle Access Permit affixed to the vehicle at all times while operating on the Airport. All required City stickers and State Vehicle Inspection stickers must be valid.

D. Individuals must remain within their assigned area and haul routes unless otherwise instructed by the Department of Aviation.

E. The Contractors personnel who function as supervisors, and those that escort the Contractors equipment/operators to their designated work sites, may be required to obtain an added multi-area access designation on their personnel Airport Security Badge which must also be displayed while on the AOA.

3.6.1.4. General Requirements Regarding Airport Operations

3.6.1.4.1. Priority of Airport Operations

Where the performance of the Contract may affect airport operation, the Contractor must cooperate fully with the Commissioner and his representatives in all matters pertaining to public safety and airport operation. Whether or not measures are specifically required by this Contract, the Contractor at all times must maintain adequate protection to safeguard aircraft, the public and all persons engaged in the work and must take such precaution as will accomplish such end, without interference with aircraft, the public, or maintenance and operations of the airport.

The Contractor's attention is drawn to the fact that airport facilities and infrastructure, including but not limited to runways, taxiways, vehicular roadways, loadways, loading aprons, concourses, holdrooms, gates, and passenger right-of-ways, are being used for scheduled and unscheduled civilian air transportation. Arrivals and departures are under the control of the FAA control tower(s). Use of the Airport for air transportation takes precedence over all of the Contractor's operations. No extra compensation will be allowed for any delays brought about

by the operations of the Airport which require that Contractor's work must be interrupted or moved from one part of the work site to another.

3.6.1.4.2. Interruption of Airport Operations
If Contractor requires interruption of Airport facilities or utilities in order to perform work, Contractor must notify the Deputy Commissioner in charge of the project at least five (5) working days in advance of such time and must obtain the Deputy Commissioner's approval prior to interrupting the service. Interruption of service must be kept to an absolute minimum, and to the extent practicable the work which occasions such interruptions must be performed in stages in order to reduce the time of each interruption. In case of interruptions of electrical services, service must be restored prior to sunset of the same day.

Prior to start of work, the Contractor must request of the Deputy Commissioner in charge of the project to provide specific requirements and instructions which are applicable to the particular work site areas, including, but not limited to, areas available for storage of any equipment, materials, tools and supplies needed to perform the work. Contractors must advise the Deputy Commissioner in charge of the project of the volume of equipment, materials, tools, and supplies that will be required in the secured areas of the airport in order to make arrangements for inspection of such equipment, materials, tools, and supplies at a security checkpoint.

3.6.1.4.3. Safeguarding of Airport Property and Operations
The Contractor must not permit or allow its employees, subcontractors, material men, invitees or any other persons over whom Contractor has control to enter or remain upon, or to bring or permit any equipment, materials, tools, or supplies to remain upon any part of the work site if any hazard to aircraft, threat to airport security, or obstruction of airport maintenance and operations, on or off the ground, would be created in the opinion of either the Commissioner or the Deputy Commissioner. Contractors must safeguard, and may be required to account for, all items brought beyond a security checkpoint, especially with respect to tools used in a terminal building.

3.6.1.4.4. Work on the Airfield
For any work on the airfield, between sunset and sunrise, any equipment and materials stored outside must be marked with red obstruction lights acceptable to the Commissioner and in conformity with all FAA requirements, including Advisory Circular 150/5345-43F. All obstruction lights must be kept continuously in operation between sunset and sunrise 7 days a week and also during any daylight periods when aircraft ceiling is below 500 feet and visibility is less than 5 miles. Information on ceiling and visibility may be obtained by the Contractor on request at the office of the Deputy Commissioner of Operations or from the FAA Control Tower Operator. Proper compliance with these obstruction light requirements is essential to the protection of aircraft and human life and the Contractor has the responsibility of taking the initiative at all times to be aware of ceiling and visibility conditions, without waiting for the FAA Control Tower Operator or any other City representative to ask the Contractor to post obstruction lights.

For any work on the airfield, the Contractor must furnish aircraft warning flags, colored orange and white, in two sizes, one size 2' x 3' for hand use, and one size 3' x 5'. Each separate group or individual in all work areas, regardless of whether or not near runways, taxiways or aprons, must display a flag which must be maintained vertical at all times. Each truck or other piece of equipment of the Contractor must have attached to it, in a vertical and clearly visible position, a warning flag of the larger size. Except as otherwise agreed by the Commissioner or his designee, all cranes or booms used for construction work on the airfield must be lowered to ground level and moved 200 feet off the runways, taxiways and aprons during all hours of

darkness and during all daylight hours when the aircraft ceiling is below the minimums specified in this section.

The Contractor acknowledges the importance of fully complying with the requirements of this section in order to protect aircraft and human life, on or off the ground. Failure on the part of the Contractor to perform the work in accordance with the provisions of this section and to enforce same with regard to all subcontractors, material men, laborers, invitees and all other persons under the Contractor's control is an event of default.

3.6.1.4.5. Parking Restrictions

Prior to commencing work, the Contractor must provide the Deputy Commissioner in charge of the project with an estimate of the number of vehicles that will require parking. Contractors are encouraged to provide employee parking elsewhere and shuttle their employees to the work site. The Department of Aviation may, but is not required to, provide parking areas for a limited number of vehicles in designated storage areas. All other vehicles must be parked in the public parking lots at the Airport, and there will be no reduced rate or complimentary parking for such vehicles. Employees must not, at any time, park their personal automobiles, no matter how short the duration, in any drive, road, or any other non-parking lot location at the airport. Such vehicles will be subject to immediate towing at the employee's expense.

3.6.1.5. General Civil Rights (Airport and Airway Improvement Act of 1982, Section 520)

The contractor agrees that it will comply with pertinent statutes, Executive Orders and such rules as are promulgated to ensure that no person shall, on the grounds of race, creed, color, national origin, sex, age, or handicap be excluded from participating in any activity conducted with or benefiting from Federal assistance.

This provision binds the contractors from the bid solicitation period through the completion of the contract. This provision is in addition to that required of Title VI of the Civil Rights Act of 1964.

3.6.2. Emergency Management and Communications (OEMC) Security Requirements

3.6.2.1. Identification of Workers and Vehicles

All employees and vehicles working within O.E.M.C facilities must be properly identified. All vehicles and personnel passes will be issued to the Contractor by the Executive Director, as required. Contractor, Subcontractors, and employees must return identification material to the Executive Director upon completion of their respective work within the Project, and in all cases, the Contractor must return all identification material to the Executive Director after completion of the Project. Final Contract Payment will not be made until all passes issued have been returned to O.E.M.C Security.

3.6.2.2. Access to Facilities

For purposes of this section, "employee" refers to any individual employed or engaged by Contractor or by any Subcontractor. If the Contractor, or any employee, in the performance of this Contract, has or will have access to an Office of Emergency Management and Communications (O.E.M.C) facility, the City may conduct such background and employment checks, including criminal history record checks and work permit documentation, as the Executive Director of the Office of Emergency Management and Communications and the City may deem necessary, on the Contractor, any Subcontractor, or any of their respective employees. The Executive Director of the Office of Emergency Management and Communications has the right to require the Contractor to supply or provide access to any additional information the Executive Director deems relevant. Before beginning work on the project, Contractor must:

Provide the City with a list of all employees requiring access to enable the City to conduct such background and employment checks;

Deliver to the City consent forms signed by all employees who will work on the project consenting to the City's and the Contractor's performance of the background checks described in this Section; and

Deliver to the City consent forms signed by all employees who will require access to the O.E.M.C facility consenting to the searches described in this Section.

The Executive Director may preclude Contractor, any Subcontractor, or any employee from performing work on the project. Further, the Contractor must immediately report any information to the Executive Director relating to any threat to O.E.M.C infrastructure or facilities or the water supply of the City and must fully cooperate with the City and all governmental entities investigating the threat. The Contractor must, notwithstanding anything contained in the Contract Documents to the contrary, at no additional cost to the City, adhere, and cause its Subcontractors to adhere, to any security and safety guidelines developed by the City and furnished to the Contractor from time to time during the term of the Contract and any extensions of it.

Each employee whom Contractor wishes to have access to an O.E.M.C facility must submit a signed, completed "Area Access Application" to the O.E.M.C to receive an O.E.M.C Security Badge. If Contractor wishes a vehicle to have access to an O.E.M.C facility, Contractor must submit a vehicle access application for that vehicle. The applications will solicit such information as the Executive Director may require in his discretion, including name, address, and date of birth (and for vehicles, driver's license and appropriate stickers). The Contractor is responsible for requesting and completing these forms for each employee who will be working at O.E.M.C facilities and all vehicles to be used on the job site. The Executive Director may grant or deny the application in his sole discretion. The Contractor must make available to the Executive Director, within one (1) day of request, the personnel file of any employee who will be working on the project.

At the Executive Director's request, the Contractor and Subcontractor must maintain an employment history of employees going back five years from the date Contractor began Work or Services on the project. If requested, Contractor must certify that it has verified the employment history as required on the form designated by the Executive Director. Contractor must provide the City, at its request, a copy of the employment history for each employee. Employment history is subject to audit by the City.

3.6.2.3. Security Badges and Vehicle Permits
O.E.M.C Security Badges and Vehicle Permits will only be issued based upon properly completed Area Access Application Forms. Employees or vehicles without proper credentials will not be allowed on O.E.M.C property.

The following rules related to Security Badges and Vehicle Permits must be adhered to:

A. Each employee must wear and display the O.E.M.C Security Badge issued to that employee on his or her outer apparel at all times.

B. At the sole discretion of the Executive Director and law enforcement officials, including but not limited to the Chicago Police Department, Cook County Sheriff's Office, Illinois State Police or any other municipal, state or federal law enforcement agency, all vehicles (and their contents) are subject to interior and/or exterior inspection entering or exiting O.E.M.C facilities, and all employees and other individuals entering or exiting O.E.M.C facilities are subject to searches. Vehicles may not contain any materials other than those needed for the project. The Executive Director may deny access to any vehicle or individual in his sole discretion.

C. All individuals operating a vehicle on O.E.M.C property must be familiar and comply with motor driving regulations and procedures of the State of Illinois and the City of Chicago.

The operator must be in possession of a valid, state-issued Motor Vehicle Operator's Driver License.

D. All required City stickers and State Vehicle Inspection stickers must be valid.

E. Individuals must remain within their assigned area and haul routes unless otherwise instructed by the City.

F. Access to the Work sites will be as shown or designated on the Contract Documents Drawings or determined by the Executive Director. The Executive Director may deny access when, in his sole discretion, the vehicle or individual poses some security risk to O.E.M.C.

3.6.2.4. Gates and Fences

Whenever the Contractor receives permission to enter O.E.M.C property in areas that are exit/entrance points not secured by the City, the Contractor may be required to provide gates that comply with O.E.M.C design and construction standards. Contractor must provide a licensed and bonded security guard, subject to the Executive Director's approval and armed as deemed necessary by the Executive Director, at the gates when the gates are in use. O.E.M.C Security will provide the locks. Failure to provide and maintain the necessary security will result in an immediate closure by O.E.M.C personnel of the point of access.

Stockpiling materials and parking of equipment or vehicles near O.E.M.C security fencing is prohibited.

Any security fencing, gates, or alarms damaged by the Contractor or its Subcontractors must be manned by a licensed and bonded security guard of the Contractor at Contractor's expense until the damaged items are restored. Contractor must restore them to their original condition within an eight (8) hour period from the time of notice given by the Executive Director.

Temporary removal of any security fencing, gate or alarm to permit construction must be approved by the Executive Director, and Contractor must man the site by a licensed and bonded security guard, approved by and armed as deemed necessary by the Executive Director, at Contractor's expense, on a twenty-four (24) hour basis during the period of temporary removal. Contractor must restore the items removed to their original condition when construction is completed.

3.6.2.5. Hazardous or Illegal Materials

Unauthorized hazardous or illegal materials, including but not limited to hazardous materials as defined in 49 C.F.R. Parts 100-185 (e.g. explosives, oxidizers, radiological materials, infectious materials), contraband, firearms and other weapons, illegal drugs and drug paraphernalia, may not be taken on O.E.M.C property. Alcoholic beverages are also prohibited.

3.6.3. Chicago Police Department Security Requirements

As part of Police operations and security, the Contractor must obtain from the Police Department, Security Badges for each of its employees, subcontractors, material men, invitees or any person(s) over whom Contractor has control, which must be visibly displayed at all times while at any Police Department facility. No person will be allowed beyond security checkpoints without a valid Security Badge. Each such person must submit signed and properly completed application forms to receive Security Badges. The application forms will solicit such information as the Superintendent may require; including but not limited to name, address, date of birth (driver's license). The Contractor is responsible for requesting and completing the form for each employee and subcontractor’s employee. The Superintendent may grant or deny the application in his sole discretion. The Contractor must make available to the Superintendent, within one (1) day of request, the personnel file of any employee who will be working on the project.

In addition to other rules and regulations, the following rules related to Security Badges, must be adhered to:

A. Each person must wear and display his or her Security Badge on their outer apparel at all times while at any Chicago Police Department facility.

B. Individuals must remain within their assigned area unless otherwise instructed by the Chicago Police Department.

3.6.4. Department of Water Management ("DOWM") Security Requirements

3.6.4.1. Identification of Workers and Vehicles

All employees and vehicles working within DOWM facilities must be properly identified. All vehicles and personnel passes will be issued to the Contractor by the Commissioner, as required. Contractor, Subcontractors, and employees must return identification material to the Commissioner upon completion of their respective work within the Project, and in all cases, the Contractor must return all identification material to the Commissioner after completion of the Project. Final Contract Payment will not be made until all passes issued have been returned to DOWM Security.

3.6.4.2. Access to Facilities

For purposes of this section, "employee" refers to any individual employed or engaged by Contractor or by any Subcontractor. If the Contractor, or any employee, in the performance of this Contract, has or will have access to a Department of Water Management (DOWM) facility, the City may conduct such background and employment checks, including criminal history record checks and work permit documentation, as the Commissioner of the Department of Water Management and the City may deem necessary, on the Contractor, any Subcontractor, or any of their respective employees. The Commissioner of the Department of Water Management has the right to require the Contractor to supply or provide access to any additional information the Commissioner deems relevant. Before beginning work on the project, Contractor must:

Provide the City with a list of all employees requiring access to enable the City to conduct such background and employment checks;

Deliver to the City consent forms signed by all employees who will work on the project consenting to the City's and the Contractor's performance of the background checks described in this Section; and

Deliver to the City consent forms signed by all employees who will require access to the DOWM facility consenting to the searches described in this Section.

The Commissioner may preclude Contractor, any Subcontractor, or any employee from performing work on the project. Further, the Contractor must immediately report any information to the Commissioner relating to any threat to DOWM infrastructure or facilities or the water supply of the City and must fully cooperate with the City and all governmental entities investigating the threat. The Contractor must, notwithstanding anything contained in the Contract Documents to the contrary, at no additional cost to the City, adhere, and cause its Subcontractors to adhere, to any security and safety guidelines developed by the City and furnished to the Contractor from time to time during the term of the Contract and any extensions of it.

3.6.4.3. Security Badges and Vehicle Permits

Each employee whom Contractor wishes to have access to a DOWM facility must submit a signed, completed "Area Access Application" to the DOWM to receive a DOWM Security Badge. If Contractor wishes a vehicle to have access to a DOWM facility, Contractor must submit a vehicle access application for that vehicle. The applications will solicit such information as the Commissioner may require in his discretion, including name, address, date of birth (and for vehicles, driver's license and appropriate stickers). The Contractor is responsible for requesting and completing these forms for each employee who will be working at DOWM facilities and all vehicles to be used on the job site. The Commissioner may grant or deny the application in his sole discretion. The Contractor must make available to the Commissioner, within one (1) day of request, the personnel file of any employee who will be working on the project.

At the Commissioner's request, the Contractor and Subcontractor must maintain an employment history of employees going back five years from the date Contractor began Work or Services on the project. If requested, Contractor must certify that it has verified the employment history as required on the form designated by the Commissioner. Contractor must provide the City, at its request, a copy of the employment history for each employee. Employment history is subject to audit by the City.

DOWM Security Badges and Vehicle Permits will only be issued based upon properly completed Area Access Application Forms. Employees or vehicles without proper credentials will not be allowed on DOWM property.

The following rules related to Security Badges and Vehicle Permits must be adhered to:

A. Each employee must wear and display the DOWM Security Badge issued to that employee on his or her outer apparel at all times.

B. At the sole discretion of the Commissioner and law enforcement officials, including but not limited to the Chicago Police Department, Cook County Sheriff's Office, Illinois State Police or any other municipal, state or federal law enforcement agency, all vehicles (and their contents) are subject to interior and/or exterior inspection entering or exiting DOWM facilities, and all employees and other individuals entering or exiting DOWM facilities are subject to searches. Vehicles may not contain any materials other than those needed for the project. The Commissioner may deny access to any vehicle or individual in his sole discretion.

C. All individuals operating a vehicle on DOWM property must be familiar and comply with motor driving regulations and procedures of the State of Illinois and the City of Chicago. The operator must be in possession of a valid, state-issued Motor Vehicle Operator's Driver License.

D. All required City stickers and State Vehicle Inspection stickers must be valid.

E. Individuals must remain within their assigned area and haul routes unless otherwise instructed by the City.

F. Access to the Work sites will be as shown or designated on the Contract Documents Drawings or determined by the Commissioner. The Commissioner may deny access when, in his sole discretion, the vehicle or individual poses some security risk to DOWM.

3.6.4.4. Gates and Fences

Whenever the Contractor receives permission to enter DOWM property in areas that are exit/entrance points not secured by the City, the Contractor may be required to provide gates that comply with DOWM design and construction standards. Contractor must provide a licensed and bonded security guard, subject to the Commissioner's approval and armed as deemed necessary by the Commissioner, at the gates when the gates are in use. DOWM Security will provide the locks. Failure to provide and maintain the necessary security will result in an immediate closure by DOWM personnel of the point of access.

Stockpiling materials and parking of equipment or vehicles near DOWM security fencing is prohibited.

Any security fencing, gates, or alarms damaged by the Contractor or its Subcontractors must be manned by a licensed and bonded security guard of the Contractor at Contractor's expense until the damaged items are restored. Contractor must restore them to their original condition within an eight (8) hour period from the time of notice given by the Commissioner.

Temporary removal of any security fencing, gate or alarm to permit construction must be approved by the Commissioner, and Contractor must man the site by a licensed and bonded security guard,

approved by and armed as deemed necessary by the Commissioner, at Contractor's expense, on a twenty-four (24) hour basis during the period of temporary removal. Contractor must restore the items removed to their original condition when construction is completed.

3.6.4.5. Hazardous or Illegal Materials

Unauthorized hazardous or illegal materials, including but not limited to hazardous materials as defined in 49 C.F.R. Parts 100-185 (e.g. explosives, oxidizers, radiological materials, infectious materials), contraband, firearms and other weapons, illegal drugs and drug paraphernalia, may not be taken on DOWM property. Alcoholic beverages are also prohibited.

ARTICLE 4. TERMS FOR WORK SERVICES CONTRACTS

4.1. The Services

4.1.1. Scope of Services

The scope of services ("Services") is described in the Scope of Work and Detailed Specifications article of this agreement.

Unless otherwise noted, the Contractor must take out, at Contractor's own expense, all permits and licenses necessary to perform the Services in accordance with the requirements of this Contract.

4.1.2. Estimated Quantities/Level of Service

Any quantities or level of usage shown herein are estimated for the initial Contract term. The City reserves the right to increase or decrease the quantities or level of Services required under this Contract. Nothing herein will be construed as intent on the part of the City to contract for any Services other than those determined by the City to be necessary to meet its needs.

The City will only be obligated to pay for such Services as are from time to time requested, performed, and issued via a Purchase Order release directly by the City.

4.1.3. Unspecified Services

Any service not specifically included in the Scope of Work and Detailed Specifications article may be added to this Contract if it falls within the same general category of Services already specified in the Contract. Pursuant to MCC Section 2-92-646, the lifetime, aggregate value of the City's purchase of any Services added to this Contract must not exceed ten percent (10%) of the original value of the Contract.

The Department will notify the Contractor in writing of the services which are necessary and request a written price proposal for the addition of the services to this Contract under the same terms and conditions of the original Contract, then forward the documents to the CPO. Such services may be added to the Contract only if the prices are competitive with current market prices and said services are approved by the CPO in writing. The CPO reserves the right to seek competitive pricing information on said services from other vendors and to solicit such services in a manner that serves the best interest of the City.

Any such services provided by the Contractor, without a written approval signed by the CPO, are done so entirely at the Contractor's risk. Consequently, in the event that such addition to the Contract is not approved by the CPO, the Contractor hereby releases the City from any liability whatsoever to pay for any services provided prior to the Contractor's receipt of the fully signed modification.

4.2. Performance of the Services

4.2.1. Standard of Performance

Contractor shall perform the Services with that degree of skill and care required to satisfactorily meet the requirements as set forth in the Detailed Specifications and to the satisfaction of the CPO. The Contractor will, at all times, act in the best interest of the City.

4.2.2. Standard Working Hours

Pursuant to MCC Section 2-92-220 a standard working day consists of 8 hours for this Contract; shifts must be coordinated with the Department. No overtime or premium pay is allowed unless otherwise specified in the Detailed Specifications and authorized by the Commissioner.

4.2.3. Character of Workers

The Contractor must employ only competent and efficient workers and whenever, in the opinion of the City, any such worker engages in conduct that poses a potential threat to safety, for example, if the worker is careless, incompetent, violates safety or security rules or fails to follow the safety requirements of this Contract, the Contractor must, upon request of the City, remove such worker from the work or services to be performed under this Contract and must not use such worker to perform under the terms and conditions of the Specification. The Contractor must not permit any person to work

upon the work or services to be performed under this Contract or enter into any buildings connected therewith who is under the influence of intoxicating liquors or controlled substances.

4.2.4. Quality of Materials and Inspection
The City will have a right to inspect any material to be used in performance of the Services for this Contract.

The City is not responsible for the availability of any materials or equipment required under this Contract.

The Contractor is responsible for the meeting the contractual obligations and standards regarding the quality of all materials, components, or services performed under this Contract up to the time of final acceptance by the City.

Non-compliant materials, components, or Services may be rejected by the CPO and must be replaced or re-performed by the Contractor at no cost to the City.

The City shall provide written notice to the Contractor indicating the time period in which Contractor must, at its sole expense, remove from City premises, any materials or components rejected by the City.

Any and all labor and materials which may be required to correct or replace damaged, defective or non-conforming products must be provided by the Contractor at no cost to the City. The Contractor must correct or replace the incorrect, damaged or defective or non-conforming goods within seven business days of the return unless otherwise provided in the Detailed Specifications. The City of Chicago will not be subject to restocking charges.

Failure to correct or replace unacceptable goods, or repeated delivery of unacceptable goods, will be an event of default under this Contract.

4.2.5. Manufacturer's Warranty and Product Information
If in performance of the Services, the Contractor provides any goods, the Contractor must have, and must demonstrate upon request, that it has authorization to transfer product warranties to the City of Chicago. The Contractor is required to provide and transfer all documentation issued by the manufacturer for the products to be provided under this Contract. This includes the manufacturer's genuine parts/product information, recall notices, manuals, licenses, assemblies and/or accessories as supplied by the original equipment manufacturer (O.E.M.).

The Contractor must provide the original product warranty and related services for the goods provided under this Contract in accordance with the standard warranty regularly supplied.

All warranties in the Agreement, including Section 4.2.5 and Section 4.2.6, shall survive inspection, acceptance, expiration or termination of this Contract. Nothing in the foregoing warranties shall be construed to limit any other rights or remedies available to the City under the law and this Contract.

4.2.6. Contractor's Warranties
If in performance of the Services, the Contractor provides any goods, the Contractor warrants that the title to the goods to be provided under this Contract is good and its transfer is rightful, and that the goods will be delivered free from any security interest or other encumbrance of which Contractor has not informed the City.

The Contractor expressly warrants that all goods shall be merchantable within the meaning of Article 2-314(2) of the Uniform Commercial Code in effect on the date they are ordered. In addition to all warranties that may be prescribed by law, the goods shall conform to specifications, drawings, and other description and shall be free from defects in materials and workmanship. Contractor also warrants that, except where the goods are produced pursuant to detailed designs furnished by the City, they will be free from defects in design. Such warranties, including warranties prescribed by law, shall run to City, its successors, assigns, customers, and to users of the goods.

At a minimum, the Contractor hereby warrants for a period of at least one year from the date of final acceptance by the City, that it will, at its own expense and without any cost to the City, replace all defective parts that may be required or made necessary by reason of defective design, material or workmanship, or by reason of non-compliance with the Contract Documents. The warranty period will commence on the first day the individual item is placed in service by the City. The City may revoke acceptance if the materials, goods, or components are later discovered not to be in conformance with this Contract.

For any construction work included in the Services, the Contractor's Warranty means the Contractor's representation as to the character and quality of the Services in accordance with the terms and conditions of the Contract Documents, and the Contractor's promise to repair and replace the work not in conformance with such representations. Without limiting the scope or duration of any Manufacturer's Warranty provided for specific parts of the work, all work furnished under this Contract is guaranteed by Contractor against defective materials and workmanship, improper installation or performance, and non-compliance with the Contract Documents for a period of one year. Unless otherwise specified, the one-year period will begin on the date of final acceptance by the Commissioner.

However, if at any time beyond the one-year Contractor's Warranty period, a latent defect in the work is discovered, the Contractor shall be responsible for re-performance, payment of damages, or such other remedy as deemed appropriate by the City.

4.2.6.1. Correction or Re-Performance of Services
If the Contractor has failed to properly perform the Services, upon direction in writing from the Commissioner, Contractor will promptly re-perform or correct all work or Services identified to be defective or as failing to conform to the standards set forth in the Contract Documents, whether observed before or after completion of the Services. The Contractor is responsible for all costs of correcting such defective or nonconforming Services, including costs associated with fixing any damages, re-performing the Services, and any costs required due to Contractor's inadequate performance.

4.2.6.2. Timeliness
The Contractor must provide the Services in the time-frame required in the Detailed Specifications. If Contractor's response and/or completion time for performance of the Services fails to meet this standard, the CPO may declare the Contractor in default.

4.2.6.3. Delay
If the City has caused the Contractor to be obstructed or delayed in the commencement, prosecution or completion of the Services by any act or delay of the City or by order of the Commissioner, then the time herein fixed for the completion of said Services will be extended for an equivalent period of time.

It is otherwise understood that no extension of time will be granted to the Contractor unless Contractor, immediately upon knowledge of the causes of an unavoidable delay, first notifies the Commissioner and CPO in writing, stating the approximate expected duration of delay. Contractor shall not be entitled to an extension of time without such prior notification and request for extension.

The CPO and the Commissioner will determine the number of days, if any, that the Contractor has been delayed. Such determination when approved and authorized in writing by the Commissioner and CPO, will be final and binding.

It is further expressly understood and agreed that the Contractor shall not be entitled to any damages or compensation from the City, or be reimbursed for any loss or expense on account of any delay or delays resulting from any of the causes aforesaid.

4.2.7. Public Convenience
All Services will be conducted in a manner that minimizes dust, noise, and inconvenience to the normal activities of the facility where the Services are performed. The Contractor is responsible for conducting Services in such a manner as to minimize debris left in the public way and shall provide clean-up as required by the Commissioner. Whenever the Commissioner determines any type of operation constitutes a nuisance, the Contractor will immediately proceed to conduct its operations in an approved manner.

The Commissioner may at any time require additional provisions if such are deemed necessary for public safety or convenience.

4.2.8. Clean Up
The Contractor must, during the performance of Services, remove and dispose of all materials and the resultant dirt and debris on a daily basis and keep the work site(s) and adjacent premises in a clean condition satisfactory to the City. Upon completion of work activities, the Contractor must remove all materials, tools and machinery and restore the site to the same general condition that existed prior to the commencement of its operation.

4.2.9. Work Performed on City Property
Contractor's personnel will exercise safe and sound business practices with the skill, care, and diligence normally shown by professional technicians employed in the type of Services required under this Contract.

The Contractor must employ only competent and efficient workers, and whenever, in the opinion of the City, any such worker engages in conduct that poses a potential threat to safety, for example, if the worker is careless, incompetent, violates safety or security rules or fails to follow the safety requirements of this Contract, the Contractor must, upon request of the City, remove such worker from the work or services to be performed under this Contract and must not use worker to perform under the terms and conditions of the Specification.

The Contractor will not permit any person to enter any part of a City facility or property while under the influence of intoxicating liquors or controlled substances. The Contractor will not permit obnoxious behavior, or possession or consumption of alcoholic beverages or drugs anywhere on the site of any Services to be performed under this Contract.

The Commissioner has authority to request the Contractor to remove any worker who proves to be incompetent or negligent in his/her duties.

If required by the Detailed Specifications, the Contractor’s employees or subcontractors are required to wear suitable uniforms during the time they are on duty on any City property.

The Contractor’s employees or subcontractors must wear an identification badge at all times while on duty on any City property.

The Contractor’s employees must have proper identification on their person before they will be allowed on any City property.

Smoking is prohibited in all City of Chicago facilities.

The Contractor will require that all employees refrain from disturbing papers on desks, opening desk drawers or cabinets.

While on City premises, the Contractor will not store any equipment, tools or materials without prior written authorization from the Commissioner. The City will not be responsible for or liable to pay the Contractor for any loss of equipment, tools or materials stored in unsecured areas without proper authorization.

4.2.10. Work In Progress

Any Services in progress at the termination date of the Contract will be completed by the Contractor in the most expedient method available. In no event will the Contractor be relieved of its obligations under this Contract until all Services requested prior to the expiration of the Contract has been completed and accepted by the Commissioner.

4.3. Compensation

The Services will be provided at the prices listed on the Proposal Pages submitted with the Contractor's bid and as accepted by the City. Adjustments to prices will be as provided in the Scope of Work and Detailed Specifications, as applicable.

4.4. Centralized Invoice Processing

This Contract is subject to Centralized Invoice Processing ("CIP"). Invoices must be submitted directly to the Comptroller's office by US Postal Service mail to the following address as appropriate:

Invoices for any City department other than the Department of Aviation:

Invoices
City of Chicago, Office of the City Comptroller
121 N. LaSalle St., Room 700
Chicago, IL 60602

Invoices for the Department of Aviation:

Chicago Department of Aviation
10510 W. Zemke Blvd.
P.O. Box 66142
Chicago, IL 60666
Attn: Finance Department

OR

Invoices for any department, including Aviation, may be submitted via email to: invoices@cityofchicago.org with the word "INVOICE" in the subject line.

All invoices must be signed, marked "original," and include the following information or payment will be delayed:

- Invoice number and date
- Contract/Purchase Order number
- Blanket Release number (if applicable)
- Vendor name and/or number
- Remittance address
- Name of City Department that ordered the goods or services
- Name and phone number of your contact at the ordering department
- Invoice quantities, commodity codes, description of deliverable(s)
- Amount due
- Receipt number (provided by the ordering department after delivery of goods/services)

Invoice quantities, service description, unit of measure, pricing and/or catalog information must correspond to the terms of the Bid Page(s).

If applicable, if invoicing Price List/Catalog items, indicate Price List/Catalog number, item number, Price List/Catalog date, and Price List/Catalog page number on the invoice.

Invoices for over-shipments or items with price/wage escalations will be rejected unless the Contract includes a provision for such an adjustment.

Freight, handling and shipping costs are not to be invoiced; deliveries are to be made F.O.B., City of Chicago. The City of Chicago is exempt from paying State of Illinois sales tax and Federal excise taxes on purchases.

The City may change its invoice submission and processing procedure during the term of this Contract. Should a change occur, the City will notify Contractor of the new procedure which the Contractor will then be required to follow.

4.5. Clean Diesel Fleet MCC 2-92-595

If this Contract is for construction, demolition, restoration, repair, renovation, environmental remediation or environmental abatement of any building, structure, tunnel, excavation, roadway, bridge, transit station or parcel of land and the estimated value of this Contract is $2,000,000 or more:

A. Contractor must comply with the Clean Diesel Contracting Ordinance, MCC Section 2-92-595.

B. Contractor and any Subcontractor(s) must utilize Ultra Low Sulfur Diesel Fuel (ULSD) for any heavy-duty diesel-powered vehicle, non-road vehicle or non-road equipment used in the performance of the Contract.

C. Contractor and any Subcontractor(s) must minimize idling of motor vehicles and non-road vehicles used in the performance of the Contract during periods of inactivity, and must comply with the anti-idling requirements imposed by any applicable federal, state, or local law.

D. Contractor and any Subcontractor(s), may not use any of the following vehicles and equipment in the performance of the contract:

(i) any heavy-duty diesel vehicle not meeting or exceeding the US EPA's emission standards for heavy-duty diesel vehicles for the 1998 engine model year, unless such vehicle is fitted with a verified diesel emission control retrofit device; or

(ii) any non-road vehicle or non-road equipment not meeting or exceeding the US EPA's Tier 1 Non-road Diesel Standards, unless such vehicle or equipment is fitted with a verified diesel emission control retrofit device.

E. Any heavy-duty diesel vehicles, non-road vehicles and non-road equipment used in the performance of this Contract must incorporate such engine or retrofit technology so that the Contractor, through such engine or retrofit technology used directly by the Contractor and all subcontractors, shall have a minimum of 3.0 clean fleet score per a reporting period, as calculated by using the methodology described in MCC subsection 2-92-595(c)(5). Contractor may exclude from the calculation of the clean fleet score up to fifty percent of all of the heavy-duty diesel vehicles, non-road vehicles and non-road equipment used in the performance of the contract during a reporting period that are owned or leased by any firm that the CPO has granted a clean fleet score annual waiver certificate pursuant to MCC subsection 2-92-595 (f). However, pursuant to MCC subsection 2-92-595(b)(6), if this contract is advertised after January 1, 2020, the minimum clean fleet score is increased to 4.0, and Contractor may exclude from the calculation up to only twenty five percent of vehicles owned or leased by a firm that has received a clean fleet score waiver certificate instead of fifty percent.

F. The City may conduct an audit of the Contractor or inspect any vehicle or equipment used in the performance of the Contract to ensure compliance with the requirements specified above. In the event that Contractor or any Subcontractor fails to utilize ULSD or fails to minimize idling or comply with antiidling requirements, Contractor will be subject to liquidated damages of $5,000 per day for each violation and each day of noncompliance will be a separate violation; provided, however, the damages will not exceed $50,000 for any one vehicle or piece of equipment, as specified in MCC Section 2-92-595(e). Such liquidated damages are imposed not as a penalty but as an estimate of the damages that the City will sustain from delay in completion of the project and inspection and other enforcement costs, as well as the resultant damages to the public health of its citizens, which damages by their nature are not capable of precise proof. The City is authorized to withhold and deduct from monies otherwise payable to the contractor the amount of liquidated damages due to the City.

Contractor understands that pursuant to MCC subsection 2-92-595(e)(6), any person knowingly making a false statement of material fact to any City department with respect to compliance with the contract provisions specified in MCC subsection 2-92-595(e) Chicago may be fined not less than $1,000 or more than $5,000 for each statement.

ARTICLE 5. SCOPE OF WORK AND DETAILED SPECIFICATIONS

5.1. General

The Contractor will furnish and deliver Portable Vehicle Impact Devices or as described, Active (Portable) barriers or Vehicle Impact Protection Devices (VIPD) to the City of Chicago Office of Emergency Management and Communications ("OEMC"), and deliver new, current Model Bollard Trailers as specified, F.O.B., City of Chicago, Department of Assets, Information & Services, and will provide repair services and replacement parts, as described in the Proposal Pages and in accordance with the terms and conditions of this specification.

5.2 Basis of Award

In the event that a contract is awarded pursuant to this specification, the Chief Procurement Officer will award such contract to the lowest responsive and responsible bidder per Group as determined by the bid price, including any statutorily mandated adjustments to the bid price as applicable, meeting the terms and conditions set out in the Bid Documents. Bidders must bid all lines within each Group. A Bidder whose bid fails to quote unit prices on all bid lines within a Group will be considered an incomplete bid and grounds for rejecting the Bid. Bidder may bid one, or more Groups, but is not required to bid all Groups. The City reserves the right to award one or more contracts to the lowest responsive and responsible bidder for any combination of Groups (Group A, B, C, D, E, F and/or G).

For discounts, this unit price is entered in e-Procurement Line items screen or Proposal Pages as a decimal calculated by subtracting the discount expressed as a decimal from 1. For example, a Bidder bidding a 20% discount off catalog must subtract 0.20 from 1. In this example, (1 - 0.20) = 0.80, which is the number that Bidder must enter as the unit price into the eProcurement proposal pages or bid line screen.

The Bidder (s) percentage of discount off list prices and all per unit prices must include all peripheral costs, including but not limited to, shipping, return and restocking charges, warranties, guarantees, delivery, insurance, applicable taxes, overhead, travel etc. No additional compensation whatsoever will be allowed by the City beyond the markup or discount percentages, or unit prices bid by the Bidder(s).

Example:

Formula = Estimated Usage Amount multiplied by Unit price = Extended price

- **For a 20% Discount (1-20%) = 10,000*.80= $8,000**

5.3 Funding

The source of funds for payments under this Contract is Fund Numbers 018-RH3K-58-2705-058-20104752-0400-220400, 019-WY38-58-2705-058-20105487-0400-220400 and various. Funding for this Agreement is subject to the availability of funds and their appropriation by the City Council of the City.

5.4 Contract Term

The Term for this Contract will be 60 months, unless terminated earlier or extended pursuant to the terms of this Contract.

The City will establish the start and expiration dates at the time of formal award and release of this contract.

The start date will be no later than the first day of the succeeding month from the date shown as the Contract Award and Release Date on the Proposal Acceptance Page.

5.5 Price Adjustment (Capped Rate)

A maximum 3% increase may be allowed after the initial 24-month period and in each subsequent 12-month period for the portable vehicle impact devices and the parts, supplies, and accessories. Beginning on the date after the initial (24) month term, and each twelve (12) month anniversary thereafter, subject to acceptable performance by the Contractor and contingent upon the appropriation of sufficient funds for the procurement of services provided for in this Contract, annual price adjustments of the Contract pricing may be made after receipt of written request from the Contractor showing cause substantiating the need for the increase, made no later than thirty (30) calendar days prior to the expiration of the initial (24) month term, and each such twelve (12) month

anniversary thereafter. If Contractor does not request a price adjustment within such thirty (30) calendar day period, Contractor will not be entitled to a price adjustment for the upcoming year. The Contractor must justify its request for an increase by submitting the latest editions or supplements to current manufacturer's published price lists and detailed price data and provide supporting documentation to the User Department to verify the validity of price increase. The Contractor must also furnish a written statement to the User Department which states that the increase represents the cost of the product and in no way includes an increase for profits or overhead. The User Department and/or Chief Procurement Officer may require additional information to verify the price increase. Annual price decreases may be initiated by the City within 30 days of the initial 24-month period anniversary of the Contract start date and in each subsequent 12-month period for the portable vehicle impact devices and the parts, supplies and accessories.

5.6. Authorized Dealer

The Contractor must provide documentation that it is either the equipment manufacturer or an authorized dealer/distributor/certified service representative and can provide genuine parts, assemblies, and/or accessories as supplied by the original equipment manufacturer (OEM). Further, the Contractor must furnish original product warranty and manufacture's related services such as product information, product re-call notices, and other pertinent information. This information must be submitted at the time of bid submission.

The Contractor's compliance with these requirements will be determined by the Chief Procurement Officer, whose decision will be binding.

Documentation which validates the Contractor's status of authorized dealer or distributor must be submitted with the bid. Contractor must also demonstrate that it has authorization to transfer product warranties to the City of Chicago.

5.7. Licensed New Vehicle Dealer

When required by the Illinois Motor Vehicle Code, Section 625 ILCS 5/5-101, the Bidder must be a licensed vehicle dealer in accordance with the Illinois Motor Vehicle Code, Section 625 ILCS 5/5-101. Bidder must provide a copy of current Registration for Authority to Deal in Trailers issued by the Illinois

Secretary of State with the bid. Failure to obtain the required licenses may cause the bids to be rejected as non-responsive.

Bidder must be licensed by the Illinois Secretary of State to deal in the specific make of vehicle proposed. If, at the time of the submission of its bid, the Bidder is not registered to deal in the specific make of vehicle proposed, Bidder has until 30 days after the bid opening date to obtain the required documentation and submit it to the City.

Bidders not located in Illinois must provide with their bid all such registration/license documentation from their state in lieu of documentation from the Illinois Secretary of State.

Bidders will not be required to be licensed vehicle dealers and will not be required to furnish Registration for Authority to Deal in Trailers where not required by the Illinois Motor Vehicle Code, Section 625 ILCS 5/5-101, when proposing only units that are exempt from the requirements of the Illinois Motor Vehicle Code for dealer licensing and certificates of title.

5.8. Portable Vehicle Impact Devices

Portable Vehicle Impact Devices or Active (Portable) barriers or Vehicle Impact Protection Devices (VIPD) have been defined by the Department of Defense (DOD) as physical security concept to create a layered or tiered defensive system that delays, defeats, or otherwise mitigate potential intruders. The City of Chicago Municipal Code of Chicago added a new section 9-80-190 which defines Vehicle Impact Protection Devices as a device designed, engineered, and sited to separate areas of pedestrian and vehicular travel and prevent vehicles from

encroaching into areas which are solely intended for non-vehicular use or pedestrian travel. VIPDs barriers are to follow the ASTM Vehicle Crash Testing standards and performance methodology. The effectiveness is based on the ability of the device to stop vehicles and transmit the energy to the device by design.

5.8.1. Crash Rated Tested

Contractor must ensure to refer to the updated list and supply active barriers tested by international testing standards and testing procedures that include one or all of the following: ASTM International F2656, Standard Test Method for Crash Testing of Vehicle Security Barriers; Publicly Available Specification (PAS) 68, Impact Test Specifications for Vehicle Security Barriers; CEN Workshop Agreement (CWA) 16221, Vehicle Security Barriers – Performance Requirements, Test methods and Guidance on Application; and Department Of State (DOS) SD STD-02.01, Specification For Vehicle Crash test of Perimeter Barriers and Gates.

The DOD Anti-Ram Vehicle Barrier List verifies vehicle barriers that are certified with performance standards in ASTM F2656, PAS 68, CWA 16221 or previously tested to the DOS SD-STD-02.01 standard and that the appropriate test reports have been submitted to, and validated by, the Protective Design Center.

5.8.2 Specification

VIPD barriers are configured for expedited deployment, retrieval, and relocation. This barrier system is quick and flexible security built for vehicle mitigation.

GROUP A

PORTABLE, UNANCHORED, BALLISTIC-RATED VEHICLE BARRIERS:

These unanchored, drop and stop hostile vehicle mitigation solutions must be deployable on roadways and hard surfaces. The arch shaped figuration can be fixed in place as a primary security system for entry points, roadways, and perimeters. The barrier must be able to be deployed by one person in under 10 minutes. The barriers requested as part of this specification should require no maintenance, electricity, hydraulics, or batteries for operation. Barriers must be capable of full ballistic protection for any armor piecing 50 caliber rounds. Barrier must include lifetime guarantee and as such replacement of the barrier or maintenance on the barrier will be at no cost to the City. Barriers should be priced to sell as individual units.

Design Basis Threat (DBT) vehicle, other vehicle weights and speeds:

- Modular design with flexible configuration for lane closures, lane mergers, long perimeter protection when connected to Arrestor Cables
- Unit weight over 600lbs
- Crash tested and Crash-certified of K4 = 15,000# Truck at 30mph (450,000 ft-lbs. of kinetic energy), US Department of State
- Structural steel ASTM A36 plates
- Bolts conform to the ASTM specifications for A325 or A490 high strength bolts
- All welding is AWS certified
- Fabricated of high strength steel made in the United States
- Connected into sets of two or more barrier
- Heavy duty back plates digs into force barrier into vehicles
- Ballistic-rated front plate and back gusset
- Ramped front plate levers into vehicle undercarriage

- Measurements of 2' (60 cm) wide, 4' (120 cm) long, 3’ (90 cm) high (per unit)
- Jagged front and back edges with spikes on horizontal plate for gripping on or before impact
- Wide rear kick plate 10” (25.4 cm) long to reinforce stopping of the vehicle on impact
- Fixed in place ramp at 13 degrees with vertical plate positioned on the horizontal plate
- Attachment points for either 3’ (90 cm) arrestor cables or 8’ (243 cm) arrestor cables
- Unanchored stopping power
- Units may be anchored by using a bolted method row of 4 to stop vehicles traveling at 40 MPH (64 KPH) within 7’ (213 cm of impact Crash Rated: K4 = 15,000# Truck at 30mph (450,000 ft-lbs. of kinetic energy. Barriers test standards conducted by ASTM F2656-15 (previously ASTM F2656-07), PAS 68, and IWA 14-1 test.
- Un-bolted unites stop a vehicle traveling at 30 MPH (48 KPH) within 14’ (426 cm)

Deployment Mechanisms:

- Non-electronic, non-hydraulic design
- Reusable after impact
- Tow bar is 5’4” (162 cm) long with a 20” (50 cm) square handle with a locking pin used in the receiving cradle combined with connecting the leverage chain onto the receiving mount at the base of the ramp
- Removable wheels for stationary position or locked in the up position once set in place
- One person portable and rapidly deployable within minutes
- No heavy equipment needed to deploy
- Easy transportation in sets of 4, 6, 8, 12 and 16 units where a hauler and tow bar can transport by standard pickup truck or trailer
- Fast setup, unit pivots on wheels with hauler or tow bar connectors

Operations and Maintenance (O&M) Requirements:

- Lifetime warranty on unit and parts
- No maintenance contracts required

Environmental Condition at Barrier:

- Utilized for primary security check points, roadways, and hard surfaces.
- Functional in all weather conditions.
- May be galvanized or painted
- Suitable for on aggregate roadways and hard surfaces

After impact barrier gaps:

- Barrier is guarantee not to break and should be reusable after impact.

GROUP B

PHALANX TYPE BARRIER:

This Phalanx (as identified by the DOD) type barrier must be a trailer mounted roadway barrier including 20-foot clear opening (16ft and 12 ft options also quoted if available). The full-scale crash test is 20 Foot portable K-4 crash-rated vehicle barricade system. The barrier is designed as a towable, rapid deployment vehicle barricade. The 20-foot clear opening developed for locations that have large vehicle traffic. The barrier is configured for

expedited deployment, retrieval, and location. The system can be deployed by a 2-person setup placed on exiting concrete, asphalt roadways, verges, level compacted soils or combination of any of these listed. NO excavation or sub-surface properties is required. The battery-operated hydraulic power unit receives power where local power is available. The Phalanx type barrier ramp is self-contained with free passage between buttresses of 20 ft. (240IN). Low profile free traffic flow barricade ramp.

Impact Speed at Barrier:

- Stops and disables a 15000-pound G.V.W. moving at 30 mph
- The force first is absorbed by the Barrier Ramp and then transmitted to the ground plate and inertia buttress.
- Certified meeting the U.S. Department of State testing Document SD-STD-02.01
- Performance evaluation with a rating of K4/L1.
- Gross Vehicle Weight: 15,000 pounds/66.7 KN Crash Speed: 30 mph/48kph or ASTM 2656 M30 and ASTM 2656 M40 (K4, K8)
- Barrier only wt. 13,371lbs (6065 kg)
- Trailer only wt. 1,410lbs (640 kg)
- Barrier with trailer wt. 14,781lbs (6705 kg)

Design Basis Threat (DBT) vehicle, other vehicle weights and speeds:

- Portable system with full highway rated transporter system
- Operated locally or remotely
- All Hydraulic Operation
- Built-in vehicle ramps with ½-inch sept
- Quiet Operations
- Battery supplied with any 12 V Automobile battery with standard internal battery connections
- Battery booster packs available with internal battery charger. Will run the barrier with 50 cycles
- Height of the Barrier will be at minimum of 30 inches (78 CM) as measured from the roadway surface to the top edge of the Barrier Ramp. 2.3 Barrier Clear Opening
- The standard clear opening will be 242 inches as measured inside to inside of the buttresses, or clear opening (smaller sizes may be quoted only as additional options not instead of 242 inch required)
- Barrier plate 1.25 (3.2 cm)
- Battery operated Hydraulic Power Unit, maintained, and recharged from either a Solar Array, an Internal Battery Charger (operated on a local power source), Field Interchangeable Rechargeable Battery Pack or from other local low voltage sources.
- Control point available at the Barrier, or at an adjacent control site, or by a handheld control module on a 'plug-in' umbilical cable.
- The Hydraulic Power Unit can be located on the Barricade or positioned remotely
- Hitch assembly removable with interchangeable with barrier and trailer
- The Barrier system will be mounted on a dual axle transporter with torsion suspension
- Hydraulic Circuit consist of an electrically driven hydraulic pump connected to electrically actuated valves installed on a manifold to allow oil to be driven to a hydraulic cylinder(s) to raise or lower the Barrier during normal operation as well as deploying and retrieval. The hydraulic circuit includes all necessary control logic, interconnect lines and valves.

Trailer:

- Trailer GVWR: 15,000 lbs.
- Trailer Weight without Barrier: Approximately 1,100 lbs.
- Trailer Weight with Barrier Attached: Approximately 15,000 lbs.
- Lighting System: 12 VDC. Per federal standards.
- Trailer Braking System: Hydraulic, 4-wheel brakes.

Deployment Mechanisms:

- Deployed after being towed to the site
- Barrier portable assembly containing a PHALANX TYPE Full Width Barrier Ramp hinged at both ends, raised, and lowered by means of a Hydraulic Operating System.
- Lowered into position by means of hydraulic jacks
- When the Barrier Ramp is raised to the guard position, present a formidable obstacle to approaching vehicles.
- Push button controlled
- Barrier ramp includes a locking method or device
- The barrier provides a locking pin with padlock locking points to secure the Barrier in the guard position.
- No hand cranking required.
- While on site the wheels are sorted, and the vehicle ramps are folded out
- Deployment device small heavy-duty turntable in which the barrier is lowered on to.
- While lowered the barrier is easily rotated into position.
- Estimated deployment time- 15 to 20 minutes.
- The barrier retrieved time 12-18 minutes

Operations and Maintenance (O&M) Requirements:

- Yearly maintenance includes light cables for proper connecting, lighting cables for damaged casing and frayed wires, tighten all hardware, tires, and brakes, repack wheel bearings, rotate tires, replace barrier attached bolts with new 3/4”-10 UNC grade 8 bolts 10” long and barrier attachment nut plates.

Environmental Condition at Barrier:

- Utilized for primary security check points, roadways, and hard surfaces.
- Functional in all weather conditions.
- May be galvanized or painted
- Suitable for on aggregate roadways and hard surfaces
- All external surfaces of the barrier, ramps, support mechanism and transporter should have a rust inhibiting industrial enamel surface or optional inorganic zinc rich primer and color finish coat.

GROUP C

MODULAR VEHICLE BARRIER SYSTEM:

This barrier system is a quick and lightweight certified modular vehicle barrier. The system is a certified ASTM, IWA-14, and PAS 68 standard mobile vehicle barrier. Tested and rated to stop a 7.5-ton truck at 30 mph. This system is easy to transport and deploy and is easily configured for wider or narrower street openings depending on operational needs. Purchase price should include option to buy system of 8 barriers and single additional barriers which can be added to any configuration for wider streets.

- Enhances Safety and Supports Security Initiatives
- Lightweight – Easily Carried and Transferred
- Folds Compactly and Stows Away Efficiently
- ASTM-F2656-15 Tested and Certified
- Minimal Maintenance Required
- Easy and Quick Assembly – No Tools Required for a Quick Assembly for Immediate Threats
- High-Impact Capabilities
- Flexible Length for Any Size of Vehicle Route and Lane Width
- Transfers Momentum of Vehicle to the Ground
- Safety Lights and Signs Can Be Included
- Designed for Use on Sandy, Rocky and Rough Terrain, Gravel, and Asphalt
- Suitable for Urban and High-Level Threat Areas and Events
- Basic Black and Yellow Color
- Energy-Absorbing Technology
-

Operations and Maintenance (O&M) Requirements:

- Yearly maintenance includes light cables for proper connecting, lighting cables for damaged casing and frayed wires, tighten all hardware, tires, and brakes, repack wheel bearings and rotate tires.

Group D

Rental of PORTABLE, UNANCHORED, BALLISTIC-RATED VEHICLE BARRIERS (see specification outlined in Group A).

- Pricing must be provided for daily/weekly/monthly rentals for drop off within 24 hours.
- Costs to drop off and pick up barriers must be included in rental cost. Drop off/pick up will be within Chicago city limits.

Group E

Rental of PHALANX TYPE BARRIER (see specification outlined in Group B).

- Pricing must be provided for daily/weekly/monthly rentals for drop off within 24 hours.
- Costs to drop off and pick up barriers must be included in rental cost. Drop off/pick up will be within Chicago city limits.

Group F

Rental of MODULAR VEHICLE BARRIER SYSTEM (see specification outlined in Group C).

- Pricing must be provided for daily/weekly/monthly rentals for drop off within 24 hours.
- Costs to drop off and pick up barriers must be included in rental cost. Drop off/pick up will be within Chicago city limits.

Group G

Purchase of Model Bollard Trailers (see specifications outlined in Section5.10, 5.11 and 5.12).

- Trailers or equipment furnished will be the manufacturer's latest models

Any accessories not herein mentioned but necessary to furnish a complete unit ready for use upon delivery will be included.

5.9. Example of Ratings

Active Barriers must comply with a rating listed in Appendix B of the most current (month/year) from the DOD Anti-Ram Vehicle Barrier List. Examples include:
ASTM F2656

Kinetic Energy Designation (Relevant Examples):

FS30 = 4,630# Full-size Sedan at 30mph (203,000 ft-lbs. of kinetic energy)
FS40 = 4,630# Full-size Sedan at 40mph (342,000 ft-lbs. of kinetic energy)
FS50 = 4,630# Full-size Sedan at 50mph (519,000 ft-lbs. of kinetic energy)
FS60 = 4,630# Full-size Sedan at 60mph (810,000 ft-lbs. of kinetic energy)
M30 = 15,000# Truck at 30mph (450,000 ft-lbs. of kinetic energy)
M40 = 15,000# Truck at 40mph (800,000 ft-lbs. of kinetic energy)
M50 = 15,000# Truck at 50mph (1,250,000 ft-lbs. of kinetic energy)

Penetration Ratings
P1 = Less than 3.3' of penetration
P2 = 3.31' to 23.0' of penetration
P3 = 23.1' to 98.4' of penetration

Example Ratings:
ASTM F2656-18a FS 30 P3 (Full-size Sedan at 30mph with a penetration of 23.1' to 98.4')
ASTM F2656-18a M50 P1 (Standard Test Truck at 50mph with a penetration less than 3.3')

DOS SD-STD 02.01
Kinetic Energy Designation:
K4 = 15,000# Truck at 30mph (450,000 ft-lbs. of kinetic energy)
K8 = 15,000# Truck at 40mph (800,000 ft-lbs. of kinetic energy)
K12 = 15,000# Truck at 50mph (1,250,000 ft-lbs. of kinetic energy)

Penetration Ratings
As of 2003 all barriers will have penetration of 3.3' or less
Example Ratings:
K12 (15,000# Truck at 50mph with less than 3.3' of penetration)

PAS 68
Kinetic Energy Designation (Relevant examples):
V/2 500 (M2)/64/90 = 2500kg Pickup at 64kph at 90 degrees (291,000 ft-lbs. of kinetic energy)
V/2 500 (M2)/80/90 = 2500kg Pickup at 80kph at 90 degrees (455,300 ft-lbs. of kinetic energy)
V/2 500 (M2)/96/90 = 2500kg Pickup at 96kph at 90 degrees (655,600 ft-lbs. of kinetic energy)
V/2 500 (M2)/112/90 = 2500kg Pickup at 112kph at 90 degrees (892,400 ft-lbs. of kinetic energy)
V/7 500 (N2)/48/90 = 7500kg 2-axle truck at 48kph at 90 degrees (491,700 ft-lbs. of kinetic energy)
V/7 500 (N2)/64/90 = 7500kg 2-axle truck at 64kph at 90 degrees (874,100 ft-lbs. of kinetic energy)

Penetration Ratings
Penetration rating is actual penetration distance
Example Ratings: Bollard
V/2 500 (M2)/80/90: 2.0/2.8 = 2500kg Pickup at 80kph at 90 degrees with 2.0 meters of penetration.

CEN 16221
See PAS 68. Methods are similar

Any of the barriers listed within the current Meridian Rapid Defense Group, Delta Scientific, Global Grab and ARX Perimeters catalog or equivalent under the classification of Portable Vehicle Impact Devices are examples of acceptable barriers.

Active (Portable) barriers or Vehicle Impact Protection Devices (VIPD) must be able to drop and stop for a hostile vehicle mitigation solution deployable on roadways and hard surfaces. These devices or barriers are primary security systems for entry points, roadways, and perimeters.

5.10. Delivery for Group G

Pre-Delivery, Servicing and Adjustments

Prior to delivery of any trailers, the Contractor will perform any/all preparatory operations recommended by the manufacturer, including (where applicable):

·Testing the operation of all accessories;

·Testing electrical, hydraulic and air systems;

·Charging batteries;

·Inflating tires to recommended pressures;

·Lubricating all grease fittings and friction points;

Equipment, Component and Dimensional Data

Under this agreement, the Contractor is required to assemble and furnish to the Department a detailed list of information (approximately 150 data items) related to the specified trailers, the component parts and mounted equipment, no later than fifteen (15) calendar days prior to scheduled delivery date. Such information must be furnished by completing a "VMART Tech. Spec. Item Form", a copy of which may be obtained from the Department, Technical Services Division; (312) 744-4300.

Any and all costs involved in providing the requested information must be anticipated by the Contractor and incorporated into the bid pricing. The Contractor will not be entitled to any additional compensation from the City as a result of this provision.

The Contractor must deliver the specified trailers, complete with all attachments and ready for use. Delivery must be made between the hours of 8:00 a.m. and 2:30 p.m., Monday through Friday, excluding Holidays. Trailers must be delivered F.O.B. Destination (City of Chicago), IL at the following address:

Department of Asset & Information Services

210 W. 69th Street

Chicago, IL 60628

Attn: Kevin Campbell, Phone #: (312) 745-2614.

Delivery of the specified trailers must be completed within 300 Calendar Days following the issue date of purchase order release.

The above noted Contact Person must be notified at least 48 hours prior to delivery of the specified Trailers.

5.11. Vehicle and Equipment Additional Requirements (Group G)

5.11.1. General Construction

The trailers or equipment furnished will be the manufacturer's latest models. Any accessories not herein mentioned but necessary to furnish a complete unit ready for use upon delivery will be included. The Trailers or equipment will conform to the best practices known to the trade in strength, quality of material and workmanship and be subject to this specification in full. The specification will be construed as minimum; should the manufacturer's current published data or standard package exceed this, it will be considered minimum and will be furnished. The City reserves the right to waive or make exceptions to this requirement if it be to the City's best interest.

5.11.2. Standard Product

Experimental trailers will not be acceptable. Any trailers which are not produced by regular production methods and/or which have not been offered for sale to the public through accepted industry trade channels for approximately one (1) year prior to the offering of this bid, will be considered experimental. The Chief Procurement Officer reserves the right to determine what constitutes experimental equipment.

Hybrids and/or combinations of two (2) or more standard production units may not be accepted. The Contractor must furnish evidence upon request that the Trailers to be furnished have been commercially available through the proposed manufacturer to the trade for a period of not less than approximately one (1) year and has been fully field tested to the satisfaction of the Chief Procurement Officer.

5.11.3. Design and Construction Practices

The Trailers and any/all assemblies, subassemblies, component parts, etc., must be designed with a factor of safety that is equal to or greater than that which is considered standard and acceptable for this class of equipment. Where applicable, the Trailers or equipment must conform to the standards established by Military Specifications, the Society of Automotive Engineers, Federal Aviation Administration or the Federal Motor Vehicle Safety Standards. Assemblies, sub-assemblies, component parts, etc., must be standard and interchangeable throughout the entire quantity of units purchased under this document. Assemblies, sub-assemblies, component parts, etc., that are obsolete or approaching obsolescence due to material, design changes or improvements will not be acceptable and will be subject to replacement with current assemblies, sub-assemblies, component parts, etc. The Trailers furnished by the Contractor under this Specification must also comply with all applicable Federal OSHA, State of Illinois and local laws/acts ordinances in effect at the time of delivery.

The trailers must be designed to function reliably and efficiently in sustained operation, under conditions which are typical for the intended application.

The trailers must be designed to permit accessibility to all major lubrication and maintenance points with minimal disturbance of other components or assemblies.

Where "heavy-duty" items are required by this Specification, the term will be understood to define items which exceed the quality, capacity, durability and/or quantity of those items normally supplied with a standard production unit.

No dealer advertising labels may be affixed to a unit when delivered to the City.

5.11.4. Quality Control

The Contractor must utilize Industry-recognized standards and procedures to assure that a satisfactory level of quality control are maintained in all stages of the manufacturing, assembly and installation process. Employees of the Department of Procurement Services and the Department or agents acting on behalf of the City, accompanied by such City personnel will have open access to all areas/ facilities in order to ensure that proper quality control standards are being met.

5.11.5. Training/Technical Assistance

The Contractor must furnish professionally conducted training sessions to the extent described below. This training will be provided by the Contractor as a portion of the Contract, at no additional cost to the City.

For each trailer delivered, the Contractor must train City personnel in the proper, safe operation of the unit and any auxiliary items for a minimum of three shifts of personnel. This training will be conducted by professional, certified instructors, for a one (1) hour period at the Department of Assets, Information and Services facility.

In addition, for each Trailer delivered, the Contractor must provide a structured training program for City trades technicians. These technicians must be trained in diagnostic and preventative maintenance procedures, general maintenance and repair, along with systems reconditioning for the unit and auxiliary items. The training will be conducted by knowledgeable, experienced personnel, for a one (1) hour period at the facility of the Department of Assets, Information and Services.

The Contractor must furnish four Trailer-training manuals and other multimedia training aids to the Department of Assets, Information and Services.

5.11.6. Manuals, Certificates, Applications

One (1) operator's manual and one (1) set of maintenance manuals must be provided with each trailer purchased. All manuals provided must be in English.

For purposes of these specifications, a set of maintenance information must include one (1) complete parts manual, one (1) technical service manual, one (1) complete wiring schematic (if not included with in the service manual), one (1) complete hydraulic diagram, and service and parts manuals for all auxiliary equipment if offered.

Maintenance manuals may be in paper form, electronic form, or in the form of online access.

A minimum of forty-eight 48 hours prior to delivery, the Contractor must furnish the Department of Assets, Information and Services, attention Kevin Campbell, 900 E. 103rd Street, Chicago, IL 60628, with the following items for each unit being delivered: Certificate Of Origin and line-set sheet; and applicable warranty certificate(s).

Completed Illinois Department of Revenue Form #ST556 (for Illinois suppliers) or RUT-25 (for out-of-state suppliers) must be provided a minimum of 48 hours prior to delivery. Forms can be obtained from the Illinois Department of Revenue by calling (800) 356-6302.

NOTE: The above listed documents must indicate the ''CITY of CHICAGO'' as the owner of the vehicle. The assigned unit number and the respective Department name must also be indicated on all documents, in the appropriate places.

No trailers vehicle/equipment deliveries will be accepted unless the Contractor has fulfilled all of the above listed requirements.

For purposes of these specifications, asset of maintenance information must include one (1) complete parts manual, one (1) technical service manual, one (1) complete wiring schematic (if not included with in the service manual) and service and parts manuals for all auxiliary equipment if offered.

5.11.7. Literature / Data

The Contractor must submit 3 copies of each of current published literature and complete technical data for the trailers and all accessory systems with the bid, or upon the request of the Chief Procurement Officer or a designee.

5.12. Group G Purchase of Drop-Deck Bollard Trailers

5.12.1. Overall Design & Dimensions

Trailers must be tandem-axle open-platform trailers specially designed to carry mobile security barriers. It must have a loading deck that can be lowered to ground level for loading and raised for transport by a single operator.

Overall dimensions must be no more than 102” wide, and approximately 21’ long overall.

Deck dimensions must be at least 75” width and 16’ length, including the ramp.

Deck dimensions must be sufficient to carry up to eight Archer safety barriers, or similar barriers.

Total empty trailer weight must be no more than 4,000 lb., with a load capacity of at least 9,000 lbs.

5.12.2. Trailer Frame, Deck and Controls

The trailer frame and tongue must be welded from square or rectangular section steel tubing and steel plate. It must be designed using an A-frame tongue and a main frame with no cross members and a separate, moveable loading deck within the perimeter frame.

The loading deck must be made with a minimum 3/16” heavy duty steel floor plate with a diamond-plate surface for grip, and 24” high walls.

The loading deck must also have a fixed loading ramp on the rear at least 18” long.

The rear of the loading deck must have a minimum 24” high tailgate that opens from the side, and which can be removed quickly.

The loading platform must have E-track rails with snap-in shoring bars attached to the side rails, to lock barriers into place on the platform.

The loading deck must be controlled using hydraulic controls powered by an electric motor.

The deck must be raised using hydraulic pressure and lowered with a gravity return and controlled release of hydraulic pressure.

The deck must be automatically locked (mechanically or hydraulically) in the raised position for transport.

The hydraulic system must be powered by a 12V DC hydraulic motor, powered from a 12V battery with a solar charger.

A remote control must be provided for raising and lowering the deck.

All electric and hydraulic components must be located in a weather-protected compartment in the A-frame tongue of the trailer.

The tongue must also contain a lockable storage compartment for accessories, and a 7,000-lb. quick-adjust jack.

Any and all drilling and cutting that is done to any metal component of the trailer must be done before paint and all coatings are applied. All holes, edges, etc. must be painted, and grommeted when specifically required.

A hitch coupler plate must be fully welded to the end of the tongue. The plate must come with ball coupler of the City's choice in size, to be determined at the time of ordering. The ball must be height- adjustable.

Two 36" safety chains with 3/8" steel links and grab hook must be attached to the nose of the A-frame.

5.12.3. Running Gear

The running gear and all of its components – wheels, tires, axles, hubs, and suspension - must be rated for a minimum load at of at least the payload capacity given. The trailer must have at least two axles.

Tires must be tubeless radials, approved for trailer use, of load range C or higher, and of sufficient size to handle the maximum rated load of the trailer. Wheels must be 16" 5-bolt wheels with an F load rating, painted white or silver. Wheels must come with a bolt-in air valve.

An identical spare wheel and tire assembly must be supplied with the trailer.

The trailer must come equipped with electrically-actuated brakes on all wheels, with a breakaway switch and a 12-volt battery for independent operation of the brakes.

5.12.4. Suspension

Suspension must use rubber springing, with a load rating commensurate to that of the trailer.

Wheel bearings must be greased bearings with grease fittings or stainless-steel bearing buddies.

Trailer must be supplied with heavy-duty steel safety chains with safety hooks.

5.12.5. Lighting and Wiring

The trailer must come equipped with brake and taillights, turn signals, side and rear marker lights, and license plate light. All exterior lights must be LEDs, except the license plate light, for which LEDs are preferred but for which a non-LED light is acceptable. A lighted license plate bracket must be provided at the rear of the trailer.

All wiring must be fully enclosed in plastic or metal wiring conduit. All wiring must be in continuous lengths with adequate slack at terminations and without splices or butt connectors. Scotch-Lock connectors are not allowed.

The trailer must be fitted with a trailer plug and cable mounted on the tongue. The cable must be weather resistant and jacketed and must be of sufficient length to allow for connection to a tow vehicle --approximately six feet. The cable must be fitted with a Cole-Hersee 1254 (or similar) seven-pin (round pin) plug with strain reliever, to match existing City trailers and tow vehicles.

All lighting must be fully compliant with applicable ICC, IDOT and Federal regulations. All lamps must be shock-mounted and installed in protective housings or otherwise adequately protected from external impacts.

Trailer must have red and white reflective conspicuity tape at least 2" wide applied along the length of each side and on the rear.

5.12.6. Painting and Coating

All metal surfaces must be properly prepared for coating to ensure that all surface rust, welding slag, soot, dirt, grease and wax are removed prior to coating.

All steel components of the trailer must be powder coated.

5.12.7. Manufacturer's Services

A warranty of a minimum of one year shall be provided on all parts and labor required for the complete trailer as described above, and all accessories.

5.13. Training and Inspection

The Contractor will provide training, either virtually or onsite at the City's discretion, at no charge, information and training on using the active barriers, including but not limited to, proper transfer, setup, and takedown. Contractor must provide thorough instructions on operating barriers in normal and emergency conditions; use of barrier accessories, use of upgrades or updates. The Contractor will also provide, at no charge to the City, quarterly inspections to ensure the barriers are properly functioning. If, during the inspection, the Contractor determines that repairs are needed then the Contractor will follow the proper repair procedure as outlined in Section 5.10. Training will be provided when new methods of placements are developed, during employment changes and inspection updates. The City will identify the training location within City limits.

5.14. Repair

Contractor will repair damaged barriers at the City's request for Groups B and C the Contractor will be industry certified to repair an active (portable) barriers or Vehicle Impact Protection Devices (VIPD). The standard hours for repairing the active (portable) barriers or Vehicle Impact Protection Devices (VIPD) will be performed under this contract during normal business hours, Monday through Friday, 8:00 a.m. to 5:00 p.m., Central Standard Time. The Contractor is responsible for obtaining all permits and other approval as outlined in this Specification prior to beginning any work. The Contractor must repair Portable Vehicle Impact Devices due to normal wear and tear as well as various weather and conditions caused by impact in the City of Chicago.

Prior to performing the repair services, the Contractor must provide the Department with a quote of the requested services for approval. The quote will detail the labor rate, the cost of replacement parts required (in accordance with the prices provided on the proposal pages), and the estimated time needed to complete all repairs for such services. Upon the City's and the Contractor's agreement as to the maximum price to be charged the City for any job, a work order will be signed by the Contractor and the City, reflecting such maximum price, and Contractor will provide repair services described in the work order. The Contractor may only bill the City for services satisfactorily performed for such job at the lesser of (a) the rate for such work multiplied by the time required by the Contractor to complete the work plus the cost of parts/material, or (b) the maximum amount for the job included in the work order, and Contractor must complete the Services described in the work order at its own expense if its costs exceed the maximum amount in the work order. Any services performed without the approval of the City will be done at the Contractor's own risk and will be subject to non-payment.

Upon completion of the of requested repair services, the Contractor must notify OEMC of the completion of services and provide OEMC a written completion of work document. OEMC will generate a receipt number and provide this to the Contractor. OEMC reserves the right to inspect or confirm project completion prior to generating a receipt number. OEMC will furnish the Contractor with the appropriate receipt number. All prices will be in accordance with the Proposal Lines in the contract.

Items covered under warranty will be repaired/replaced to the City at no cost.

The Contactor will charge the City an overtime rate fee for authorized requests for service during non-regular business hours, Saturdays, Sundays and legal Holidays. The fee will not be charged for scheduled maintenance.

5.15. Price List/Catalog

Bid Lines 1.4, 1.6, 2.6, 2.8, 3.4, and 3.6 request discounts off of the specified catalogs on the proposal pages. If bidder wishes to bid an alternate manufacturer's catalog, as permitted by Section 1.15 Trade Names and Substitutions of this contract, to those manufacturers specified on the proposal pages, bidder must follow the provisions in Section 1.15 for requesting the provision of equivalent manufacturers. Even if the City accepts a different manufacturer as an equivalent for any of these lines, for bid evaluation purposes, pricing will be based upon the prices in the catalogs specified on the proposal pages, and pricing during the term of the agreement will be calculated based upon the bid discount multiplied by the price for the equivalent item in the catalog specified in the proposal pages.

All pricing will be governed by the most current price lists of those manufacturers identified in the proposal pages at the time of bid submittal. The Contractor will be responsible for forwarding new catalogs or supplements of latest revision to all participating City departments, the Comptroller's Office, and Department of Procurement Services as specified in Section 5.5 Price Adjustment during the contract period.

The City will pay an amount for such Parts equal to the Manufacturer's Price at the time of the bid plus the mark-up or discount bid by the Contractor on the proposal pages hereof. When submitting an invoice, Contractor must provide such information as the Commissioner requests substantiating the calculation of pricing, which may include a copy of the catalog page showing the manufacturer's catalog price.

Where "mark-up" is indicated, the City of Chicago will consider a "discounted from list" price from the bidder, provided that the discount is clearly annotated, and that the Chief Procurement Officer determines that doing so is in the best interests of the City. When the City purchases any item from a catalog line, the price that the City pays will be the percentage discount bid multiplied by the price for the item in the catalog specified in the commodity description for that line item. If the winning bidder has proposed an equivalent manufacturer to the catalog specified in the commodity description for that line item, the price that the City pays for any item, even if it is supplied through an alternative catalog, will be the price for the equivalent item in the specified

catalog, multiplied by the discount that the bidder reflected in the bid documents. All catalog prices should be of general applicability to customers of the Manufacturer.

The Contractor's cost for parts (the actual prices the Contractor paid for the specific parts used during a work assignment) must accompany the invoice sent to the City User Department. A copy of the invoice from the Contractor's supplier to the Contractor is required

5.16. Quality of Service

All services performed under this contract must be performed by competent personnel, thoroughly trained, and certified in accordance with industry standards. The Contractor must include copies of all certifications. The services shall be performed in a workmanlike manner using industry accepted practices and established manufacturer procedures.

The Contractor must provide all work (repair and installation) in a satisfactory manner. If the City is not satisfied with the Contractor's work, then the Contractor will make all corrections required, at no expense to the City of Chicago.

5.17. Emergency Orders

An order is classified as an "emergency" when the City requires the Portable Vehicle Impact Devices and/or parts and accessories be delivered less than 48 hours upon notification from the City. The parts and/or accessories will be ordered from the latest Meridian Rapid Defense Group, Delta Scientific, and Global Grab Catalogue or equivalent. The parts and/or accessories will be delivered directly to a City of Chicago location as directed by City Personnel. The purchase price includes delivery and set-up of the Portable Vehicle Impact Devices and/or parts and accessories. The Contractor, or one of its staff, must be available twenty-four (24) hours a day, three hundred sixty-five (365) days of the year, for emergency orders. This is especially critical on weekends, holidays, and/or in the event any active (portable) barriers or Vehicle Impact Protection Devices (VIPD) are needed during an emergency. The required turnaround time and delivery location (within the City of Chicago) will be identified by the City at the time of the request. When the City places an emergency order, the Contractor must take immediate actions to process the order.

The Contractor must provide the City with an invoice, for costs incurred in accordance with the proposal pages, on the first available business day following the order request. The Contractor will also set-up the emergency ordered barriers and parts/accessories. The cost of delivery and set-up are included within the line items for emergency orders.

5.18. Delivery

5.18.1 Delivery for Groups A through F

The Contractor must furnish and deliver to the City and/or authorized City Personnel. If an emergency order is in effect, the Contract must provide the delivery within 48 hours or less as stated in section 5.17.

The Contractor must deliver the identified barrier within seven (7) calendar days after the date of contact from the City to the designated City site. Deliveries must be made between the hours of 8:00 a.m. through 3:00 p.m., Central Time Monday- Friday, excluding City of Chicago recognized holidays. The City reserves the right to add or delete locations as required during the Contract Period.

The Contractor understands and agrees that the initial acceptance of any delivery will not be considered as a waiver of any provision of this Contract and will not relieve the Contractor of its obligation to supply satisfactory goods which conform to the Contract.

However, the Contractor must first immediately notify the Commissioner, or his authorized representative, and report the nature and extent of damages.

When Contractor delivers items, the Contractor will bear the risk of loss or damage to the items in transit and during offloading.

5.19. Exceptions

Any deviations from these specifications must be noted on the Proposal Page or pages attached thereto, with the exact nature of the change outline in sufficient detail. The reason for which deviations were made should also follow if not self-explanatory. Failure of bidder to comply the terms of this paragraph may be cause for rejection.

The City reserves the right to disqualify bids which do not completely meet outline specifications. The impact of exceptions to the specification will be evaluated by the City in determining its need.

CITY OF CHICAGO
Department of Procurement Services
Aileen Velazquez, Chief Procurement Officer
121 North LaSalle Street, Room 806
Chicago, Illinois 60602-1284

MBE & WBE SPECIAL CONDITIONS FOR COMMODITIES OR SERVICES CONTRACTS

ARTICLE 6. SPECIAL CONDITIONS REGARDING MINORITY BUSINESS ENTERPRISE COMMITMENT AND WOMEN BUSINESS ENTERPRISE COMMITMENT FOR COMMODITIES OR SERVICES

6.1. Policy and Terms

It is the policy of the City of Chicago that Local Businesses certified as Minority Owned Business Enterprises (MBE) and Women Owned Business Enterprises (WBE) in accordance with Section 2-92-420 et seq. of the Municipal Code of Chicago and Regulations Governing Certification of Minority and Women-owned Businesses and all other Regulations promulgated under the aforementioned sections of the Municipal Code, as well as MBEs and WBEs certified by Cook County, Illinois, will have full and fair opportunities to participate fully in the performance of this contract. Therefore, the Contractor will not discriminate against any person or business on the basis of race, color, sex, gender identity, age, religion, disability, national origin, ancestry, sexual orientation, marital status, parental status, military discharge status or source of income and will take affirmative action to ensure that women and minority businesses will have the maximum opportunity to compete for and perform subcontracts for supplies or services.

Pursuant to Section 2-92-430 of the Municipal Code of Chicago, the Chief Procurement Officer has established a goal of awarding not less than 25% of the annual dollar value of all non-construction contracts to certified MBEs and 5% of the annual dollar value of all non-construction contracts to certified WBEs.

Accordingly, the Contractor commits to make Good Faith Efforts to expend at least the following percentages of the total contract price (inclusive of any and all modifications and amendments), if awarded, for contract participation by MBEs and WBEs:

MBE Percentage	WBE Percentage
10 %	5 %

(See Form "*Bidders Commitment to Utilize MBE and WBE Firms on No Stated Goals Contract*" for Contract Specific Goals in the case of a contract subject to a bid preference pursuant to MCC 2-92-525.)

This commitment is met by the Contractor's status as a MBE or WBE, or by a joint venture with one or more MBEs or WBEs as prime contractor (to the extent of the MBE or WBE participation in such joint venture), or by subcontracting a portion of the work to one or more MBEs or WBEs, or by the purchase of materials used in the performance of the contract from one or more MBEs or WBEs, or by any combination of the foregoing.

Note: MBE/WBE participation goals are separate and those businesses certified with the City of Chicago as both MBE and WBE may only be listed on a bidder's compliance plan as either an MBE or a WBE, but not both, to demonstrate compliance with the Contract Specific Goals.

The Contractor also may meet all or part of this commitment through credits received pursuant to Section 2-92-530 of the Municipal Code of Chicago for the voluntary use of MBEs or WBEs in private sector contracts.

Pursuant to MCC 2-92-535, the prime contractor may apply be awarded an additional 0.5 percent credit, up to a maximum of a total of 5% additional credit, for every 1% of the value of a contract self-performed by MBEs or WBEs, or combination thereof, that have entered into a mentoring agreement with the contractor or subcontractor-to-subcontractor mentoring agreement. This up to 5% may be applied to the Contract Specific Goals, or it may be in addition to the Contract Specific Goals.

6.2. Definitions

"Area of Specialty" means the description of an MBE or WBE firm's business which has been determined by the Chief Procurement Officer to be most reflective of the MBE or WBE firm's claimed specialty or expertise. Each MBE/WBE letter of certification contains a description of the firm's Area of Specialty. This information is also contained in the Directory (defined below). Credit toward this Contract's MBE and WBE participation goals shall be limited to the participation of firms performing within their Area of Specialty.

> **NOTICE:** *The City of Chicago does not make any representation concerning the ability of any MBE/WBE to perform work within their Area of Specialty. It is the responsibility of all contractors to determine the capability and capacity of MBEs/WBEs to satisfactorily perform the work proposed.*

"Bid" means a bid, proposal, or submittal detailing a description of the services or work to be provided by the contractor in response to a bid solicitation, request for proposal, request for qualification of task order request (issued in accordance with the Master Consulting Agreement) that is issued by the City.

"Bidder" means any person or business entity that submits a bid, proposal, qualification or submittal that seeks to enter into a contract with the City, and includes all partners, affiliates and joint ventures of such person or entity.

"Broker" means a person or entity that fills orders by purchasing or receiving supplies from a third party supplier rather than out of its own existing inventory and provides no commercially useful function other than acting as a conduit between his or her supplier and his or her customer.

"Chief Procurement Officer" or "CPO" means the chief procurement officer of the City of Chicago or his or her designee.

"Commercially Useful Function" means responsibility for the execution of a distinct element of the work of the contract, which is carried out by actually performing, managing, and supervising the work involved, evidencing the responsibilities and risks of a business owner such as negotiating the terms of (sub)contracts, taking on a financial risk commensurate with the contract or its subcontract, responsibility for acquiring the appropriate lines of credit and/or loans, or fulfilling responsibilities as a joint venture partner as described in the joint venture agreement.

"Contract Specific Goals" means the subcontracting goals for MBE and WBE participation established for a particular contract. In the case of a contract subject to the bid incentive set forth in MCC 2-92-525, "Contract Specific Goals" means the utilization percentage for MBEs or WBEs to which contractor committed with its bid.

"Contractor" means any person or business entity that has entered into a contract with the City as described herein, and includes all partners, affiliates, and joint ventures of such person or entity.

"Direct Participation" means the value of payments made to MBE or WBE firms for work that is performed in their Area of Specialty directly related to the performance of the subject matter of the Contract will count as Direct Participation toward the Contract Specific Goals.

"Directory" means the Directory of Certified "Minority Business Enterprises" and "Women Business Enterprises" maintained and published by the City of Chicago. The Directory identifies firms that have been certified as MBEs and WBEs, and includes both the date of their last certification and the area of specialty in which they have been certified. Contractors are responsible for verifying the current certification status of all proposed MBE, and WBE firms.

"Good Faith Efforts" means actions undertaken by a bidder or contractor to achieve a Contract Specific Goal that the CPO or his or her designee has determined, by their scope, intensity, and appropriateness to the objective, can reasonably be expected to fulfill the program's requirements.

"Indirect Participation" refers to the value of payments made to MBE or WBE firms for work that is done in their Area of Specialty related to other aspects of the Contractor's business. (Note: no dollar of such indirect MBE or WBE participation shall be considered in a Good Faith Efforts determination more than once against a contractor's MBE or WBE commitment with respect to all government contracts held by that contractor.)

"Joint venture" means an association of a MBE or WBE firm and one or more other firms to carry out a single, for-profit business enterprise, for which each joint venture partner contributes property, capital, efforts, skills and knowledge, and in which the MBE or WBE is responsible for a distinct, clearly defined portion of the work of the contract and whose share in the capital contribution, control, management, risks, and profits of the joint venture are commensurate with its ownership interest.

"Mentor-Protégé Agreement" means an agreement between a prime and MBE or WBE subcontractor ("Mentoring Agreement") or an agreement between a prime's subcontractor and MBE or WBE subcontractor ("Subcontractor-to-Subcontractor Mentoring Agreement"), pursuant to MCC 2-92-535, that is approved by the City of Chicago and complies with all requirements of MCC 2-92-535 and any rules and regulations promulgated by the Chief Procurement Officer.

"Minority Owned Business Enterprise" or **"MBE"** means a firm awarded certification as a minority owned and controlled business in accordance with City Ordinances and Regulations as well as a firm awarded certification as a minority owned and controlled business by Cook County, Illinois. However, it does not mean a firm that has been found ineligible or which has been decertified by the City or Cook County.

"Municipal Code of Chicago" or **"MCC"** means the Municipal Code of the City of Chicago.

"Proposal Pages" means the section provided within eProcurement where the Bidder enters their pricing. This section is labeled "Lines" or "Price Schedule" within eProcurement.

"Supplier" or **"Distributor"** refers to a company that owns, operates, or maintains a store, warehouse or other establishment in which materials, supplies, articles or equipment are bought, kept in stock and regularly sold or leased to the public in the usual course of business. A regular distributor or supplier is a firm that owns, operates, or maintains a store, warehouse, or other establishment in which the materials or supplies required for performance of a contract are bought, kept in stock, and regularly sold to the public in the usual course of business. To be a regular distributor the firm must engage in, as its principal business and in its own name, the purchase and sale of the products in question. A regular distributor in such bulk items as steel, cement, gravel, stone, and petroleum products need not keep such products in stock if it owns or operates distribution equipment.

"Women Owned Business Enterprise" or **"WBE"** means a firm awarded certification as a women owned and controlled business in accordance with City Ordinances and Regulations as well as a firm awarded certification as a women owned business by Cook County, Illinois. However, it does not mean a firm that has been found ineligible or which has been decertified by the City or Cook County.

6.3. Joint Ventures

The formation of joint ventures to provide MBEs and WBEs with capacity and experience at the prime contracting level, and thereby meet Contract Specific Goals (in whole or in part) is encouraged. A joint

venture may consist of any combination of MBEs, WBEs, and non-certified firms as long as one member is an MBE or WBE.

a. The joint venture may be eligible for credit towards the Contract Specific Goals only if:

i. The MBE or WBE joint venture partner's share in the capital contribution, control, management, risks and profits of the joint venture is equal to its ownership interest;

ii. The MBE or WBE joint venture partner is responsible for a distinct, clearly defined portion of the requirements of the contract for which it is at risk;

iii. Each joint venture partner executes the bid to the City; and

iv. The joint venture partners have entered into a written agreement specifying the terms and conditions of the relationship between the partners and their relationship and responsibilities to the contract, and all such terms and conditions are in accordance with the conditions set forth in Items i, ii, and iii above in this Paragraph a.

b. The Chief Procurement Officer shall evaluate the proposed joint venture agreement, the Schedule B submitted on behalf of the proposed joint venture, and all related documents to determine whether these requirements have been satisfied. The Chief Procurement Officer shall also consider the record of the joint venture partners on other City of Chicago contracts. The decision of the Chief Procurement Officer regarding the eligibility of the joint venture for credit towards meeting the Contract Specific Goals, and the portion of those goals met by the joint venture, shall be final.

The joint venture may receive MBE or WBE credit for work performed by the MBE or WBE joint venture partner(s) equal to the value of work performed by the MBE or WBE with its own forces for a distinct, clearly defined portion of the work.

Additionally, if employees of the joint venture entity itself (as opposed to employees of the MBE or WBE partner) perform the work, then the value of the work may be counted toward the Contract Specific Goals at a rate equal to the MBE or WBE firm's percentage of participation in the joint venture as described in Schedule B.

The Chief Procurement Officer may also count the dollar value of work subcontracted to other MBEs and WBEs. Work performed by the forces of a non-certified joint venture partner shall not be counted toward the Contract Specific Goals.

c. **Schedule B: MBE/WBE Affidavit of Joint Venture**

Where the bidder's Compliance Plan includes the participation of any MBE or WBE as a joint venture partner, the bidder must submit with its bid a Schedule B and the proposed joint venture agreement. These documents must both clearly evidence that the MBE or WBE joint venture partner(s) will be responsible for a clearly defined portion of the work to be performed, and that the MBE's or WBE's responsibilities and risks are proportionate to its ownership percentage. The proposed joint venture agreement must include specific details related to:

i. The parties' contributions of capital, personnel, and equipment and share of the costs of insurance and bonding;

ii. Work items to be performed by the MBE's or WBE's own forces and/or work to be performed by employees of the newly formed joint venture entity;

iii. Work items to be performed under the supervision of the MBE or WBE joint venture partner; and

iv. The MBE's or WBE's commitment of management, supervisory, and operative personnel to the performance of the contract.

NOTE: Vague, general descriptions of the responsibilities of the MBE or WBE joint venture partner do not provide any basis for awarding credit. For example, descriptions such as "participate in the budgeting process," "assist with hiring," or "work with managers to improve customer service" do not identify distinct, clearly defined portions of the work. Roles assigned should require activities that are performed on a regular, recurring basis rather than as needed. The roles must also be pertinent to the nature of the business for which credit is being sought. For instance, if the scope of work required by the City entails the delivery of goods or services to various sites in the City, stating that the MBE or WBE joint venture partner will be responsible for the performance of all routine maintenance and all repairs required to the vehicles used to deliver such goods or services is pertinent to the nature of the business for which credit is being sought.

6.4. Counting MBE/WBE Participation Toward the Contract Specific Goals

Refer to this section when preparing the MBE/WBE compliance plan and completing Schedule D-1 for guidance on what value of the participation by MBEs and WBEs will be counted toward the stated Contract Specific Goals. The "Percent Amount of Participation" depends on whether and with whom a MBE or WBE subcontracts out any portion of its work and other factors.

Firms that are certified as both MBE and WBE may only be listed on a bidder's compliance plan as either a MBE or a WBE to demonstrate compliance with the Contract Specific Goals. For example, a firm that is certified as both a MBE and a WBE may only be listed on the bidder's compliance plan under one of the categories, but not both. Except as provided in MCC 2-92-525(b)(2), only Payments made to MBE and WBE firms that meet BOTH the Commercially Useful Function and Area of Specialty requirements above will be counted toward the Contract Specific Goals.

a. Only expenditures to firms that perform a Commercially Useful Function as defined above may count toward the Contract Specific Goals.

   i. The CPO will determine whether a firm is performing a commercially useful function by evaluating the amount of work subcontracted, whether the amount the firm is to be paid under the contract is commensurate with the work it is actually performing and the credit claimed for its performance of the work, industry practices, and other relevant factors.

   ii. A MBE or WBE does not perform a commercially useful function if its participation is only required to receive payments in order to obtain the appearance of MBE or WBE participation. The CPO may examine similar commercial transactions, particularly those in which MBEs or WBEs do not participate, to determine whether non MBE and non WBE firms perform the same function in the marketplace to make a determination.

   iii. Indications that a subcontractor is not performing a commercially useful function include, but are not limited to, labor shifting and equipment sharing or leasing arrangements with the prime contractor or a first tier subcontractor.

b. Only the value of the dollars paid to the MBE or WBE firm for work that it performs in its Area of Specialty in which it is certified counts toward the Contract Specific Goals, except as provided in MCC 2-92-525(b)(2).

c. For maintenance, installation, repairs or inspection, or professional services, if the MBE or WBE performs the work itself: 100% of the value of work actually performed by the MBE's or WBE's own forces shall be counted toward the Contract Specific Goals, including the cost of supplies and materials purchased or equipment leased by the MBE or WBE from third parties or second tier subcontractors in order to perform its (sub)contract with its own forces (except supplies and equipment the MBE or WBE subcontractor purchases or leases from the prime contractor or its

affiliate). 0% of the value of work at the project site that a MBE or WBE subcontracts to a non-certified firm counts toward the Contract Specific Goals.

d. If the MBE or WBE is a manufacturer: 100% of expenditures to a MBE or WBE manufacturer for items needed for the Contract shall be counted toward the Contract Specific Goals. A manufacturer is a firm that operates or maintains a factory or establishment that produces on the premises the materials or supplies obtained by the bidder or contractor.

e. If the MBE or WBE is a distributor or supplier: 60% of expenditures for materials and supplies purchased from a MBE or WBE that is certified as a regular dealer or supplier shall be counted toward the Contract Specific Goals.

f. If the MBE or WBE is a broker:

   i. Zero percent (0%) of expenditures paid to brokers will be counted toward the Contract Specific Goals.

   ii. As defined above, Brokers provide no commercially useful function.

g. If the MBE or WBE is a member of the joint venture contractor/bidder:

   i. A joint venture may count the portion of the total dollar value of the contract equal to the distinct, clearly defined portion of the work of the contract that the MBE or WBE performs with its own forces toward the Contract Specific Goals; or

   ii. If employees of this distinct joint venture entity perform the work then the value of the work may be counted toward the Contract Specific Goals at a rate equal to the MBE or WBE firm's percentage of participation in the joint venture as described in the Schedule B.

   iii. A joint venture may also count the dollar value of work subcontracted to other MBEs and WBEs.

h. If the MBE or WBE subcontracts out any of its work:

   i. 100% of the value of the work subcontracted to other MBEs or WBEs performing work in its Area of Specialty may be counted toward the Contract Specific Goals.

   ii. 0% of the value of work that a MBE or WBE subcontracts to a non-certified firm counts toward the Contract Specific Goals (except as allowed by (c) above).

   iii. The fees or commissions charged for providing a bona fide service, such as professional, technical, consulting or managerial services or for providing bonds or insurance and assistance in the procurement of essential personnel, facilities, equipment, materials or supplies required for performance of the Contract, provided that the fee or commission is determined by the Chief Procurement Officer to be reasonable and not excessive as compared with fees customarily allowed for similar services.

   iv. The fees charged for delivery of materials and supplies required on a job site (but not the cost of the materials and supplies themselves) when the hauler, trucker, or delivery service is not also the manufacturer of or a regular dealer in the materials and supplies, provided that the fee is determined by the Chief Procurement Officer to be reasonable and not excessive as compared with fees customarily allowed for similar services.

   v. The fees or commissions charged for providing any bonds or insurance, but not the cost of the premium itself, specifically required for the performance of the Contract, provided that the fee or commission is determined by the Chief Procurement Officer to

be reasonable and not excessive as compared with fees customarily allowed for similar services.

6.5. Regulations Governing Reductions to or Waiver of MBE/WBE Goals

The following Regulations set forth the standards to be used in determining whether or not a reduction or waiver of the MBE/WBE commitment goals of a particular contract is appropriate. If a bidder determines that it is unable to meet the MBE and/or WBE Contract-Specific Goals on a City of Chicago contract, a written request for the reduction or waiver of the commitment must be included in the bid or proposal.

The written request for reduction or waiver from the commitment must be in the form of a signed petition for grant of relief from the MBE/WBE percentages submitted on the bidder's letterhead, and must demonstrate that all required efforts as set forth in this document were taken to secure eligible Minority and Women Business Enterprises to meet the commitments. The Chief Procurement Officer or designee shall determine whether the request for the reduction or waiver will be granted.

A bidder will be considered responsive to the terms and conditions of these Regulations if, at the time of bid, it submits a waiver request and all supporting documentation that adequately addresses the conditions for waiver of MBE/WBE goals, including proof of notification to assist agencies except:

- Bidders responding to Request for Proposals (RFPs) who have been identified as a short listed candidate and/or a prospective awardee will be given a designated time allowance, but no more than fourteen (14) calendar days to submit to the Department of Procurement Services complete documentation that adequately addresses the conditions for waiver described herein; and
- Bidders responding to Request for Information and or Qualifications (RFI/RFQs) deemed by the Chief Procurement Officer or authorized designee to be the most responsive and responsible shall submit documentation that adequately addresses the conditions for waiver described herein during negotiations.

Failure to submit documentation sufficient to support the waiver request will cause the bid/proposal to be found non-responsive by the Chief Procurement Officer, and the bid/proposal will be rejected. In such cases the remedies to be taken by the Chief Procurement Officer, in his or her discretion, may include, but are not limited to, forfeiture of bid deposit; negotiating with the next lowest bidder; or re-advertising the bid/proposal. All bidders must submit all required documents at the time of bid opening to expedite the contract award.

6.5.1. Direct Participation

Each of the following elements must be present in order to determine whether or not such a reduction or waiver is appropriate.

a. The bidder has documented the unsuccessful solicitation for either subcontractors or joint venture partners of at least 50% (or at least five when there are more than eleven certified firms in the commodity area) of the appropriate certified MBE/WBE firms to perform any direct work identified or related to the advertised bid/proposal. Documentation must include but is not necessarily limited to:

    1. A detailed statement of efforts to identify and select portions of work identified in the bid solicitation for subcontracting to certified MBE/WBE firms;

    2. A listing of all MBE/WBE firms contacted that includes:

        - Name, address, telephone number and email of MBE/WBE firms solicited;
        - Date and time of contact;

- Method of contact (written, telephone, transmittal of facsimile documents, email, etc.)

3. Copies of letters or any other evidence of mailing that substantiates outreach to MBE/WBE vendors that includes:
    - Project identification and location;
    - Classification/commodity of work items for which quotations were sought;
    - Date, item and location for acceptance of subcontractor bid proposals;
    - Detailed statement which summarizes direct negotiations with appropriate MBE/WBE firms for specific portions of the work and indicates why negotiations were unsuccessful;
    - Affirmation that Good Faith Efforts have been demonstrated by:
        - choosing subcontracting opportunities likely to achieve MBE/WBE goals; and
        - not imposing any limiting conditions which were not mandatory for all subcontractors; and
        - providing notice of subcontracting opportunities to M/WBE firms and assist agencies at least five (5) business days in advance of the initial bid due date; and
        - documented efforts or actual commitment to the indirect participation of MBE/WBE firms.

OR

b. Subcontractor participation will be deemed excessively costly when the MBE/WBE subcontractor proposal exceeds the average price quoted by more than twenty percent (20%). In order to establish that a subcontractor's quote is excessively costly, the bidder must provide the following information:

1. A detailed statement of the work identified for MBE/WBE participation for which the bidder asserts the MBE/WBE quote(s) were excessively costly (in excess of 20% higher).
    - A listing of all potential subcontractors contacted for a quotation on that work item;
    - Prices quoted for the subcontract in question by all such potential subcontractors for that work item.
2. Other documentation which demonstrates to the satisfaction of the Chief Procurement Officer that the MBE/WBE proposals are excessively costly, even though not in excess of 20% higher than the average price quoted. This determination will be based on factors that include, but are not limited to the following:
    - The City's estimate for the work under a specific subcontract;
    - The bidder's own estimate for the work under the subcontract;
    - An average of the bona fide prices quoted for the subcontract;

- Demonstrated increase in other contract costs as a result of subcontracting to the M/WBE or other firm.

6.5.2. Assist Agency Participation in wavier/reduction requests

Every waiver and/or reduction request must include evidence that the bidder has provided timely notice of the need for subcontractors to an appropriate association/assist agency representative of the MBE/WBE business community. This notice must be given at least five (5) business days in advance of the initial bid due date.

The notice requirement of this Section will be satisfied if a bidder contacts at least one of the associations on Attachment A to these Regulations when the prime contractor seeks a waiver or reduction in the utilization goals. Attachment B to these Regulations provides the letter format that a prime contractor may use. Proof of notification prior to bid submittal (e.g. certified mail receipt or facsimile transmittal receipt) will be required to be submitted with the bid for any bid/proposal to be deemed responsive. If deemed appropriate, the Contract Compliance Officer may contact the assist agency for verification of notification.

6.5.3. Impracticability

If the Chief Procurement Officer determines that a lesser MBE and/or WBE percentage standard is appropriate with respect to a particular contract subject to competitive bidding prior to the bid solicitations for such contract, bid specifications shall include a statement of such revised standard.

The requirements set forth in these Regulations (this subsection 6.5 "Regulations Governing Reductions to or Waiver of MBE/WBE Goals") shall not apply where the Chief Procurement Officer determines prior to the bid solicitations that MBE/WBE subcontractor participation is impracticable.

This may occur whenever the Chief Procurement Officer determines that for reasons of time, need, industry practices or standards not previously known by the Chief Procurement Officer, or such other extreme circumstances as may be deemed appropriate, such a Waiver is in the best interests of the City. This determination may be made in connection with a particular contract, whether before the contract is let for bid, during the bid or award process, before or during negotiation of the contract, or during the performance of the contract.

For all notifications required to be made by bidders, in situations where the Chief Procurement Officer has determined that time is of the essence, documented telephone contact may be substituted for letter contact.

6.6. Procedure to Determine Bid Compliance

A bid may be rejected as non-responsive if it fails to submit one or more of the following with its bid demonstrating its Good Faith Efforts to meet the Contract Specific Goals by reaching out to MBEs and WBEs to perform work on the contract:

- An MBE/WBE compliance plan demonstrating how the bidder plans to meet the Contract Specific Goals; and/or
- A request for reduction or waiver of the Contract Specific Goals in accordance with Section 2-92-450 of the MCC.

In the case of a bid utilizing the "Bid Incentive to Encourage MBE and WBE Utilization" pursuant to MCC 2-92-525(b)(2), failure to submit an MBE/WBE compliance plan demonstrating how the bidder plans to meet the Contract Specific Goal to which the bidder has committed will not result in rejection of the bid, but the bidder may be found ineligible for the bid incentive.

Except as provided in MCC 2-92-525(b)(2), only compliance plans utilizing MBE and WBE firms that meet BOTH the Commercially Useful Function and Area of Specialty requirements will be counted toward the Contract Specific Goals.

The following Schedules and described documents constitute the bidder's MBE/WBE proposal, and must be submitted in accordance with the guidelines stated:

(1) Schedule C-1: Letter of Intent from MBE/WBE to Perform as Subcontractor, Supplier and/or Consultant.

The bidder must submit the appropriate Schedule C-1 with the bid for each MBE and WBE included on the Schedule D-1. Suppliers must submit the Schedule C-1 for Suppliers, first tier subcontractors must submit a Schedule C-1 for Subcontractors to the Prime Contractor and second or lower tier subcontractors must submit a Schedule C-1 for second tier Subcontractors. The City encourages subcontractors to utilize the electronic fillable format Schedule C-1, which is available at the Department of Procurement Services website, http://cityofchicago.org/forms. Each Schedule C-1 must be executed by each MBE and WBE and accurately detail the work to be performed by the MBE or WBE and the agreed upon rates/prices. Each Schedule C must also include a separate sheet as an attachment on which the MBE or WBE fully describes its proposed scope of work, including a description of the commercially useful function being performed by the MBE or WBE in its Area of Specialty. If a facsimile copy of the Schedule C-1 has been submitted with the bid, an executed original Schedule C-1 must be submitted by the bidder for each MBE and WBE included on the Schedule D-1 within five business days after the date of the bid opening.

Failure to submit a completed Schedule C-1 in accordance with this section shall entitle the City to deem the bid/proposal non-responsive and therefore reject the bid/proposal.

(2) Letters of Certification.

A copy of each proposed MBE/WBE firm's current Letter of Certification from the City of Chicago or Cook County Illinois, must be submitted with the bid/proposal. All Letters of Certification issued by the City of Chicago and Cook County include a statement of the MBE/WBE firm's Area of Specialty. The MBE/WBE firm's scope of work, as detailed by their Schedule C-1, must conform to their stated Area of Specialty. Letters of Certification for firms that the City or Cook County has found ineligible or has decertified will not be accepted.

(3) Schedule B: Affidavit of Joint Venture, and Joint Venture Agreements (if applicable).

If the bidder's MBE/WBE proposal includes the participation of a MBE/WBE as joint venture on any tier (either as the bidder or as a subcontractor), the bidder must provide a copy of the joint venture agreement and a Schedule B along with all other requirements listed in Section 6.3, "Joint Ventures," above. In order to demonstrate the MBE/WBE partner's share in the ownership, control, management responsibilities, risks and profits of the joint venture, the proposed joint venture agreement must include specific details related to: (1) contributions of capital and equipment; (2) work responsibilities or other performance to be undertaken by the MBE/WBE; and (3) the commitment of management, supervisory and operative personnel employed by the MBE/WBE to be dedicated to the performance of the contract. The joint venture agreement must also clearly define each partner’s authority to contractually obligate the joint venture and each partner's authority to expend joint venture funds (e.g., check signing authority).

(4) Schedule D-1: Required Schedules Regarding MBE/WBE Utilization

Bidders must submit, together with the bid, a completed Schedule D-1 committing them to the utilization of each listed MBE/WBE firm. The City encourages bidders to utilize the electronic fillable format Schedule D-1, which is available at the Department of Procurement Services website, http://cityofchicago.org/forms. Except in cases where the bidder has submitted a request for a complete waiver of or variance from the MBE/WBE commitment in accordance with Section 6.5 "Regulations Governing Reductions to or Waiver of MBE/WBE Goals" herein, the bidder must commit to the expenditure of a specific dollar amount of participation by each

MBE/WBE firm included on their Schedule D-1. The total dollar commitment to proposed MBEs must at least equal the MBE goal, and the total dollar commitment to proposed WBEs must at least equal the WBE goal. Bidders are responsible for calculating the dollar equivalent of the MBE and WBE goals as percentages of their total base bids or in the case of Term Agreements, depends upon requirements agreements and blanket agreements, as percentages of the total estimated usage. All commitments made by the bidder's Schedule D-1 must conform to those presented in the submitted Schedule C-1. If Schedule C-1 is submitted after the opening, the bidder may submit a revised Schedule D-1 (executed and notarized to conform with the Schedules C-1). Bidders shall not be permitted to add MBEs or WBEs after bid opening to meet the Contract Specific Goals, however, contractors are encouraged to add additional MBE/WBE vendors to their approved compliance plan during the performance of the contract when additional opportunities for participation are identified. Except in cases where substantial and documented justification is provided, bidders will not be allowed to reduce the dollar commitment made to any MBE or WBE in order to achieve conformity between the Schedules C-1 and D-1.

All commitments for joint venture agreements must be delineated in the Schedule B.

(5) Application for Approval of Mentor Protégé Agreement
Any applications for City approval of a Mentor Protégé agreement must be included with the bid. If the application is not approved, the bidder must show that it has made good faith efforts to meet the contract specific goals.

6.7. Reporting Requirements During the Term of the Contract

a. The Contractor will, not later than thirty (30) calendar days from the award of a contract by the City, execute formal contracts or purchase orders with the MBEs and WBEs included in their approved MBE/WBE Utilization Plan. These written agreements will be made available to the Chief Procurement Officer upon request.

b. The Contractor will be responsible for reporting payments to all subcontractors on a monthly basis in the form of an electronic report. Upon the first payment issued by the City of Chicago to the contractor for services performed, on the first day of each month and every month thereafter, email and or fax audit notifications will be sent out to the Contractor with instructions to report payments that have been made in the prior month to each subcontractor. The reporting of payments to all subcontractors must be entered into the Certification and Compliance Monitoring System (C2), or whatever reporting system is currently in place, on or before the fifteenth (15th) day of each month.

c. Once the prime Contractor has reported payments made to each subcontractor, including zero dollar amount payments, the subcontractor will receive an email and or fax notification requesting them to log into the system and confirm payments received. All monthly confirmations must be reported on or before the 20th day of each month. Contractor and subcontractor reporting to the C2 system must be completed by the 25th of each month or payments may be withheld.

d. All subcontract agreements between the contractor and MBE/WBE firms or any first tier non-certified firm and lower tier MBE/WBE firms must contain language requiring the MBE/WBE to respond to email and/or fax notifications from the City of Chicago requiring them to report payments received for the prime or the non-certified firm.

Access to the Certification and Compliance Monitoring System (C2), which is a web based reporting system, can be found at: https://chicago.mwdbe.com

e. The Chief Procurement Officer or any party designated by the Chief Procurement Officer, shall have access to the contractor's books and records, including without limitation payroll records, tax returns and records and books of account, to determine the contractor's compliance with its commitment to MBE and WBE participation and the status of any MBE or WBE performing any portion of the contract. This provision shall be in addition to, and not a substitute for, any other provision allowing inspection of the contractor's records by any officer or official of the City for any purpose.

f. The Contractor shall maintain records of all relevant data with respect to the utilization of MBEs and WBEs, retaining these records for a period of at least five years after project closeout. Full access to these records shall be granted to City, federal or state authorities or other authorized persons.

6.8. Changes to Compliance Plan

6.8.1. Permissible Basis for Change Required

No changes to the Compliance Plan or contractual MBE and WBE commitments or substitution of MBE or WBE subcontractors may be made without the prior written approval of the Contract Compliance Officer. Unauthorized changes or substitutions, including performing the work designated for a subcontractor with the contractor's own forces, shall be a violation of these Special Conditions and a breach of the contract with the City, and may cause termination of the executed Contract for breach, and/or subject the bidder or contractor to contract remedies or other sanctions. The facts supporting the request for changes must not have been known nor reasonably could have been known by the parties prior to entering into the subcontract. Bid shopping is prohibited. The bidder or contractor must negotiate with the subcontractor to resolve the problem. If requested by either party, the Department of Procurement Services shall facilitate such a meeting. Where there has been a mistake or disagreement about the scope of work, the MBE or WBE can be substituted only where an agreement cannot be reached for a reasonable price for the correct scope of work.

Substitutions of a MBE or WBE subcontractor shall be permitted only on the following basis:

a) Unavailability after receipt of reasonable notice to proceed;

b) Failure of performance;

c) Financial incapacity;

d) Refusal by the subcontractor to honor the bid or proposal price or scope;

e) Mistake of fact or law about the elements of the scope of work of a solicitation where a reasonable price cannot be agreed;

f) Failure of the subcontractor to meet insurance, licensing or bonding requirements;

g) The subcontractor's withdrawal of its bid or proposal; or

h) De-certification of the subcontractor as a MBE or WBE (graduation from the MBE/WBE program does not constitute de-certification).

i) Termination of a Mentor Protégé Agreement.

6.8.2. Procedure for Requesting Approval

If it becomes necessary to substitute a MBE or WBE or otherwise change the Compliance Plan, the procedure will be as follows:

a) The bidder or contractor must notify the Contract Compliance Officer and Chief Procurement Officer in writing of the request to substitute a MBE or WBE or otherwise change the Compliance Plan. The request must state specific reasons for the substitution or change. A letter from the

MBE or WBE to be substituted or affected by the change stating that it cannot perform on the contract or that it agrees with the change in its scope of work must be submitted with the request.

b) The City will approve or deny a request for substitution or other change within 15 business days of receipt of the written request.

c) Where the bidder or contractor has established the basis for the substitution to the satisfaction of the Chief Procurement Officer, it must make Good Faith Efforts to meet the Contract Specific Goal by substituting a MBE or WBE subcontractor. Documentation of a replacement MBE or WBE, or of Good Faith Efforts, must meet the requirements in section 5. If the MBE or WBE Contract Specific Goal cannot be reached and Good Faith Efforts have been made, as determined by the Chief Procurement Officer, the bidder or contractor may substitute with a non-MBE or non-WBE.

d) If a bidder or contractor plans to hire a subcontractor for any scope of work that was not previously disclosed in the Compliance Plan, the bidder or contractor must obtain the approval of the Chief Procurement Officer to modify the Compliance Plan and must make Good Faith Efforts to ensure that MBEs or WBEs have a fair opportunity to bid on the new scope of work.

e) A new subcontract must be executed and submitted to the Contract Compliance Officer within five business days of the bidder's or contractor's receipt of City approval for the substitution or other change.

The City shall not be required to approve extra payment for escalated costs incurred by the contractor when a substitution of subcontractors becomes necessary to comply with MBE/WBE contract requirements.

6.9. Non-Compliance and Damages

Without limitation, the following shall constitute a material breach of this contract and entitle the City to declare a default, terminate the contract, and exercise those remedies provided for in the contract, at law or in equity: (1) failure to demonstrate Good Faith Efforts, except in the case of a contract where a bid incentive under MCC 2-92-525 was taken into consideration in the award; and (2) disqualification as a MBE or WBE of the contractor or any joint venture partner, subcontractor or supplier if its status as an MBE or WBE was a factor in the award of the contract and such status was misrepresented by the contractor.

Payments due to the contractor may be withheld until corrective action is taken.

Pursuant to MCC 2-92-445 or 2-92-740, as applicable, remedies or sanctions may include a penalty in the amount of the discrepancy between the amount of the commitment in the Compliance Plan, as such amount may be amended through change orders or otherwise over the term of the contract, and the amount paid to MBEs or WBEs, and disqualification from contracting or subcontracting on additional City contracts for up to three years. The consequences provided herein shall be in addition to any other criminal or civil liability to which such entities may be subject.

The contractor shall have the right to protest the final determination of non-compliance and the imposition of any penalty by the Chief Procurement Officer pursuant to MCC 2-92-445 or 2-92-740, within 15 business days of the final determination.

In the case of a in the case of a contract for which a bid incentive under MCC 2-92-525 was taken into consideration in the award, any contractor that has failed to retain the percentage of MBE or WBE subcontractor committed to in order for the bid incentive to be allocated will be fined an amount equal to three times the amount of the bid incentive allocated, unless the contractor can demonstrate that due to circumstances beyond the contractor's control, the contractor for good cause was unable to retain the percentage of MBE or WBE subcontractors throughout the duration of the contract period.

6.10. Arbitration

a) In the event a contractor has not complied with the contractual MBE/WBE percentages in its Schedule D, underutilization of MBEs/WBEs shall entitle the affected MBE/WBE to recover from the contractor damages suffered by such entity as a result of being underutilized; provided, however, that this provision shall not apply to the extent such underutilization occurs pursuant to a waiver or substitution approved by the City. The Ordinance and contracts subject thereto provide that any disputes between the contractor and such affected MBEs/WBEs regarding damages shall be resolved by binding arbitration before an independent arbitrator other than the City, with reasonable expenses, including attorney's fees, being recoverable by a prevailing MBE/WBE in accordance with these regulations. This provision is intended for the benefit of any MBE/WBE affected by underutilization and grants such entity specific third party beneficiary rights. Any rights conferred by this regulation are non-waivable and take precedence over any agreement to the contrary, including but not limited to those contained in a subcontract, suborder, or communicated orally between a contractor and a MBE/WBE.

b) An MBE/WBE desiring to arbitrate shall contact the contractor in writing to initiate the arbitrative process. Except as otherwise agreed to in writing by the affected parties subject to the limitation contained in the last sentence of the previous paragraph, within ten (10) calendar days of the contractor receiving notification of the intent to arbitrate from the MBE/WBE the above-described disputes shall be arbitrated in accordance with the Commercial Arbitration Rules of the American Arbitration Association (AAA), a not-for-profit agency, with an office at 225 North Michigan Avenue, Suite 2527, Chicago, Illinois 60601-7601 [Phone: (312) 616-6560; Fax: (312) 819-0404]. All such arbitrations shall be initiated by the MBE/WBE filing a demand for arbitration with the AAA; shall be conducted by the AAA; and held in Chicago, Illinois.

c) All arbitration fees are to be paid pro rata by the parties, however, that the arbitrator is authorized to award reasonable expenses, including attorney and arbitrator fees, as damages to a prevailing MBE/WBE.

d) The MBE/WBE must send the City a copy of the Demand for Arbitration within ten (10) calendar days after it is filed with the AAA. The MBE/WBE also must send the City a copy of the decision of the arbitrator within ten (10) calendar days of receiving such decision. Judgment upon the award rendered by the arbitrator may be entered in any court of competent jurisdiction.

6.11. Equal Employment Opportunity

Compliance with MBE and WBE requirements will not diminish or supplant equal employment opportunity and civil rights provisions as required by law.

6.12. Attachments and Schedules

The following attachments and schedules follow, they may also be downloaded from the Internet at: http://www.cityofchicago.org/forms

- Attachment A: Assist Agencies
- Attachment B: Sample Format for Requesting Assist Agency Comments on Bidder's Request for Reduction or Waiver of MBE/WBE Goals
- Schedule B: Affidavit of Joint Venture (MBE/WBE)
- Schedule C-1: Letter of Intent From MBE/WBE To Perform As Subcontractor, Supplier and/or Consultant
- Schedule D-1: Compliance Plan Regarding MBE/WBE Utilization

Attachment A: Assist Agency List (Revised October **2021)**
Assist Agency List Follows

CHI | DPS
Department of Procurement Services

CITY OF CHICAGO
ASSIST AGENCY LIST

Assist Agencies are comprised of not-for-profit agencies and/or chamber of commerce agencies that represent the interest of small, minority and/or women owned businesses.

51st Street Business Association * 220 E. 51st Street Chicago, IL 60615 773-285-3401 773-285-3407 the51ststreetbusinessassociation@yahoo.com www.51stStreetChicago.com Maintains list of certified firms: Yes Provides training for businesses: Yes	**African American Contractors Association – AACA *** P.O. Box #19670 Chicago, IL 60619 312-915-5960 aacanatlassoc@gmail.com www.aacanatl.org Maintains list of certified firms: Yes Provides training for businesses: Yes
Angel of God Resource Center, Inc. * 14527 S. Halsted Riverdale, IL 60827 708-392-9323 708-880-0121 info.aogrc@gmaiil.com www.angelofgodresourcecenter.org Maintains list of certified firms: Yes Provides training for businesses: Yes	**AeroStar Avion Institute** 18270 Anthony Avenue Country Club Hills, IL 60478 312 883-6386 www.avioninstitute.org aai@avioninstitute.org/tholmes@aerostarcorp.com Maintains list of certified firms: Yes Provides training for businesses: Yes
Association of Asian Construction Enterprises (AACE) * 712 W. Root Street Chicago, IL 60609 312-595-2010 admin@aacechicago.com www.aacechicago.com Maintains list of certified firms: Yes Provides training for businesses: No	**Austin African American Business Networking Assoc.** 5820 W. Chicago Ave. Chicago, IL 60651 773-626-4497 info@aaabna.org www.aaabna.org Maintains list of certified firms: No Provides training for businesses: Yes
Better Business Bureau of Chicago/Northern Illinois 330 N Wabash, Suite 3120 Chicago, IL 60611 312 832-0500 tjohnson@chicago.bbb.org www.bbb.org/chicago Maintains list of certified firms: Yes Provides training for businesses: Yes	**Black Contractors Owners and Executives *** 7811 S. Stony Island Ave. Chicago, IL 60649 773-346-5658 773-346-5659 admin@bcoechicago.org www.bcoechicago.org Maintains list of certified firms: No Provides training for businesses: No
Black Contractors United * 12000 S. Marshfield Ave. Calumet Park, IL 60827 708-389-5730 708-389-5735 www.blackcontractorsunited.com Maintains list of certified firms: Yes Provides training for businesses: Yes	**BOP Project 5000 NFP** 644 E. 79th Street Chicago, IL 60619 773-891-5939 773-304-1903 bopbizcenter@gmail.com Maintains list of certified firms: Yes Provides training for businesses: Yes

**Prime Contractors should contact agency with subcontracting opportunities to connect certified firms.*

Business Leadership Council * 150 N. Michigan Avenue, Suite 2400 Chicago, IL 60601 Office: 312-628-7841 info@BLCchicago.com alavelle@blcchicago.com blcchicago.com Maintains list of certified firms: Yes Provides training for businesses: No	**Chatham Business Association Small Business Dev.*** 800 E. 78th Street Chicago, IL 60619 773-994-5006 773-855-8905 admin@cbaworks.org www.cbaworks.org Maintains list of certified firms: Yes Provides training for businesses: Yes
Chicagoland Associated General Contractors* One Oakbrook Terrace, Suite 210 Oakbrook Terrace Chicago, Illinois 60178 773-444-0465 info@chicagolandagc.org www.chicagolandagc.org Maintains list of certified firms: Yes Provides training for businesses: Yes	**Chicago Minority Supplier Development Council Inc. *** 216 West Jackson Blvd Suite 600 Chicago, IL 60606 312-755-8880 312-755-8890 Fax info@chicagomsdc.org www.chicagomsdc.org Maintains list of certified firms: Yes Provides training for businesses: Yes
Chicago Urban League * 4510 S. Michigan Ave. Chicago, IL 60653 773-285-5800 jjohnson@chiul.org Maintains list of certified firms: Yes Provides training for businesses: Yes	**Chicago Women in Trades (CWIT)** 2444 W. 16th Street Chicago, IL 60608 312-942-1444 jvellinga@cwit2.org www.chicagowomenintrades2.org Maintains list of certified firms: No Provides training for businesses: Yes
Contractor Advisors Business Development Corp. * 1507 E. 53rd Street, Suite 906 Chicago, IL. 60615 312-436-0301 info@contractoradvisors.us www.contractoradvisors.us Maintains list of certified firms: Yes Provides training for businesses: Yes	**Construction Cares** 2532 W Warren Chicago, IL 60612 312-989-3908 info@communities4construction.com http://www.constructioncare.org/ Maintains list of certified firms: No Provides training for businesses: Yes
Cosmopolitan Chamber of Commerce 1631 S. Michigan Avenue Unit 101 Chicago, IL. 60616 312 971-9594 312 390-2440- Fax cmayes@cosmochamber.org www.cosmochamber.org Maintains list of certified firms: Yes Provides training for businesses: Yes	**Council of Black Architecture and Engineering Companies (Formally NOME)*** 1 South Wacker, Suite 2650 Chicago, IL 60606 312-960-1239 jharris@cbaec.org www.cbaec.org/ Maintains list of certified firms: Yes Provides training for businesses: Yes
Do For Self Community Development Co. * 8659 S. Ingleside Ave., Chicago, IL 60619 773-356-7661 dennismdcchicago@hotmail.com www.doforself.org Maintains list of certified firms: No Provides training for businesses: Yes	**Elite Service Disabled Veteran Owned Business Network** 420 Lake Cook Rd, Ste 104 Deerfield, IL 60015 847-453-8890 john@scifers.net https://scifers.net Maintains list of certified firms: Yes Provides training for businesses: Yes

**Prime Contractors should contact agency with subcontracting opportunities to connect certified firms.*

Far South Community Development Corporation 837 W. 115th Street Chicago, IL 60643 773 831-7107 773 380-0109 crystal@farsouthcdc.org www.farsouthcdc.org Maintains list of certified firms: Yes Provides training for businesses: Yes	**Federation of Women Contractors *** 4210 W. Irving Park Road, Chicago, IL 60641 312-360-1122 info@fwcchicago.com www.fwcchicago.com Maintains list of certified firms: Yes Provides training for businesses: No
Fresh Start Home Community Development Corp. 5168 S. Michigan Avenue, 4N Chicago, IL 60615 773-312-3797 855-270-4175 Info@FreshStartNow.us www.FreshStartNow.us Maintains list of certified firms: Yes Provides training for businesses: Yes	**Greater Southwest Development Corporation** 2601 W. 63rd Street Chicago, IL 60629 773-362-3321 j.moreno@greatersouthwest .org a.soto@greatersouthwest.org www.greatersouthwest.org Maintains list of certified firms: Yes Provides training for businesses: Yes
Hispanic American Construction Industry Association (HACIA) * 650 W. Lake St., Unit 415 Chicago, IL 60661 312-575-0389 312-575-0389 jgomez@haciaworks.org www.haciaworks.org Maintains list of certified firms: Yes Provides training for businesses: Yes	**HIRE360** 2301 S Lake Shore Drive, Lakeside Center Chicago, IL 60616 312 575-2500 info@HIRE360Chicago.com www.HIRE360Chicago.com Maintains list of certified firms: Yes Provides training for businesses: Yes
Illinois Black Chamber of Commerce Corporation 875 N. Michigan Avenue, Suite 3100 Chicago, Illinois 60610 312 794-7765 siri.hibbler@illinoisblackchamberofcommerce.com www.illinoisblackchamberofcommerce.com Maintains list of certified firms: Yes Provides training for businesses: Yes	**Illinois Hispanic Chamber of Commerce *** 222 Merchandise Mart Plaza, Suite 1212 c/o 1871 Chicago, IL 60654 312-425-9500 info@ihccbusiness.net www.ihccbusiness.net Maintains list of certified firms: Yes Provides training for businesses: Yes
Illinois State Black Chamber of Commerce * 411 Hamilton Blvd., Suite 1404 Peoria, Illinois 61602 309-740-4430 309-672-1379 finance@ILBCC.org www.ilbcc.org Maintains list of certified firms: Yes Provides training for businesses: Yes	**JLM Business Development Center*** 2622 W. Jackson Boulevard Chicago, IL 60612 773-826-3064 773-359-4021 Fax lady930@prodigy.net www.jlmcenter.org Maintains list of certified firms: Yes Provides training for businesses: Yes
Lester and Rosalie Anixter Center 6610 N. Clark Street Chicago, IL 60626-4062 773-973-7900 773-274-3523 DDonohueChase@anixter.org www.anixter.org Maintains list of certified firms: No Provides training for businesses: Yes	**LGBT Chamber of Commerce of Illinois *** 3179 N. Clark St., 2nd Floor Chicago, IL 60657 773-303-0167 773-303-0168 admin@lgbtcc.com www.lgbtcc.com Maintains list of certified firms: Yes Provides training for businesses: Yes

**Prime Contractors should contact agency with subcontracting opportunities to connect certified firms.*

National Black Wall Street NPF * 4655 South King Drive, Suite #203 Chicago, IL 60653-4156 773 268-6900 312.276.4781 (Fax) nationalblackwallstreetchicago.org Info@nationalblackwallstreetchicago.org Maintains list of certified firms: Yes Provides training for businesses: Yes	**Native American Chamber of Commerce of Illinois** 100 N. Riverside Plaza, Suite 1670 Chicago, IL 60606 630-926-1700 info@nacc-il.org www.nacc-il.org Maintains list of certified firms: Yes Provides training for businesses: Yes
NDIGO Foundation 329 W. 18th Street, Ste 613 Chicago, IL 60616 312-264-6272 hhartman@ndigo.com www.ndigo.com Maintains list of certified firms: No Provides training for businesses: Yes	**Rainbow/PUSH Coalition *** 930 E. 50th Street Chicago, IL 60615 773-255-9067 773-256-2768 jmitchell@rainbowpush.org www.rainbowpush.org Maintains list of certified firms: Yes Provides training for businesses: Yes
Revolution Workshop 3410 w. Lake Street Chicago, IL 60624 773-934-3014 mrodriguez@revolutionworkshop.org www.revolutionworkshop.org Maintains list of certified firms: Provides training for businesses: Yes	**South Shore Chamber, Inc. *** 1750 E. 71st Street Chicago, IL 60649-2000 773-955- 9508 773-955-9554 info@southshorechamberinc.org www.southshorechamberinc.org Maintains list of certified firms: Yes Provides training for businesses: Yes
Sustainable Options for Urban Living, Inc. (SOUL) 11603 S. Throop Street Chicago, IL 60643 773-250-1770 Ext 702 773 250-1770 Cyndi@soul-program.com www.soul-program.com Maintains list of certified firms: Yes Provides training for businesses: Yes	**RTW Veteran Center *** 7415 E. End, Suite 120 Chicago, IL 60649 800-974-2808 866-873-2494 Fax rtwvetcenter@yahoo.com www.rtwvetcenter.org Maintains list of certified firms: Yes Provides training for businesses: Yes
The Monroe Foundation 1547 South Wolf Road Hillside, Illinois 60162 773-315-9720 omonroe@themonroefoundation.org www.themonroefoundation.org Maintains list of certified firms: No Provides training for businesses: Yes	**Turn 2 Growth** 15475 S. Park South Holland, IL 60473 708-913-4700 info@turn2growth.org www.turn2growth.org Maintains list of certified firms: Yes Provides training for businesses: Yes
US Minority Contractors Association, Inc. * 1250 S. Grove Ave. Suite 200 Barrington, IL 60010 847-852-5010 847-382-1787 larry.bullock@usminoritycontractors.org admin@usminoritycontractors.org www.USMinorityContractors.org Maintains list of certified firms: Yes Provides training for businesses: Yes	**Women's Business Development Center *** 8 S. Michigan Ave., Suite 400 Chicago, IL 60603 312-853-3477x220 312-853-0145 edimenco@wbdc.org www.wbdc.org Maintains list of certified firms: Yes Provides training for businesses: Yes

*****_Prime Contractors should contact agency with subcontracting opportunities to connect certified firms._

Women Construction Owners & Executives (WCOE) * Chicago Caucus 308 Circle Avenue Forest Park, IL 60130 708-366-1250 mkm@mkmservices.com www.wcoeusa.org Maintains list of certified firms: Yes Provides training for businesses: No	

**Prime Contractors should contact agency with subcontracting opportunities to connect certified firms.*

Attachment B - Sample Format for Requesting Assist Agency Comments on Bidder's Request for Reduction or Waiver of MBE/WBE Goals

On Bidder/Proposer's Letterhead – SEND TO THE ASSIST AGENCIES – DO NOT SEND TO THE CITY

RETURN RECEIPT REQUESTED

(Date)

Specification No.: 1219096
Project Description: Portable Vehicle Impact Devices

(Assist Agency Name and Address – **SEND TO THE ASSIST AGENCIES – DO NOT SEND TO THE CITY**)

Dear _____:

_____ (Bidder/Proposer) intends to submit a bid/proposal in response to the above referenced specification with the City of Chicago. Bids are due _____advertised specification with the City of Chicago.

The following areas have been identified for subcontracting opportunities on both a direct and indirect basis:

_____

_____

_____

Our efforts to identify potential subcontractors have not been successful in order to meet the Disadvantaged/ Minority/Women Business Enterprise contract goal. **Due to the inability to identify an appropriate DBE/MBE/WBE firm certified by the City of Chicago to participate as a subcontractor or joint venture partner, a request for the waiver of the contract goals will be submitted.** If you are aware of such a firm, please contact

_____

Name of Company Representative at Address/Phone

within (10) ten business days of receipt of this letter.

Under the City of Chicago's MBE/WBE/DBE Ordinance, your agency is entitled to comment upon this waiver request to the City of Chicago. Written comments may be directed within ten (10) working days of your receipt of this letter to:

Jacquelyn Charleston, Deputy Procurement Officer
Department of Procurement Services
City of Chicago
121 North La Salle Street, Room 806
Chicago, Illinois 60602

If you wish to discuss this matter, please contact the undersigned at _____.

Sincerely,

Schedule B – Affidavit of Joint Venture

SCHEDULE B: Affidavit of Joint Venture (MBE/WBE)

This form need not be submitted if all joint venturers are MBEs and/or WBEs. In such a case, however, a written joint venture agreement among the MBE and WBE venturers must be submitted. In all proposed joint ventures, each MBE and/or WBE venturer must submit a copy of their current Letter of Certification.

All Information Requested by this Schedule must Be Answered in the Spaces Provided. Do Not Refer to Your Joint Venture Agreement Except to Expand on Answers Provided on this Form. If Additional Space Is Required, Additional Sheets May Be Attached.

I. Name of joint venture: _____
Address of joint venture: _____
_____
Phone number of joint venture: _____

II. Identify each non-MBE/WBE venturer(s):
Name of Firm: _____
Address: _____
Phone: _____
Contact person for matters concerning MBE/WBE compliance: _____

III. Identify each MBE/WBE venturer(s):
Name of Firm: _____
Address: _____
Phone: _____
Contact person for matters concerning MBE/WBE compliance: _____

IV. Describe the role(s) of the MBE and/or WBE venturer(s) in the joint venture: _____
_____
_____
_____

V. Attach a copy of the joint venture agreement. In order to demonstrate the MBE and/or WBE venturer's share in the ownership, control, management responsibilities, risks and profits of the joint venture, the proposed joint venture agreement must include specific details related to: (1) the contributions of capital and equipment; (2) work items to be performed by the MBE/WBE's own forces; (3) work items to be performed under the supervision of the MBE/WBE venturer; and (4) the commitment of management, supervisory and operative personnel employed by the MBE/WBE to be dedicated to the performance of the project.

VI. Ownership of the Joint Venture.
A. What are the percentage(s) of MBE/WBE ownership of the joint venture?
MBE/WBE ownership percentage(s) _____
Non-MBE/WBE ownership percentage(s) _____

B. Specify MBE/WBE percentages for each of the following (provide narrative descriptions and other detail as applicable):

1. Profit and loss sharing: _____

2. Capital contributions:
(a) Dollar amounts of initial contribution: _____

Schedule B: Affidavit of Joint Venture (MBE/WBE)

(b) Dollar amounts of anticipated on-going contributions:_____

3. Contributions of equipment (Specify types, quality and quantities of equipment to be provided by each venturer):_____

4. Other applicable ownership interests, including ownership options or other agreements which restrict or limit ownership and/or control:_____

5. Provide copies of all written agreements between venturers concerning this project.

6. Identify each current City of Chicago contract (and each contract completed during the past two (2) years) by a joint venture of two or more firms participating in this joint venture:

VII. Control of and Participation in the Joint Venture. Identify by name and firm those individuals who are, or will be, responsible for, and have the authority to engage in the following management functions and policy decisions. (Indicate any limitations to their authority such as dollar limits and co-signatory requirements.):

A. Joint venture check signing:

B. Authority to enter contracts on behalf of the joint venture:

C. Signing, co-signing and/or collateralizing loans:

D. Acquisition of lines of credit:

Schedule B: Affidavit of Joint Venture (MBE/WBE)

E. Acquisition and indemnification of payment and performance bonds:

F. Negotiating and signing labor agreements:

G. Management of contract performance. (Identify by name and firm only):

1. Supervision of field operations:
2. Major purchases:
3. Estimating:
4. Engineering:

VIII. Financial Controls of joint venture:

A. Which firm and/or individual will be responsible for keeping the books of account?

B. Identify the managing partner, if any, and describe the means and measure of their compensation:

C. What authority does each venturer have to commit or obligate the other to insurance and bonding companies, financing institutions, suppliers, subcontractors, and/or other parties participating in the performance of this contract or the work of this project?

IX. State the approximate number of operative personnel (by trade) needed to perform the joint venture's work under this contract. Indicate whether they will be employees of the non-MBE/WBE firm, the MBE/WBE firm, or the joint venture.

Schedule B: Affidavit of Joint Venture (MBE/WBE)

Trade	Non-MBE/WBE Firm (Number)	MBE/WBE (Number)	Joint Venture (Number)

If any personnel proposed for this project will be employees of the joint venture:

A. Are any proposed joint venture employees currently employed by either venturer?
Currently employed by non-MBE/WBE (number) ____ Employed by MBE/WBE ____

B. Identify by name and firm the individual who will be responsible for hiring joint venture employees:
_____

C. Which venturer will be responsible for the preparation of joint venture payrolls:
_____

X. Please state any material facts of additional information pertinent to the control and structure of this joint venture.

_____
_____
_____
_____
_____
_____
_____
_____
_____
_____
_____
_____
_____
_____
_____
_____
_____
_____

Schedule B: Affidavit of Joint Venture (MBE/WBE)

The undersigned affirms that the foregoing statements are correct and include all material information necessary to identify and explain the terms and operations of our joint venture and the intended participation of each venturer in the undertaking. Further, the undersigned covenant and agree to provide to the City current, complete and accurate information regarding actual joint venture work and the payment therefore, and any proposed changes in any provision of the joint venture agreement, and to permit the audit and examination of the books, records and files of the joint venture, or those of each venturer relevant to the joint venture by authorized representatives of the City or the Federal funding agency.

Any material misrepresentation will be grounds for terminating any contract which may be awarded and for initiating action under federal or state laws concerning false statements.

Note: If, after filing this Schedule B and before the completion on the joint venture's work on the project, there is any change in the information submitted, the joint venture must inform the City of Chicago, either directly or through the prime contractor if the joint venture is a subcontractor.

Name of MBE/WBE Partner Firm	Name of Non-MBE/WBE Partner Firm
Signature of Affiant	Signature of Affiant
Name and Title of Affiant	Name and Title of Affiant
Date	Date

On this _____ day of _____ , 20 ___ , the above-signed officers

_____,
(names of affiants)

personally appeared and, known to me be the persons described in the foregoing Affidavit, acknowledged that they executed the same in the capacity therein stated and for the purpose therein contained.

IN WITNESS WHEREOF, I hereunto set my hand and official seal.

_____
Signature of Notary Public

My Commission Expires: _____

(SEAL)

Schedule C-1: Letter of Intent From MBE/WBE To Perform As Subcontractor, Supplier and/or Consultant

FOR NON-CONSTRUCTION PROJECTS ONLY

SCHEDULE C-1

MBE/WBE Letter of Intent to Perform as a Subcontractor, Supplier, or Consultant

Project Name:_____ Specification No.:_____

From:_____
(Name of MBE/WBE Firm)

To:_____and the City of Chicago.
(Name of Prime Contractor)

The MBE or WBE status of the undersigned is confirmed by the attached City of Chicago or Cook County, Illinois Certification Letter. 100% MBE or WBE participation is credited for the use of a MBE or WBE "manufacturer." 60% participation is credited for the use of a MBE or WBE "regular dealer."

The undersigned is prepared to perform the following services in connection with the above-named project/contract. If more space is required to fully describe the MBE or WBE proposed scope of work and/or payment schedule, including a description of the commercially useful function being performed. Attach additional sheets as necessary:

_____
_____
_____

The above described performance is offered for the following price and described terms of payment:

_____
_____
_____

The undersigned will enter into a formal written agreement for the above work with you as a Prime Contractor, conditioned upon your execution of a contract with the City of Chicago, within three (3) business days of your receipt of a signed contract from the City of Chicago.

SUB-SUBCONTRACTING LEVELS
A zero (0) must be shown in each blank if the MBE or WBE will not be subcontracting any of the work listed or attached to this schedule.

_____ % of the dollar value of the MBE or WBE subcontract that will be subcontracted to non MBE/WBE contractors.

_____ % of the dollar value of the MBE or WBE subcontract that will be subcontracted to MBE or WBE contractors.

NOTICE: **If any of the MBE or WBE scope of work will be subcontracted, list the name of the vendor and attach a brief explanation, description and pay item number of the work that will be subcontracted. MBE/WBE credit will not be given for work subcontracted to Non-MBE/WBE contractors, except for as allowed in the Special Conditions Regarding Minority Business Enterprise Commitment and Women Business Enterprise Commitment.**

One or more owners or principals of the Prime Contractor ( ) does / ( ) does not have an ownership interest in the undersigned. Provide names of such individuals and their respective ownership percentages, or indicate "none." Attach additional sheets if necessary: _____

The undersigned has entered into a formal written mentor protégé agreement as a subcontractor/protégé with you as a Prime Contractor/mentor: ( ) Yes ( ) No

NOTICE: **THIS SCHEDULE AND ATTACHMENTS REQUIRE ORIGINAL SIGNATURES.**

_____
(Signature of President/Owner/CEO or Authorized Agent of MBE/WBE) (Date)

_____
(Name/Title-Please Print)

_____
(Email & Phone Number)

03/2019 Page 1 of 1

Schedule D-1: Affidavit of Implementation of MBE/WBE Goals and Participation Plan

SCHEDULE D-1
Compliance Plan Regarding MBE/WBE Utilization
Affidavit of Prime Contractor

FOR NON-CONSTRUCTION PROJECTS ONLY

MUST BE SUBMITTED WITH THE BID. FAILURE TO SUBMIT THE SCHEDULE D-1 WILL CAUSE THE BID TO BE REJECTED. DUPLICATE AS NEEDED.

Project Name:_____

Specification No.:_____

In connection with the above captioned contract, I HEREBY DECLARE AND AFFIRM that I am a duly authorized representative of _____.
(Name of Prime Consultant/Contractor)

and that I have personally reviewed the material and facts set forth herein describing our proposed plan to achieve the MBE/WBE goals of this contract.

All MBE/WBE firms included in this plan have been certified as such by the City of Chicago and/or Cook County, Illinois (Letters of Certification Attached).

I. Direct Participation of MBE/WBE Firms:

NOTE: The bidder/proposer shall, in determining the manner of MBE/WBE participation, first consider involvement with MBE/WBE firms as joint venture partners, subcontractors, and suppliers of goods and services directly related to the performance of this contract.

A. If bidder/proposer is a joint venture and one or more joint venture partners are certified MBEs or WBEs, attach copies of Letters of Certification, Schedule B form and a copy of Joint Venture Agreement clearly describing the role of each MBE/WBE firm(s) and its ownership interest in the joint venture.

B. Complete this section for each MBE/WBE Subcontractor/Supplier/Consultant participating on this contract:

1. Name of MBE/WBE:_____

Address:_____

Contact Person:_____

Phone Number:_____

Dollar Value of Participation $_____

Percentage of Participation % _____

Mentor Protégé Agreement (attach executed copy): ( ) Yes ( ) No Add'l Percentage Claimed:[1] ____%

Total Participation % _____

2. Name of MBE/WBE:_____

Address:_____

Contact Person:_____

[1] The Prime Contractor may claim an additional 0.5 percent participation credit (up to a maximum of five (5) percent) for every one (1) percent of the value of the contract performed by the MBE/WBE protégé firm.

Schedule D-1: Prime Contractor Affidavit-MBE/WBE Compliance Plan

Phone Number:_____

Dollar Value of Participation $_____

Percentage of Participation % _____

Mentor Protégé Agreement (attach executed copy): ( ) Yes ( ) No Add'l Percentage Claimed: ____%

Total Participation % _____

3. Name of MBE/WBE:_____

Address:_____

Contact Person:_____

Phone Number:_____

Dollar Value of Participation $_____

Percentage of Participation % _____

Mentor Protégé Agreement (attach executed copy): ( ) Yes ( ) No Add'l Percentage Claimed: ____%

Total Participation % _____

4. Name of MBE/WBE:_____

Address:_____

Contact Person:_____

Phone Number:_____

Dollar Value of Participation $_____

Percentage of Participation % _____

Mentor Protégé Agreement (attach executed copy): ( ) Yes ( ) No Add'l Percentage Claimed: ____%

Total Participation % _____

5. Attach Additional Sheets as Needed

II. Indirect Participation of MBE/WBE Firms

NOTE: This section need not be completed if the MBE/WBE goals have been met through the direct participation outlined in Section I. If the MBE/WBE goals have not been met through direct participation, Contractor is required to demonstrate Good Faith Efforts pursuant to the MBE/WBE Special Conditions in a request for a waiver or reduction of MBE/WBE goals. Indirect participation may be considered as part of such Good Faith Efforts in support of the requested waiver or reduction.

MBE/WBE Subcontractors/Suppliers/Consultants proposed to perform work or supply goods or services where such performance does not directly relate to the performance of this contract:

1. Name of MBE/WBE:_____

Address:_____

Contact Person:_____

Schedule D-1: Prime Contractor Affidavit-MBE/WBE Compliance Plan

Phone Number:_____

Dollar Value of Participation $_____

Percentage of Participation % _____

Mentor Protégé Agreement (attach executed copy): ( ) Yes ( ) No Add'l Percentage Claimed: ____%

Total Participation % _____

2. Name of MBE/WBE:_____

Address:_____

Contact Person:_____

Phone Number:_____

Dollar Value of Participation $_____

Percentage of Participation % _____

Mentor Protégé Agreement (attach executed copy): ( ) Yes ( ) No Add'l Percentage Claimed: ____%

Total Participation % _____

3. Name of MBE/WBE:_____

Address:_____

Contact Person:_____

Phone Number:_____

Dollar Value of Participation $_____

Percentage of Participation % _____

Mentor Protégé Agreement (attach executed copy): ( ) Yes ( ) No Add'l Percentage Claimed: ____%

Total Participation % _____

4. Name of MBE/WBE:_____

Address:_____

Contact Person:_____

Phone Number:_____

Dollar Value of Participation $_____

Percentage of Participation % _____

Mentor Protégé Agreement (attach executed copy): ( ) Yes ( ) No Add'l Percentage Claimed: ____%

Total Participation % _____

5. Attach Additional Sheets as Needed

Schedule D-1: Prime Contractor Affidavit-MBE/WBE Compliance Plan

III. Summary of MBE/WBE Proposal

A. MBE Proposal **(Direct & Indirect)**

1. MBE Direct Participation

MBE Firm Name	Dollar Amount Participation ($)	Percent Amount Participation (%)
Total Direct MBE Participation		

2. MBE Indirect Participation

MBE Firm Name	Dollar Amount Participation ($)	Percent Amount Participation (%)
Total Indirect MBE Participation		

B. WBE Proposal **(Direct & Indirect)**

1. WBE Direct Participation

WBE Firm Name	Dollar Amount Participation ($)	Percent Amount Participation (%)
Total Direct WBE Participation		

2. WBE Indirect Participation

WBE Firm Name	Dollar Amount Participation ($)	Percent Amount Participation (%)
Total Indirect WBE Participation		

Schedule D-1: Prime Contractor Affidavit-MBE/WBE Compliance Plan

The Prime Contractor designates the following person as its MBE/WBE Liaison Officer:

_____

(Name- Please Print or Type) (Phone)

One or more owners or principals of the Prime Contractor ( ) does / ( ) does not have an ownership interest in any MBE or WBE listed in this Schedule D. Provide names of such individuals and their respective ownership percentages, and identify the MBE/WBE firms in which such ownership is held, or indicate "none." Add additional sheets if necessary:

_____

_____

I DO SOLEMNLY DECLARE AND AFFIRM UNDER PENALTIES OF PERJURY THAT THE CONTENTS OF THE FOREGOING DOCUMENT ARE TRUE AND CORRECT, THAT NO MATERIAL FACTS HAVE BEEN OMITTED, AND THAT I AM AUTHORIZED ON BEHALF OF THE PRIME CONTRACTOR TO MAKE THIS AFFIDAVIT.

_____
(Name of Prime Contractor – Print or Type)

State of:_____

_____
(Signature)

County of:_____

_____
(Name/Title of Affiant – Print or Type)

_____
(Date)

On this_____day of_____, 20____, the above signed officer _____
(Name of Affiant)

personally appeared and, known by me to be the person described in the foregoing Affidavit, acknowledged that (s)he executed the same in the capacity stated therein and for the purposes therein contained.

IN WITNESS WHEREOF, I hereunto set my hand and seal.

_____
(Notary Public Signature)

SEAL:

Commission Expires:_____

ARTICLE 7. INSURANCE REQUIREMENTS

The Contractor must provide and maintain at Contractor's own expense, during the term of the Contract and during the period following expiration if Contractor is required to return and perform any work, services or operations, the insurance coverages and requirements specified below, insuring all work, services, or operations related to the Contract.

7.1. Insurance to be Provided

7.1.1. Workers Compensation and Employers Liability (Primary and Umbrella)

Workers Compensation Insurance, as prescribed by applicable law covering all employees who are to provide a service under this Contract and Employers Liability coverage with limits of not less than $1,000,000 each accident; $1,000,000 disease-policy limit; and $1,000,000 disease-each employee, or the full per occurrence limits of the policy, whichever is greater.

Contractor may use a combination of primary and excess/umbrella policy/policies to satisfy the limits of liability required herein. The excess/umbrella policy/policies must provide the same coverages/follow form as the underlying policy/policies.

7.1.2. Commercial General Liability (Primary and Umbrella)

Commercial General Liability Insurance or equivalent must be maintained with limits of not less than $1,000,000 per occurrence or for the full per occurrence limits of the policy, whichever is greater, for bodily injury, personal injury, and property damage liability. Coverages must include the following: All premises and operations, products/completed operations, separation of insureds, defense, and contractual liability (not to include Endorsement CG 21 39 or equivalent).

The City must be provided additional insured status with respect to liability arising out of Contractor's work, services or operations and completed operations performed on behalf of the City. The City's additional insured status must apply to liability and defense of suits arising out of Contractor's acts or omissions, whether such liability is attributable to the Contractor or to the City on an additional insured endorsement form acceptable to the City. The full policy limits and scope of protection also will apply to the City as an additional insured, even if they exceed the City's minimum limits required herein. Consultant's liability insurance must be primary without right of contribution by any other insurance or self-insurance maintained by or available to the City.

Contractor may use a combination of primary and excess/umbrella policy/policies to satisfy the limits of liability required herein. The excess/umbrella policy/policies must provide the same coverages/follow form as the underlying policy/policies.

7.1.3. Automobile Liability (Primary and Umbrella)

When any motor vehicles (owned, non-owned and hired) are used in connection with work, services or operations to be performed, the Contractor must maintain Automobile Liability Insurance with limits of not less than $1,000,000 per occurrence, or for the full per occurrence limits of the policy, whichever is greater for bodily injury and property damage. Coverage must include but not be limited to the following: ownership, maintenance, or use of any auto whether owned, leased, non-owned or hired used in the performance of the work, both on and off the City sites including loading and unloading.

The City is to be added as an additional insured on a primary, non-contributory basis.

Contractor may use a combination of primary and excess/umbrella policy/policies to satisfy the limits of liability required herein. The excess/umbrella policy/policies must provide the same coverages/follow form as the underlying policy/policies.

7.1.4. Excess/Umbrella

Excess/Umbrella Liability Insurance must be maintained with limits of not less than $4,000,000 per occurrence, or the full per occurrence limits of the policy, whichever is greater. The policy/policies must provide the same coverages/follow form as the underlying Commercial General Liability, Automobile Liability, Employers Liability and Completed Operations

coverage required herein and expressly provide that the excess or umbrella policy/policies will drop down over reduced and/or exhausted aggregate limit, if any, of the underlying insurance. The Excess/Umbrella policy/policies must be primary without right of contribution by any other insurance or self-insurance maintained by or available to the City.

Contractor may use a combination of primary and excess/umbrella policies to satisfy the limits of liability required in sections 7.1.1, 7.1.2, 7.1.3 and 7.1.4 herein.

7.1.5. Property

The Contractor is to provide evidence of All Risk Property Insurance to insure against loss or damage to Contactor's repair shop/service facility that is part of the Contract. Coverage is to include the City of Chicago property at replacement cost including barrier and bollard materials, parts and supplies while in the care, custody and control of Contractor during repairs.

Contractor is responsible for all loss or damage to personal property (including but not limited to materials, equipment, tools and supplies) owned, rented or used by Contractor.

7.2. Additional Requirements

7.2.1. Evidence of Insurance.

Contractor must furnish the City, Chicago Department of Procurement Services, 121 N. LaSalle Street, Room 806, Chicago, IL 60602, original certificates of insurance and additional insured endorsement, or other evidence of insurance, to be in force on the date of this Contract, and renewal certificates of Insurance and endorsement, or such similar evidence, if the coverages have an expiration or renewal date occurring during the term of this Contract. Contractor must submit evidence of insurance prior to execution of Contract. The receipt of any certificate does not constitute Contract by the City that the insurance requirements in the Contract have been fully met or that the insurance policies indicated on the certificate are in compliance with all requirements of Contract. The failure of the City to obtain, nor the City's receipt of, or failure to object to a non-complying insurance certificate, endorsement or other insurance evidence from Contractor, its insurance broker(s) and/or insurer(s) will not be construed as a waiver by the City of any of the required insurance provisions. Contractor must advise all insurers of the Contract provisions regarding insurance. The City in no way warrants that the insurance required herein is sufficient to protect Contractor for liabilities which may arise from or relate to the Contract. The City reserves the right to obtain complete, certified copies of any required insurance policies at any time.

7.2.2. Failure to Maintain Insurance.

Failure of the Contractor to comply with required coverage and terms and conditions outlined herein will not limit Contractor's liability or responsibility nor does it relieve Contractor of the obligation to provide insurance as specified in this Contract. Nonfulfillment of the insurance conditions may constitute a violation of the Contract, and the City retains the right to suspend this Contract until proper evidence of insurance is provided, or the Contract may be terminated.

7.2.3. Notice of Material Change, Cancellation or Non-Renewal.

Contractor must provide for sixty (60) days prior written notice to be given to the City in the event coverage is substantially changed, canceled or non-renewed and ten (10) days prior written notice for non-payment of premium.

7.2.4. Deductibles and Self-Insured Retentions.

Any deductibles or self-insured retentions on referenced insurance coverages must be borne by Contractor.

7.2.5. Waiver of Subrogation.

Contractor hereby waives its rights and its insurer(s)' rights of and agrees to require their insurers to waive their rights of subrogation against the City under all required insurance herein for any loss arising from or relating to this Contract. Contractor agrees to obtain any endorsement that may be necessary to affect this waiver of subrogation, but this provision applies regardless of whether or not the City received a waiver of subrogation endorsement for Contractor's insurer(s).

7.2.6. Contractors Insurance Primary.

All insurance required of Contractor under this Contract shall be endorsed to state that Contractor's insurance policy is primary and not contributory with any insurance carrier by the City.

7.2.7. No Limitation as to Contractor's Liabilities.
The coverages and limits furnished by Contractor in no way limit the Contractor's liabilities and responsibilities specified within the Contract or by law.

7.2.8. No Contribution by City.
Any insurance or self-insurance programs maintained by the City do not contribute with insurance provided by Contractor under this Contract.

7.2.9. Insurance not Limited by Indemnification.
The required insurance to be carried is not limited by any limitations expressed in the indemnification language in this Contract or any limitation placed on the indemnity in this Contract given as a matter of law.

7.2.10. Insurance and Limits Maintained.
If Contractor maintains higher limits and/or broader coverage than the minimums shown herein, the City requires and shall be entitled the higher limits and/or broader coverage maintained by Contractor. Any available insurance proceeds in excess of the specified minimum limits of insurance and coverage shall be available to the City.

7.2.11. Joint Venture or Limited Liability Company.
If Contractor is a joint venture or limited liability company, the insurance policies must name the joint venture or limited liability company as a named insured.

7.2.12. Other Insurance obtained by Contractor.
If Contractor desires additional coverages, the Contractor will be responsible for the acquisition and cost.

7.2.13. Insurance required of Subcontractors.
Contractor shall name the Subcontractor(s) as a named insured(s) under Contractor's insurance or Contractor will require each Subcontractor(s) to provide and maintain Commercial General Liability, Commercial Automobile Liability, Worker's Compensation and Employers Liability Insurance and when applicable Excess/Umbrella Liability Insurance with coverage at least as broad as in outlined in Section A, Insurance Required. The limits of coverage will be determined by Contractor. Contractor shall determine if Subcontractor(s) must also provide any additional coverage or other coverage outlined in Section A, Insurance Required. Contractor is responsible for ensuring that each Subcontractor has named the City as an additional insured where required and name the City as an additional

insured on an additional insured endorsement form acceptable to the City. Contractor is also responsible for ensuring that each Subcontractor has complied with the required coverage and terms and conditions outlined in this Section B, Additional Requirements. When requested by the City, Contractor must provide to the City certificates of insurance and additional insured endorsements or other evidence of insurance. The City reserves the right to obtain complete, certified copies of any required insurance policies at any time. Failure of the Subcontractor(s) to comply with required coverage and terms and conditions outlined herein will not limit Contractor's liability or responsibility

7.2.14. City's Right to Modify.

Notwithstanding any provisions in the Contract to the contrary, the City, Department of Finance, Risk Management Office maintains the right to modify, delete, alter or change these requirements.

ARTICLE 8. ECONOMIC DISCLOSURE STATEMENT AND AFFIDAVIT (EDS)

8.1. Online EDS Filing Required Prior To Bid Opening

The Bidder must prepare an online EDS prior to the bid opening date.

A BIDDER THAT DOES NOT PREPARE AN ELECTRONIC EDS PRIOR TO THE BID OPENING WILL BE FOUND NON-RESPONSIVE AND ITS BID WILL BE REJECTED.

NOTE:

A. Filing an "EDS Information Update" does NOT satisfy the requirement to file an electronic EDS prior to bid opening.

B. Filing an EDS in a hard copy or paper copy form does NOT satisfy the requirement to file an electronic EDS prior to bid opening.

C. Filing an EDS for another mater (different bid, contract, etc.) does NOT satisfy the requirement to file an electronic EDS prior to bid opening.

D. When completing the online EDS, please choose the Department of Procurement Services as the City agency or department that is requesting the EDS.

8.2. Online EDS Web Link

The web link for the Online EDS is https://webapps.cityofchicago.org/EDSWeb

8.3. Online EDS Number

Upon completion of the online EDS submission process, the Bidder will be provided an EDS number. Bidders should provide this number here:

EDS Number: _____

8.4. Online EDS Certification of Filing

Upon completion of the online submission process, the Bidder will be able to print a hard copy Certificate of Filing. The Bidder should submit the signed Certificate of Filing with its bid.

Please insert your Certification of Filing following this page.

A Bidder that does not include a signed Certificate of Filing with its bid must provide it upon the request of the Chief Procurement Officer.

8.5. Preparation Checklist for Registration

To expedite and ease your registration process, we recommend that you collect the following information prior to registering for an Online EDS user account:

_____1. Invitation number, if you were provided an invitation number.

_____2. EDS document from previous years, if available.

_____ 3. Email address to correspond with the Online EDS system.

4. Company Information:

_____ a. Legal Name

_____b. FEIN/SSN

_____c. City of Chicago Vendor Number, if available.

_____d. Address and phone number information that you would like to appear on your EDS documents.

_____e. EDS Captain. Check for an EDS Captain in your company - this maybe the person that usually submits EDS for your company or the first person that registers for your company.

8.6. Preparation Checklist for EDS Submission

To expedite and ease your EDS submission, we recommend that you collect the following information prior to updating your EDS information online.

Items #1 through #7 are needed for both EDS information updates and contract related EDS documents:

_____1. Invitation number, if you were provided with an invitation number.

_____2. Site address that is specific to this EDS.

_____3. Contact that is responsible for this EDS.

_____4. EDS document from previous years, if available.

_____ 5. Ownership structure and if applicable, owners' company information:

_____ a. % of ownership

_____b. Legal Name

_____c. FEIN/SSN

_____d. City of Chicago Vendor Number, if available.

_____e. Address

_____6. List of directors, officers, titleholders, etc. (if applicable).

_____7. For partnerships/LLC/LLP/Joint ventures, etc.; List of controlling parties (if applicable).

Items #8 and #9 are needed ONLY for contract related EDS documents:

1. Contract related information (if applicable):

_____a. City of Chicago contract package

_____b. Cover page of City of Chicago bid/solicitation package

_____c. If EDS is related to a mod, then cover page of your current contract with the City.

2. List of subcontractors and retained parties:

_____a. Name

_____b. Address

_____c. Fees – Estimated or paid

8.7. EDS Frequently Asked Questions

Q: Where do I file?

A: The web link for the Online EDS is https://webapps.cityofchicago.org/EDSWeb

Q: How do I get help?

A: If there is a question mark on a page or next to a field, click on the question mark for help filling out the page or field. You may also consult the User Manual and the Training Videos available on the left menu.

Q: Why do I have to submit an EDS?

A: The Economic Disclosure Statement (EDS) is required of applicants making an application to the City for action requiring City Council, City department or other City agency approval. For example, all bidders seeking a City contract are required to submit an EDS. Through the EDS, applicants make disclosures required by State law and City ordinances and certify compliance with various laws and ordinances. An EDS is also required of certain parties related to the applicant, such as owners and controlling parties.

Q: Who is the Applicant?

A: "Applicant" means any entity or person making an application to the City for action requiring City Council or other City agency approval. The applicant does not include owners and parent companies.

Q: Who is the Disclosing Party?

A: "Disclosing Party" means any entity or person submitting an EDS. This includes owners and parent companies.

Q: What is an entity or legal entity?

A: "Entity' or 'Legal Entity" means a legal entity (for example, a corporation, partnership, joint venture, limited liability company or trust).

Q: What is a person for purposes of the EDS?

A: "Person" means a human being.

Q: Who must submit an EDS?

A. An EDS must be submitted in any of the following three circumstances:

Applicants: An Applicant must always file this EDS. If the Applicant is a legal entity, state the full name of that legal entity. If the Applicant is a person acting on his/her own behalf, state his/her name.

Entities holding an interest: Whenever a legal entity has a beneficial interest (E. G. direct or indirect ownership) of more than 7.5% in the Applicant, each such legal entity must file an EDS on its own behalf.

Controlling entities: Whenever a Disclosing Party is a general partnership, limited partnership, limited liability company, limited liability partnership or joint venture that has a general partner, managing member, manager or other entity that can control the day-to-day management of the Disclosing Party, that entity must also file an EDS on its own behalf. Each entity with a beneficial interest of more than 7.5% in the controlling entity must also file an EDS on its own behalf.

Q: What information is needed to submit an EDS?

A: The information contained in the Preparation Checklist for EDS submission.

Q: I don't have a user ID & password. Can I still submit an Online EDS?

A: No. You must register and create a user ID and password before submitting an Online EDS.

Q: What information is needed to request a user ID & password for Online EDS?

A: The information contained in the Preparation Checklist for Registration is needed to request a login for the Online EDS.

Q: I already have a username and password from another City web site (City Web Portal, Department of Construction and Permits, Department of Consumer Services, etc.). Can I log-in the Online EDS with that account?

A: Usually not. The Online EDS uses a user ID and password system that is shared by the Public Vehicle Advertising and Water Payment web sites. You may use a username and password from those sites by answering "Yes" to "Is this an existing City of Chicago user ID?" when registering. Other usernames and passwords will not be automatically recognized. However, you may choose to create an identical username for the Online EDS if it is not already taken.

Q: I don't have an email address. How do I submit an Online EDS?

A: You cannot get an account to submit an online EDS without an email address. If you need an e-mail address, we suggest that you use a free internet email provider such as www.hotmail.com, www.yahoo.com or rnail.google.com to open an account. The City does not endorse any particular free internet email provider. Public computers are available at all Chicago Public Library branches.

Q: I forgot my user ID. Can I register again?

A: No. If you are the EDS Captain of your organization, please contact the Department of Procurement Services at 312-744-4900. If you are an EDS team member, contact your EDS Captain, who can look up your user ID.

Q: Who is the EDS Captain?

A: The EDS Captain is a person who performs certain administrative functions for an organization which files an EDS. Each organization registered with the Online EDS has at least one EDS Captain. There may be co-captains, who are all equal. EDS Captains approve new users, change contact information for an organization and de-active accounts of employees who have left the organization. Please see the User Manual for more information.

Q: Why do we need EDS Captains?

A: The Online EDS is designed to be a self-service web application which allows those doing or seeking to do business with the City to perform as many routine functions as possible without City intervention. Because many organizations have multiple staff filing an EDS, the EDS Captain role allows those organizations to self-manage the contact information and users.

Q: Who is the EDS team?

A: The EDS team for an organization is everyone who is registered to file an EDS on behalf of the organization.

Q: I forgot my password. What should I do?

A: To retrieve a temporary password, click the "Forgot your password?" link on the login page. Enter your user ID that you provided when you registered your account. The system will automatically generate a temporary password and send it to you. When you log-in with your temporary password, you will be asked to create a new password.

Q: How do I complete an Online EDS?

A: Click on "Create New" after logging in. The Online EDS system will walk you through the EDS questions. Please see the User Manual for details.

Q: How do I fill out a Disclosure of Retained Parties?

A: There is no longer a separate Disclosure of Retained Parties filing. After logging in, click on "Create New". Answer (click) "Contract" to "Is this EDS for a contract or an EDS information update?" Click "Fill out EDS" and click on the "Retained Parties" tab. When finished, click on "Ready to Submit".

Q: How do I attach documents?

A: Attachments are discouraged. If at all possible, please provide a concise explanation in the space provided in the online form. Attachments with pages of officers are not acceptable. Names of officers must be typed into the system. If you must provide an attachment for another reason, please send it to your City of Chicago contact (contract administrator or negotiator for procurements) and they will attach it for you. Documents can be sent in PDF (preferred), Word or paper format.

Q: Who can complete an Economic Disclosure Statement online?

A: Any authorized representative of your business with a user ID and password can complete your EDS online. One person, such as an assistant, can fill in the information and save it and another person can review and electronically sign the Online EDS.

Q: What are the benefits of filing my Economic Disclosure statement electronically?

A: Filing electronically reduces the chance of filing an incomplete EDS and speeds up the processing of contract awards. A certificate of filing can be printed at the completion of the process and inserted into your bid package. The biggest benefit for those who frequently do business with the City is that after the first EDS, each EDS is much easier to fill out because non-contract specific information is pre-filled from the last submitted EDS.

Q: Will my information be secure?

A: Yes. When making your internet connection to our Web Server, you will connect through a Secure Socket Layer (SSL for short) to the "Online EDS" login page. All information you type will be protected using strong encryption. Within the login page,

you will provide us with a user ID, password and secret question for user authentication, only you will have knowledge of this unique identification information.

Q: I am filing electronically. How do I sign my EDS?

A: Once you have completed the EDS, you will be prompted to enter your password and answer to your secret question. Together, these will serve as your electronic signature. Although you will also print and physically sign an EDS certification of filing as a notice that your EDS was filed, your EDS is complete as a legal document with only the electronic filing.

Q: My address has changed. How can I update my information?

A: You must be an EDS Captain for your organization to update this. Log-in and click on "Vendor Admin, Site Administration". Select the appropriate site and click edit.

Q: I have more questions. How can I contact the Department of Procurement Services?

A: Please contact the contract administrator or negotiator assigned to your solicitation or contract. You may call DPS at 312-744-4900 between 8:30 AM and 5:00 PM Central Time.

Q: Can I save a partially complete EDS?

A: Yes. Click "Save". To avoid data loss, we recommend you save your work periodically while filling out your EDS.

Q: Do I have to re-type my information each time I submit an EDS?

A: No. The system will remember non-contract specific information from your last submitted EDS for one year. This information will be filled-in for you in your new EDS. You will have an opportunity to correct it if it has changed since your last filing. When you submit your new EDS, the information is saved and the one-year clock begins running anew.

Q: What are the system requirements to use the Online EDS?

A: The following are minimum requirements to use the Online EDS:

- A PDF viewer such as Adobe Reader is installed and your web browser is configured to display PDFs automatically. You may download and install Adobe Reader free at www.adobe.comlproducts/reader/
- Your web browser is set to permit running of JavaScript.
- Your web browser allows cookies to be set for this site. Please note that while we use cookies in the Online EDS, we do not use them to track personally identifiable information, so your privacy is maintained.
- Your monitor resolution is set to a minimum of 1024 x 768.
- While not required to submit an EDS, if you wish to view the training videos, you must have Adobe Flash Plugin version 9 or higher, speakers and sound. Please note that very old computers may not be able to run Adobe Flash and will not be able to play the training videos. In that case, we encourage you to seek help using the Online EDS Manuals. You may download and install Adobe Flash Plugin free at htty://get.adobe.comiflashplayer

The Online EDS has been tested on Internet Explorer 6.0, 7.0, Firefox 2.0 and 3.0 on Windows XP and Mac OS X. Although it should work on other browsers and operating systems, the City of Chicago cannot guarantee compatibility.

CERTIFICATE OF FILING FOR

CITY OF CHICAGO ECONOMIC DISCLOSURE STATEMENT

EDS Number: 171476
Certificate Printed on: 09/06/2022

Date of This Filing:03/25/2022 03:21 PM
Original Filing Date:03/25/2022 03:21 PM

Disclosing Party: Meridian Rapid Defense Group LLC
Filed by: Karen Ewald

Title:Head of Administration

Matter: 1219096: PORTABLE VEHICLE IMPACT DEVICES
Applicant: Meridian Rapid Defense Group LLC
Specification #: 1219096
Contract #: 201170

The Economic Disclosure Statement referenced above has been electronically filed with the City. Please provide a copy of this Certificate of Filing to your city contact with other required documents pertaining to the Matter. For additional guidance as to when to provide this Certificate and other required documents, please follow instructions provided to you about the Matter or consult with your City contact.

A copy of the EDS may be viewed and printed by visiting https://webapps1.chicago.gov/eds and entering the EDS number into the EDS Search. Prior to contract award, the filing is accessible online only to the disclosing party and the City, but is still subject to the Illinois Freedom of Information Act. The filing is visible online to the public after contract award.

ARTICLE 9. BIDDER CONTACT INFORMATION
Person to contact regarding bid:

Name: Mike Juhala, Regional Sales Director Phone: 1 (503) 688-8565

Address: 177 E Colorado Boulevard, Suite 200, Pasadena, California 91105

Email Address: mjuhala@meridian-barrier.com

9.1. BIDDER QUALIFICATIONS

Bidder must demonstrate sufficient experience and expertise in providing the service of similar scope and magnitude as specified herein. Therefore, upon request of the Chief Procurement Officer or authorized representative, the Bidder must submit, at a minimum, the following information as summarized in Section 5.8 Portable Vehicle Impact Devices.

9.2. REFERENCES/WORK EXPERIENCE

1. COMPANY: City of Jacksonville - Fire and Rescue Department / Emergency Preparedness Division
   ADDRESS: 900 Haines Street, Jacksonville, Florida 32206
   CONTACT: Brian Peterson, Assistant Chief PHONE(904) 510-7953
   EMAIL: brianp@coj.net
   DESCRIPTION OF WORK: Own 126 Archer Barriers and 4 trailers
   DATE(S) WORK PERFORMED: March 2, 2021 DOLLAR VALUE OF WORK: $1,000,000.00

2. COMPANY: City of Pasadena, California (Counter-Terrorism Unit/SWAT/Event Planning section
   ADDRESS: 207 N. Garfield Avenue, Pasadena, California 91101
   CONTACT: Lt. John Mercado PHONE(626) 744-4248
   EMAIL: jmercado@cityofpasadena.net
   DESCRIPTION OF WORK: Own 16 Archer Barriers, 2 trailers, and 2 Archer Beam Gates
   DATE(S) WORK PERFORMED: January 1, 2020 DOLLAR VALUE OF WORK: $920,000.00

3. COMPANY: City of Miami Beach (Investigations and Support Division | Technical Operations Unit)
   ADDRESS: 1100 Washington Avenue, Miami Beach, Florida 33139
   CONTACT: Anthony Loperfido, Police Sergeant PHONE(305) 673-7050
   EMAIL: anthonyloperfido@miamibeachfl.gov
   DESCRIPTION OF WORK: Own 60 Archer Barriers, 3 trailers and 2 Archer Beam Gates
   DATE(S) WORK PERFORMED: June 22, 2019 DOLLAR VALUE OF WORK: $650,000.00

The City may solicit from previous clients, including the City of Chicago, or any available sources, relevant information concerning Bidder's record of past performance.

9.3. EXCEPTIONS (EXPLAIN)

N/A

9.4. BIDDER CONTACT INFORMATION AND ADDITIONAL BID DATA (GROUP G)

Person to contact regarding bid:

Name: Mike Juhala, Regional Sales Director Phone: 1 (503) 688-8565

Address: 177 E Colorado Boulevard, Suite 200, Pasadena, California 91105

mjuhala@meridian-barrier.com

Manufacturer Makes And Models Proposed:

Provide for each line item and goods, work or services proposed. Attach additional sheets as needed.

Archer 1200 Barrier (MFR Part Number AB1200)

Archer Manual Hauler 2.0 (MFR Part Number AMHA003-2)

Meridian 8-Barrier Drop Deck Trailer (MFR Part Number ADDT008)

Archer Beam Gate 2.0 (MFR Part Number ABG001-2) Please see additional page attached

Manufacturer, Manufacturer's Authorized Distributor/Service Representative

INDICATE IF YOU ARE:

MANUFACTURER	YES: X	NO:
MANUFACTURER'S EXCLUSIVE DISTRIBUTOR*	YES:	NO: X
MANUFACTURER'S AUTHORIZED DISTRIBUTOR*	YES:	NO: X
MANUFACTURER'S AUTHORIZED SERVICE REPRESENTATIVE*	YES:	NO: X

* If an exclusive or authorized manufacturer's distributor, manufacture's service representative or manufacturer's authorized service representative; bidder is to provide the name, address and phone number of manufacturer and written documentation from the manufacturer verifying status, with the bid.

Licensed New Vehicle Dealer

Indicate if you are:

Licensed New Vehicle Dealer**	YES:	NO: X

* If a licensed new vehicle dealer, bidder is to provide a copy of their current Registration for Authority to Deal in Vehicles, as Issued by the Illinois Secretary of State, with the bid.

WARRANTY

At a minimum, the specified unit(s) and all mounted/furnished equipment must be warranted against defective design, material or workmanship to the full extent of the respective Original Equipment Manufacturer's standard published warranty.

The bidder will indicate, below, the length of warranty coverage offered for each item and/or components furnished under this specification. In the event of conflict between the warranty information specified by the Contractor and the respective Original Equipment Manufacturers standard warranty, the warranties deemed most advantageous to the City will control.

NOTE: WHERE ITEM IS NOT APPLICABLE, INDICATE WITH "N/A".

Component/Feature	Minimum Acceptable Coverage	Proposed Coverage
Complete base unit	Full 1-year parts & labor	Archer 1200 Barrier Lifetime Warranty (25 years)

9.4. BIDDER CONTACT INFORMATION AND ADDITIONAL BID DATA

Manufacturer Makes and Models Proposed (continued)

Archer Field Tow Bar (MFR Part Number AFTB001)

Archer Arrestor Cable – 4 FT. (MFR Part Number AAC4F001)

Archer Arrestor Cable – 10 FT. (MFR Part Number AAC10F001)

Archer 8-Barrier Trailer Kit (MFR Part Number ATRKIT008)

Archer 1 Channel ADA Cable Protector (MFR Part Number ACP001ADA)

Wayfinding Package (MFR Part Number AMB1200WSP)

Graphics Package (MFR Part Number AGP001)

Archer Touch-Up Paint (MFR Part Number ATUPLK001)

Custom Paint and Rust Prevention (MFR Part Number ACPR001)

Component/Feature	Minimum Acceptable Coverage	Proposed Coverage
Other	Full 1-year parts & labor	Other Meridian products - Full 1 year Parts & Labor

Location of Repair and Maintenance Shop(s)

Meridian Rapid Defense Group LLC

14 Morse Road

Bennington, VT 05201

ARTICLE 10. EXECUTION AND ACCEPTANCE PAGES

Bid execution and acceptance pages follow.

Remainder of page intentionally blank.

10.1. Bid Execution By a Corporation

The undersigned, hereby acknowledges having received Specification Number **1219096** containing a full set of Contract Documents, including, but not limited to, 1) Requirements for Bidding and Instructions to Bidders, 2) Standard Terms and Conditions - General Conditions, 3) Special Conditions for Supply Contracts, 4) Contract Plans or Drawings (if applicable) 5) Detailed Specifications, 6) Proposal Pages, 7) Certifications, and 8) Addenda Nos. (none unless indicated here) _____, and affirms that the corporation shall be bound by all the terms and conditions contained in the Contract Documents, regardless of whether a complete set thereof is attached to this proposal or bid, except only to the extent that the corporation has taken express written exception thereto in the sections of this specification designated for that purpose.

Under penalty of perjury, the undersigned: (1) warrants that he/she was authorized to submit an EDS on behalf of the Disclosing Party on-line; (2) warrants that all certifications and statements contained in the EDS are true, accurate and complete as of the date the EDS was submitted on-line; and (3) further warrants that, as of the date of submission of this proposal or bid, there have been no changes in circumstances since the date that the EDS was submitted that would render any certification in the EDS false, inaccurate or incomplete.

Further, the undersigned being duly sworn deposes and says on oath that no disclosures of ownership interests have been withheld and the information provided therein to the best of its knowledge is current and the undersigned has not entered into any agreement with any other Bidder (proposer) or prospective Bidder (proposer) or with any other person, firm or corporation relating to the price named in this proposal or any other proposal, nor any agreement or arrangement under which any act or omission in restraint of freedom of competition among Bidders (proposers) and has not disclosed to any person, firm or corporation the terms of this bid (proposal) or the price named herein.

Proposals must be submitted with original signatures in the space provided. Proposals not properly signed will be rejected.

NAME OF CORPORATION: _____
(Print or Type)

SIGNATURE OF PRESIDENT*: _____
(Or Authorized Officer) (Signature)

TITLE OF SIGNATORY: _____
(Print or Type)

BUSINESS ADDRESS: _____
(Print or Type)

*Note: In the event that this bid (proposal) is signed by other than the President, attach hereto a certified copy of that section of Corporate By-Laws or other authorization, such as a resolution by the Board of Directors, which permits the person to sign the offer for the Corporation.

ATTEST: _____
(Corporate Secretary Signature) (Affix Corporate Seal)

State of _____ County of _____

This instrument was acknowledged before me on this _____day of _____, 20___by _____as President (or other authorized officer) and _____as Secretary of _____(Corporation Name).

(Seal)

_____ Commission Expires: _____
Notary Public Signature

10.2. Bid Execution By A Joint Venture

The undersigned, hereby acknowledges having received Specification Number **1219096** containing a full set of Contract Documents, including, but not limited to, 1) Requirements for Bidding and Instructions to Bidders, 2) Standard Terms and Conditions - General Conditions, 3) Special Conditions for Supply Contracts, 4) Contract Plans or Drawings (if applicable) 5) Detailed Specifications, 6) Proposal Pages, 7) Certifications, and 8) Addenda Nos. (none unless indicated here) _____, and affirms that the Joint Venture shall be bound by all the terms and conditions contained in the Contract Documents, regardless of whether a complete set thereof is attached to this proposal, except only to the extent that the Joint Venture has taken express written exception thereto in the sections of this specification designated for that purpose.

Under penalty of perjury, the undersigned: (1) warrants that he/she was authorized to submit an EDS on behalf of the Disclosing Party on-line; (2) warrants that all certifications and statements contained in the EDS are true, accurate and complete as of the date the EDS was submitted on-line; and (3) further warrants that, as of the date of submission of this proposal or bid, there have been no changes in circumstances since the date that the EDS was submitted that would render any certification in the EDS false, inaccurate or incomplete.

Further, the undersigned being duly sworn deposes and says on oath that no disclosures of ownership interests have been withheld and the information provided therein to the best of its knowledge is current and the undersigned has not entered into any agreement with any other Bidder (proposer) or prospective Bidder (proposer) or with any other person, firm or corporation relating to the price named in this proposal or any other proposal, nor any agreement or arrangement under which any act or omission in restraining of free competition among Bidders (proposers) and has not disclosed to any person, firm or corporation the terms of this bid (proposal) or the price named herein.

Proposals must be submitted with original signatures in the space provided. Proposals not properly signed will be rejected.

JOINT VENTURE NAME: (Print or Type) _____

JOINT VENTURE ADDRESS: (Print or Type) _____
If you are operating under an assumed name, provide County registration number herein under as provided in the Illinois Revised Statutes 1965 Chapter 96 Sec. 4 et seq. Registration Number: _____

SIGNATURES AND ADDRESSES OF ALL MEMBERS OF THE JOINT VENTURE (If all members of the Joint Venture do not sign, indicate authority of signatories by attaching copy of Joint Venture agreement or other authorizing document):

SIGNATURE OF Authorized Party: (Signature) _____

TITLE OF SIGNATORY: (Print or Type) _____

BUSINESS ADDRESS: (Print or Type) _____

ATTEST: (Joint Venture Secretary Signature) _____
(Affix Joint Venture Seal)

OR

Joint Venturer Signature: (Signature) _____

Address: (Print or Type) _____

Joint Venturer Signature: (Signature) _____

Address: (Print or Type) _____

Joint Venturer Signature: (Signature) _____

Address: (Print or Type) _____

State of _____ County of _____

This instrument was acknowledged before me on this _____day of _____, 20___by _____as President (or other authorized officer) and

_____as Secretary of _____(Corporation Name).

Notary Public Signature: _____

Commission Expires: _____ (Seal)

10.3. Bid Execution By A Partnership

The undersigned, hereby acknowledges having received Specification Number **1219096** containing a full set of Contract Documents, including, but not limited to, 1) Requirements for Bidding and Instructions to Bidders, 2) Standard Terms and Conditions - General Conditions, 3) Special Conditions for Supply Contracts, 4) Contract Plans or Drawings (if applicable) 5) Detailed Specifications, 6) Proposal Pages, 7) Certifications, and 8) Addenda Nos. (none unless indicated here) None , and affirms that the partnership shall be bound by all the terms and conditions contained in the Contract Documents, regardless of whether a complete set thereof is attached to this proposal, except only to the extent that the partnership has taken express written exception thereto in the sections of this specification designated for that purpose.

Under penalty of perjury, the undersigned: (1) warrants that he/she was authorized to submit an EDS on behalf of the Disclosing Party on-line; (2) warrants that all certifications and statements contained in the EDS are true, accurate and complete as of the date the EDS was submitted on-line; and (3) further warrants that, as of the date of submission of this proposal or bid, there have been no changes in Circumstances since the date that the EDS was submitted that would render any certification in the EDS false, inaccurate or incomplete.

Further, the undersigned being duly sworn deposes and says on oath that no disclosures of ownership interests have been withheld and the information provided therein to the best of its knowledge is current and the undersigned has not entered into any agreement with any other Bidder (proposer) or prospective Bidder (proposer) or with any other person, firm or corporation relating to the price named in this proposal or any other proposal, nor any agreement or arrangement under which any act or omission in restraining of free competition among Bidders (proposers) and has not disclosed to any person, firm or corporation the terms of this bid (proposal) or the price named herein.

Proposals must be submitted with original signatures in the space provided. Proposals not properly signed will be rejected.

BUSINESS NAME: (Print or Type) Meridian Rapid Defense Group LLC

BUSINESS ADDRESS: (Print or Type) 177 E Colorado Boulevard, Suite 200, Pasadena, CA 91105

If you are operating under an assumed name, provide County registration number herein under as provided in the Illinois Revised Statutes 1965 Chapter 96 Sec.4 et seq. Registration Number: _N _A_____

SIGNATURES AND ADDRESSES OF ALL MEMBERS OF THE PARTNERSHIP
(If all General Partners do not sign,indicate a ing copy of partnership agreement or other authorizing document):

Partner Signature: (Signature) _ls,d :=::! ::.....,.. ::+:..._____ .£P.!:e.l::Ste.£r.1,D ...1Whi::!.!! ·tfll,o:!!r d _ _

Address: 'rint or Type) 177 E Colorado Boulevard, Suite 200, Pasadena, CA 91105

Partner Signature: ignature) _____ Georgina W. Whitford

Address: (Print or Type} 177 E Colorado Boulevard, Suite 200, Pasadena, CA 91105

Partner Signature: (Signature) __N:::.c.L..=A=----------

Address: (Print or Type) _____

State of *[7.'#i/j>.L...'* 'Countyof --- - 'fl

p(:!E D u/1/TP't'

This instrument was acknowledged before me on this ***Jt.*** day of .-.... 20***U*** by _____ as President (or other authorized officer)
fld-91114- . ltv//frM/tD
and _____as Secretary of Meridian Rapid Defense Group LLC (Corporation Name).

Notary Public Signature: .shr *:fTT1'J Et:>*

Commission Expires: ***&>f/3e:>/¼z3-*** (Seal)

ACKNOWLEDGMENT

A notary public or other officer completing this certificate verifies only the identlty of the individual who signed the document to which this certificate is attached, and not the truthfulness, accuracy, or validity of that document.

State of California
County of Los Angeles

On ___ 8, .0'-z v /; _____ before me, _J_u_a_n_C_a_b_ra_l_e_s,_N_o_ta_ry_P_u_b_lic_ __
(insert name and title of the officer)

personally appeared *t/e>Jt* */N:f-* *t..://:r* */b?L)* */)* • *vvrh* ,
who proved to me on the basis of satisfactory evidence to be the person whose name(@)is/& subscribed to the within instrument and acknowledged to me that he/she/@ executed the same in his/her/th@ authorized capacity(i@), and that by his/her/their signature(,Q on the instrument the person(s), or the entity upon behalf of which the personeacted, executed the instrument.

I certify under PENALTY OF PERJURY under the laws of the State of California that the foregoing paragraph is true and correct.

WITNESS my hand and official seal.

JUAN CABRALES
COMM. #2240664
NOTARY PUBLIC - CALIFORNIA
LOS ANGELES COUNTY
My Commission Expires 04/30/2022

ignature _____ **(Seal)**

EXHIBIT "A"

CONTRIBUTED CAPITAL

Peter D. Whitford	$843,000	+(initial)

EXHIBIT "B"

PERCENTAGE OWNERSHIP OF LLC UNITS

Peter D. Whitford	98.00 Units	+(initial)
Georgina W. Whitford	2.00 Units	dii:) (initial)

10.5. Bid Acceptance by City

Contract No. 201170

Specification No. 1219096

Vendor Name: ---"'-M e r id=ia=n R=a=p id D e fe=n s=e"'----"G"""r=o=u=p L=L C ---------

Total Amount {Value): 2,090,750.90 {Group A, D and G)

Fund Chargeable: 018-RH3K-58-2705-058-20104752-0400-220400,019-WY38-58·2705-058-20105487-0400-220400 and Various

The undersigned, on behalf of the CITY OF CHICAGO, a municipal corporation of the State of Illinois, hereby accept the foregoing bid items as identified in the proposal.

CITY OF CHICAGO

Mayor Date

Comptroller Date

Chief Procurement Officer Date

10.4. Bid Execution By a Sole Proprietor

The undersigned, hereby acknowledges having received Specification Number **1219096** containing a full set of Contract Documents, including, but not limited to, 1) Requirements for Bidding and Instructions to Bidders, 2) Standard Terms and Conditions - General Conditions, 3) Special Conditions for Supply Contracts, 4) Contract Plans or Drawings (if applicable) 5) Detailed Specifications, 6) Proposal Pages, 7) Certifications, and 8)) Addenda Nos. (none unless indicated here) _____, and affirms that the sole proprietor shall be bound by all the terms and conditions contained in the Contract Documents, regardless of whether a complete set thereof is attached to this proposal, except only to the extent that the sole proprietor has taken express written exception thereto in the sections of this specification designated for that purpose.

Under penalty of perjury, the undersigned: (1) warrants that he/she was authorized to submit an EDS on behalf of the Disclosing Party on-line; (2) warrants that all certifications and statements contained in the EDS are true, accurate and complete as of the date the EDS was submitted on-line; and (3) further warrants that, as of the date of submission of this proposal or bid, there have been no changes in
Circumstances since the date that the EDS was submitted that would render any certification in the EDS false, inaccurate or incomplete.

Further, the undersigned being duly sworn deposes and says on oath that no disclosures of ownership interests have been withheld and the information provided therein to the best of its knowledge is current and the undersigned has not entered into any agreement with any other Bidder (proposer) or prospective Bidder (proposer) or with any other person, firm or corporation relating to the price named in this proposal or any other proposal, nor any agreement or arrangement under which any act or omission in restraining of free competition among Bidders (proposers) and has not disclosed to any person, firm or corporation the terms of this bid (proposal) or the price named herein.

Proposals must be submitted with original signatures in the space provided. Proposals not properly signed will be rejected.

SIGNATURE OF PROPRIETOR: _____
(Signature)

DOING BUSINESS AS: _____
(Print or Type)

Business Address: _____
(Print or Type)

_____
(Print or Type)

If you are operating under an assumed name, provide County registration number herein under as provided in the Illinois Revised Statutes 1965 Chapter 96 Sec. 4 et seq.

Registration Number: _____
(Print or Type)

State of _____; County of _____

This instrument was acknowledged before me on this _____day of _____, 20___by _____as President (or other authorized

officer) and _____as Secretary of _____(Corporation Name)._____

_____

Notary Public Signature: _____

Commission Expires: _____ (Seal)

EXHIBITS

Exhibits follow this page. Remainder of page intentionally blank.

EXHIBIT 1: INSURANCE CERTIFICATE OF COVERAGE

ACORD

MERIRAP-01 DMOORE

CERTIFICATE OF LIABILITY INSURANCE

DATE (MM/DDIYYYY) 8/5/2022

THIS CERTIFICATE IS ISSUED AS A MATTER OF INFORMATION ONLY AND CONFERS NO RIGHTS UPON THE CERTIFICATE HOLDER. THIS CERTIFICATE DOES NOT AFFIRMATIVELY OR NEGATIVELY AMEND, EXTEND OR ALTER THE COVERAGE AFFORDED BY THE POLICIES BELOW. THIS CERTIFICATE OF INSURANCE DOES NOT CONSTITUTE A CONTRACT BETWEEN THE ISSUING INSURER(S), AUTHORIZED REPRESENTATIVE OR PRODUCER, AND THE CERTIFICATE HOLDER.

IMPORTANT: If the certificate holder is an ADDITIONAL INSURED, the policy(ies) must have ADDITIONAL INSURED provisions or be endorsed. If SUBROGATION IS WAIVED, subject to the terms and conditions of the policy, certain policies may require an endorsement. A statement on this certificate does not confer rights to the certificate holder in lieu of such endorsement(s).

PRODUCER **License # L100460**	CONTACT NAME:
Knauf Maxwell Insurance Services **2900 W. Broadway** **Los Angeles, CA 90041**	W8,NJo, Ext): **(323) 550-7900** I'FAX (A/C, No):**(323) 256-0800**
	tt'J ss: **knaufreception@kmins.com**

INSURER(SI AFFORDING COVERAGE	NAIC#
INsuRERA: **Great American E & S Insurance Comoanv**	**37532**
INsuRERB **,ComoWest Insurance Comoanv**	**12177**
INSURERC:	
INSURERD:	
INSURERE:	
INSURERF:	

INSURED

Meridian Rapid Defense Group, LLC
177 E. Colorado Blvd., Suite 200
Pasadena, CA 91105

COVERAGES CERTIFICATE NUMBER: REVISION NUMBER:

THIS IS TO CERTIFY THAT THE POLICIES OF INSURANCE LISTED BELOW HAVE BEEN ISSUED TO THE INSURED NAMED ABOVE FOR THE POLICY PERIOD INDICATED. NOTWITHSTANDING ANY REQUIREMENT, TERM OR CONDITION OF ANY CONTRACT OR OTHER DOCUMENT WITH RESPECT TO WHICH THIS CERTIFICATE MAY BE ISSUED OR MAY PERTAIN, THE INSURANCE AFFORDED BY THE POLICIES DESCRIBED HEREIN ISSUBJECTTOALL THE TERMS, EXCLUSIONS AND CONDITIONS OF SUCH POLICIES. LIMITS SHOWN MAY HAVE BEEN REDUCED BY PAID CLAIMS.

INSR LTR	TYPE OF INSURANCE	ADDL INSD	SUBR WVD	POLICY NUMBER	POLICY EFF fMM/DD/YYYYI	POLICY EXP fMM/DD/YYYYI	LIMITS	
A	X COMMERCIAL GENERAL LIABILITY CLAIMS-MADE [K]OCCUR	X	X	**PL1744899-05**	**8/4/2022**	**8/4/2023**	EACH OCCURRENCE	$ **1,000,000**
							8 t/ H9E b7r?ence\	$ **500,000**
							MED EXP (Anv one person)	$ **20,000**
							PERSONAL & ADV INJ.JRY	$ **1,000,000**
	GEN LAGGREGATE LIMIT AP P LIES PER						GENERAL AGGREGATE	$ **2,000,000**
	POLICY '.f8f LOC						PRODUCTS - COMP/OP AGG	$ **2,000,000**
	OTHER:							$
	AUTOMOBILE LIABILITY						COMBINED SINGLE LIMIT /Ea aceidentl	$
	ANY AUTO						BODILY INJ.JRY (Per person)	$
	OWNED AUTOS ONLY / SCHEDULED AUTOS						BODILY INJ.JRY (Per accidentl	$
	RT Ps ONLY / 8¥oii1Ji.						PROPERTY DAMAGE (Per accident)	$
								$
A	UMBRELLA LIAB H OCCUR							
	X EXCESS LIAB CLAIMS-MADE			**XS2664575-04**	**8/4/2022**	**8/4/2023**	EACH OCCURRENCE	$ **5,000,000**
	OED I X I RETENTION$ 0						AGGREGATE	$ **5,000,000**
								$
B	WORKERS COMPENSATION AND EMPLOYERS' LIABILITY ANY PROPRIETOR/PARTNER/EXECUTIVE OFFICER/MEMBER EXCLUDED? (Mandatory in NH) Y/N ☐ If yes, describe under DESCRIPTION OF OPERATIONS below	NIA		**WCV5505417**	**12/27/2021**	**12/27/2022**	X If TUTE I I ER	
							E.L. EACH ACCIDENT	$ **1,000,000**
							E L DISEASE- EA EMPLOYEE	$ **1,000,000**
							E.L. DISEASE- POLICY LIMIT	$ **1,000,000**

DESCRIPTION OF OPERATIONS/ LOCATIONS I VEHICLES (ACORD 101, Additional Remarks Schedule, may be attached if more space is required)
City of Chicago **RFB** is included as additional insured as respects the general liability as required by contract only as per the attached policy provisions.
Waiver of subrogation apples in favor of the City of Chicago as required by contract only as per the attached policy provisions.

CERTIFICATE HOLDER

City of Chicago
121 N LaSalle Street
Chicago, IL 60602

CANCELLATION

SHOULD ANY OF THE ABOVE DESCRIBED POLICIES BE CANCELLED BEFORE THE EXPIRATION DATE THEREOF, NOTICE WILL BE DELIVERED IN ACCORDANCE WITH THE POLICY PROVISIONS.

AUTHORIZED REPRESENTATIVE

'1Z,.LJ >;;;:_?

© 1988-2015 ACORD CORPORATION. All rights reserved.
The ACORD name and logo are registered marks of ACORD

MERIREN-01 DM OORE

CERTIFICATE OF LIABILITY INSURANCE

DATE (MM/DDIYYYY)
9/6/2022

THIS CERTIFICATE IS ISSUED AS A MATTER OF INFORMATION ONLY AND CONFERS NO RIGHTS UPON THE CERTIFICATE HOLDER. THIS CERTIFICATE DOES NOT AFFIRMATIVELY OR NEGATIVELY AMEND, EXTEND OR ALTER THE COVERAGE AFFORDED BY THE POLICIES BELOW. THIS CERTIFICATE OF INSURANCE DOES NOT CONSTITUTE A CONTRACT BETWEEN THE ISSUING INSURER(S) , AUTHORIZED REPRESENTATIVE OR PRODUCER, AND THE CERTIFICATE HOLDER.

IMPORTANT: If the certificate holder is an ADDITIONAL INSURED, the policy(ies) must have ADDITIONAL INSURED provisions or be endorsed. If SUBROGATION IS WAIVED, subject to the terms and conditions of the policy, certain policies may require an endorsement. A statement on this certificate does not confer rights to the certificate holder in lieu of such endorsement(s).

PRODUCER License # L100460	CONTACT NAME
Knauf Maxwell Insurance Services **2900 W. Broadway** **Los Angeles, CA 90041**	N W8, Jo, Ext): **(323) 550-7900** FAX I (A/C, **No):(323) 256-0800** **knaufreception@kmins.com**

INSURER(SI AFFORDING COVERAGE	NAIC#
1NSuRER A :**American Fire and Casualty Comoanv**	**24066**
INSURERS:	
INSURER C:	
INSURER D:	
INSURER E:	
INSURER F :	

INSURED

Meridian Rapid Defense Group, LLC
177 E. Colorado Blvd., Suite 200
Pasadena, CA 91105

COVERAGES **CERTIFICATE NUMBER:** **REVISION NUMBER:**

THIS IS TO CERTIFY THAT THE POLICIES OF INSURANCE LISTED BELOW HAVE BEEN ISSUED TO THE INSURED NAMED ABOVE FOR THE POLICY PERIOD INDICATED. NOTWITHSTANDING ANY REQUIREMENT, TERM OR CONDITION OF ANY CONTRACT OR OTHER DOCUMENT WITH RESPECT TO WHICH THIS CERTIFICATE MAY BE ISSUED OR MAY PERTAIN, THE INSURANCE AFFORDED BY THE POLICIES DESCRIBED HEREIN IS SUBJECT TO ALL THE TERMS, EXCLUSIONS AND CONDITIONS OF SUCH POLICIES. LIMITS SHOWN MAY HAVE BEEN REDUCED BY PAID CLAIMS.

INSR LTR	TYPE OF INSURANCE	ADDL INSD	SUBR WVD	POLICY NUMBER	POLICY EFF fMM/DD/YYYYI	POLICY EXP fMM/DD/YYYYI	LIMITS	
	COMMERCIAL GENERAL LIABILITY						EACH OCCURRENCE	$
	CLAIMS-MADE OCCUR						8[illegible]t/[illegible]H9E[illegible]b7r?ence\	$
							MED EXP (Any one person)	$
							PERSONAL & ADV INJ.JRY	$
	GEN'L AGGREGATE LIMIT APPLIES PER:						GENERAL AGGREGATE	$
	POLICY ☐ ☐ LOC						PRODUCTS - COMP/OP AGG	$
	OTHER :							$
A	AUTOMOBILE LIABILITY						COMBINED SINGLE LIMIT /Ea aceidentl	$ **1,000,000**
	X ANY AUTO			**BAA59267598**	**11/19/2021**	**11/19/2022**	BODILY INJ.JRY (Per person)	$
	OVVNED AUTOS ONLY — SCHEDULED AUTOS						BODILY INJ.JRY (Per accidentl	$
	X R [illegible] X [illegible]						PROPERTY DAMAGE (Per accident)	$
								$
	UMBRELLA LIAB OCCUR						EACH OCCURRENCE	$
	EXCESS LIAB CLAIMS-MADE						AGGREGATE	$
	OED RETENTION$							$
	WORKERS COMPENSATION AND EMPLOYERS' LIABILITY Y/N						[illegible]TUTE OTH-ER	
	ANY PROPRIETOR/PARTNER/EXECUTIVE OFFICER/MEMBER EXCLUDED? (Mandatory in NH)	**NIA**					E.L. EACH ACCIDENT	$
	If yes, describe under DESCRIPTION OF OPERATIONS below						E L DISEASE - EA EMPLOYEE	$
							E.L. DISEASE - POLICY LIMIT	$

DESCRIPTION OF OPERATIONS/ LOCATIONS I VEHICLES (ACORD **101,** Additional Remarks Schedule, may be attached if more space is required)

CERTIFICATE HOLDER

The City of Chicago

CANCELLATION

SHOULD ANY OF THE ABOVE DESCRIBED POLICIES BE CANCELLED BEFORE THE EXPIRATION DATE THEREOF, NOTICE WILL BE DELIVERED IN ACCORDANCE WITH THE POLICY PROVISIONS.

AUTHORIZED REPRESENTATIVE

'IZ,.LJ >;;:._?

© 1988-2015 ACORD CORPORATION. All rights reserved.

The ACORD name and logo are registered marks of ACORD

PLI744899-05

ESG 3206 (Ed 01116)

THIS ENDORSEMENT CHANGES THE POLICY. .PLEASE READ IT CAREFULLY;

SPECIALTY PLUS ENOORSEMENT

This endorsement modifies insuranc_e provided under th following:

COMMERCIALGENERALLIAHILITY COV RAGE-PART

This is .a swnmary of the various additional coverages and coverage modifications provided by this endorsement. For complete details on specific coverages: cohsu.lt the Policy vvording.

Coverage	Limit of Insurance	Page
No·n-Owned Aircraft	lhClLided	2
NonaOwned Watercraft	Included	2
Medical Payments Increased Limits	$20,000	3
who Is An Ir:isured: Broadened Named Insured	Included	3
Who Is An Insured: Fellow Employee	Included	3
Who Is An Insured: Newly Formed or Acquired Organizations	Included	4
Knowledge of Occurrence, Claim or Suit	Included	4
Unintentional Errors Or Ornissions	Included	4
P-ersonal & Advertising Injury Amendment of biscrimina.tion or .Humiliation	Included	4
Incidental M1:1lpractice Liability	Included	5
Additional Insured: Owners..Lessees, and contractors	Included	5
Additional Insured: Vendors	Included	6
Primary and Non-Contributory Extension	Included	8
Darnage to Premises Rented tp You (Fir€!, Ligtitning, and "Explosion")	$500 000	8
Waiver of S1.1brogalion	Included	g
Property Damage - Elevators	Included	9

coverage	Limit of Insur nce	Page
contractual Liability for Railroad Exposurl;:!s	Included	10
Supplementary Payments:• Bail Bonds	$2,500	10
supp!etnentary Payments: Loss of Earnings	$'500	10
Amended Bodily LnJury Def ihition	lhclLided	10

A. Non-Owned Aircraft

.lJnder par21graph **2. Exclusions of SECTION** I - **COVERAGES - Coverage A - Bodily Injury and Property Darnage Liability,** exclusion **g. Aircraft, Auto or Watercraft** does not apply fo an aircraft provided:

1. it is not owtie.d by any insured:

2. it is hired, ch.artered or loaned with a trained paid crew;

3. the pilot in command holds a currently effective certificate, issued by the duly constituted awthOrity of the United $tc;1tes of America *or* Car-iada, designc;1fing Hirn or her a. commercial or airline pilot; and

4. it is not being used to carry persons or property for a charge.

However, the insurance afforded by this provision does not apply if there is available.to the Insured other valid and collectible insurance, whether p[imary, excess Cother than insurance written to apply specifically in excess Qf this Policy), contingent or on any other basis, that would aiso apply to the ibss covered underthis prmiision.

B. Non-Owned Watercraft

Under paragraph **2, Exclusions of SECTION** I - **COVE.RAGES - Coverage A - Bodily Injury and Property Damage Liability,** subparagraph **(2)** of exclusion **g. Aircraft; Auto or Watercraft** is replaced by the following:

This exclusion does not apply to

(2) A watercraft you do not own that is:

(a) less than 55 feet long; and

(b) not being used to carry persorTs .or property for a charge.

However, the insurance afforded by this provision does not apply to watercraft 27 to 55 feet long if there is available to the Insured other valid and collectible insurance; 'whetner primary, excess (other than insurance written to apply specifically in excess of this Policy), contingent or on any oth.er. ba..sis;. that wo.uld a lso apply to the lo ss co vered wnder th is p rovision.

C. Medical Payments Increased Limits

I.Jnless **Coverage C - Medical Payments;** or the Producl-Cornpleted Operati.ohs Hazard has been excluded frorn lhis Policy, the fo:llowing applies:

Under paragraph **2. Exclusions of SECTION** I - **COVERAGES, Coverage C - Medical Payments,** exclusion **f. Products-Completed Operations Hazard** is replaced by the following:

f. Product-Completed Qperati.ons Hazard

Included within lhe [11]products-compl.eted operations hazard."

However, th is exclusion does not apply to expenses for dental services

The Medical Expense Lirnit in paragraph **7. of SECTION III - LIMITS OF INSURANCE** is replaced by th.e following M8dical Expense Limit:

me Medical Expense Limit provided by triis Policy shall be the greater of:

a. $20,00D: or

b. the arnount shown in the Declarations for Medical Expense Limit

This provision **7.** is subject to all the terms of **SECnON III •· LIMITS OF INSURANCE**

D. Who Is An insured: Broadened Named Insured

Under **SECTION** II ·• **WHO IS AN INSURED;** the following item **2.e.** is added:

e. Any subsidiary and subsidiary thereof, of yours which is a legally incorporated entity of which you own a financial interest of more than 50% of voting stock on the effective date of this Coverage P;art. The Insurance afforded herein for any su.bsid iary not named in this Coverage Part as a Narned Insured does not appiy to injury or damage wilh respect to which an insured under this Coverage Part is also an insured under another policy or would be an insured under such policy but for its termination or the exhaustion of its Limits of Insurance

E; Who Is An Insured: Fellow Employee

1. The follqwirag is added to paragraph **2,a.(1) of SECTION** II - **WHO IS AN INSURED**

Paragraph **(aI** and **(b)** above do not apply to "bodily injury" or,;personal and advertising injury" caused by a co-"employee" whiie in the course of his or her employment or performing duties related to the conduct of yOJJr business. However, none of these co-,.employees" are Jns\.lreds for [11]bodily injur/[1] or [11]persona:1 and advertising injury[11] arising out of the'ir vJillful conduct, which is defined as the pur.poseful or willful intent to cause "bodily injury" or "personal and advertising injury," caused in whole or in part by their intoxication by liquor or controlled substances.

Paragraph **(a}** and **(b)** above do not apply to "bodily injury" or O,personal and advertising injury" caused by an "employee" who is acting .in a supervisory capacity for you Supervisory capacity as psed herein mearis the "employee's" job responsibilities assigned by you;• irlcluding th (:lire¢t supervision of other "employees" of yours. However, none of these '1employees" are insureds for "bodily injury" or •:personal and advertising injury" arising out of their willful condu(::t, whii::h is defined as the purposeful or willful intent to cause "bodify injury" or "personal and advertising injury," caused in whole or in pi3rt by their iritoi<ication by liquor or controlled substances

This coverage is excess over any other valid ahd coliectible insurance available to your "employee" or "volunteer v-torker."

F. Wh9 Is An Insured:. Newly Formed.or Acquired Organizations

Paragraph **3.** of **SECTION** II - **WHO .IS AN INSURED** is replace.d by the following:

3. Any organization you newly acquire or form and civer which you maintain o Vnership brmajority interest, **will** qualify as a Named Insured if there is no other similar· insurance available to that organizations However:

a. coverage under this provision is afforded only until the next occurring annual anniversary of the beg ihhing. of the policy period sho\/Vn tn the Declatatiohs, or the end of the policy period, whic:hever is earlier; and

b. coverage **A** does not apply to "bodily injury" or "property damage" that occurred before you a.cq uired or formed th:e orga:r1ization; and

e. coverage **B** does not apply to •ipersonai and advertising injury" arising out of an offer1se committed before you acquired or formed the organization; and

d. records and descriptions of operations must be maintained by the first Nc1med Insured.

No person ,or organization is an insured with respect to the conduct of any current or past partnership, joint venture or. limited liability company that is not sho1J1tn as a Named Insured in the Declarations or qualifies as ar1 insured under this provision.

G. Knowledge of Occurrence, Claim or Suit

Under **SECTION IV - COMMERCIAL GENERAL LIABILITY CONDITIONS,** the fol lowing is added to Cbnditibn **2. Duties in the Event of Occurrence, Offerise,. Claim or Suit:**

Knowledge of any "occurrence", claim, or "suit" by any agent, servarit *or* "employee" of the Nc1med Insured does **not** in itself constitute knowiedge by the Insured unless notice of such "occurrence';: claim or "suit" shall hi3Ve been received by:

a. you; if you are an irldividual;

b. a partner, if you are a partnerst1ip; or

t:. an executive officer or irisurance manager, if you are. a corporation.

H. Unintentional Errors or Omissioris

Under **SECTION IV - COMMERCIAL GENERAL LIABILITY CONDITIONS,** the following is added to Condition **6. Representations:**

If you unintentionally fail to disclose any hazards existing at the inception date qf this Policy, we Will not de ny co verage under this Cove_•rage_· Fo_rm because of such fa_·'ilure_.

Hov«ever, this does riot affect our right *tb* collect additional premium, exercise our right of c_ancellation or non-renewal, or enforce other legal rights based upon .a material rniSrepresentatio_n in resPonse to **a** specific question in the appfication for this Policy.• • ••• •• • •• • •

I. PersonalandAdvertising Injury Ame_ndment of Discrimin.atjon or Humiliation

Unless **Coverage B - Personal and Advertising Injury Liability** is excluded from this Policy br does r1ot appJy, the fo I IO\ving applies: ••

Under **SECTIOtJ V DEFINITIONS,** paragraph **14. Personal and Advertising Injury,** subparagraph **h.** is added:

h. discrimihatiOn or humiliation th.at results in injury to the. feeiings or reputation of a natural person, but cinly if such discrimination cir h1.Jmiliation is:

(1) not done intentionally bY or at the direction qf;

(a) an insured; or

(b) any "executive officer;" di.rector, stoc.kholder, partner cit me.rnber of the Insured; and

(2) not directly ct Lti,:Hrectlyrelated to the employme,nt, prospective employment cir terminaticih oJ employment of any person cH persons by any insured

J. Incidental Malpractice Liability

1. SECTION U - WHO IS AN INSURED is amended by deleting item **2.a.(1)(d)** in its entirely and replacing it with the following

(d) Arising .out of his or her providing Or failing to provide professional health care services: However, this exclusion does not apply to nurses, emerggncy medi.cal technicians or paramedics who are employed by you to provide medical or paramedical services.

2. Under **SECTION V . DEFINITIONS,** paragraph **3. Bodily Injury** is replaced by the following:

3. "Bodily injury" means injury, sickness, disease or "incidental medical malpractice" sustained by a person, including death of a person. "Bodily injury" also means mentai anguish, mentai injury, or shock if directly resulting from physical injury, sickness, or disease to that person.

3. The followirig is added to **SECTION V - DEFINITIONS**

"Incidental hledicai malpractice" means ,;bodily injury" arising out of the negligent rendering or failure. to render medical or paramedical services to persons by ar1y physician, dentist, nurse; emergency medical technician or paramedic who is employed by you to prcivide such services provided you are not engaged in the business or occupation of providing any services referred to in this definition.

K. Additional Insured

1. owners, Lessees, or Contractors

a. SECTION II - WHO 1$ AN INSURED is amended to include as an additional insured:

(1) Any person or organization, but only With respect to liability for "bodily injury,;: i[1]property damage[11]or [11]personal and advertising in]ury'[1] caused, in whole or in part; by;

(aJ premises or equipment you own, rent, lease or occupy; or

(b,) your acts or omissions; or

(t.) the acts or omissions. of those acting on your behalf;

In the performance of your ongoing operations for the c;1dditional insured.

However;

(a.} the insurance afforded to such additional insured only applies to the extent permitted by lavv; and

(b.) if coverage provided to the Additionai Insured is required by a contract or agreement, the insurance afforded to such additiona! insuJed Will not bf::) brpat:ler than that 1.1VhiCh you are required by the contract or agreement to provide for such additiona! ins JFed.

b. With respect to the insurance afforded to these additional insureds, the following additional exclusions apply:

(1) This insurance does not apply to "bodily injury" or "Property damage" occurring after:

{a.) all wcHk, including materials; parts or quipment furnished in connection with such work, on the project (other than service, maintenance or repairs} to be performed by or on behalf of the addittonal insured at the locat1oh of the covered operations has been completed; or

(b,) that portion of "your work" out of which the injury or damage arises has been put to its intended use by any person or organization other than another contractor or subcoritractor engaged in performing operations *fb.r* a principal as part of the same project.

(2) The insurance provided to any additional insured does not apply to "bodily injury", "property damage", or "personal and advertising injury" arising out of an architect's; engineer's, or surveyor's rendering of or failure to render any professional services including:

(a.) The preparing., approving, or failing to prepare or approve maps, shop drawings,.. opinions, reports, surveys, field orders, Change orders, or dra.Wings and specifications; or

(b;) Supervisory, inspection, architectural or engineering activities.

This exclusion applies even if the claims against any insured allege negligence or other wrongdoing in the supervision, hiring, employment, training or monitoring of others by that Insured, if the "occurrence" which caused the "bodily ihjur/' or "property damage", or the offense which caused the "personal and advertising injury"; i.nvo.lved the rendering or the failure to render any professional services by or for you.

c. With respect to the insurance afforded to these Ad.ditioha.l Insureds, the following is added to **SECTION** Ill - **LIMITS OF INSURANCE:**

If coverage provided to the Additional Insured is required by a contra:ct or agreement, the most we will pay on behalf of the Additional Insured is the amount of insurance:

(1) Required by fhe contract or agreement; or

(2) Available under the applicable Urnits of Insurance shown in the Declarations;

Whichever is less.

2. Vendors

a. SECTION II - **W!-10 ISAN iNSIJRED,** is amended to include as <ilh additional insured:

(1.) Any person or organization (referred to below as vendor), but only viith respect to "bodily injury" or "property damage" arising out of "your products" which are distributed or soid in the regular course of the vendor's business.

However

(a.) the insurance afforded to such vendor only applies to the extent permitted by law; and

(b.) if coverage provided to the vendor is required by a contract or agreement, the insurance afforded to such vendor will not be broader than that which you are required by the contract or agreement to provide for suc,h vendor,

b, With respect to, the insurari◊e afforded to these vendors, the following additional exclusions apply

(t) The in.swance afforded the vendor does not apply to:

(a.) "bodily injury" Or "property damage" for which the Vendor is obligated to pay damages by reason of the assumption o,f liability in a contract or agreement This exclusion does hot apply to liability for damages that the vendorvvauld have in the absence of the contract or agreement;

(b.) any express warranty unauthorized by you;

(c.) ahy physical or chemical change in the product made intentionally by the Vendor;

(d.) repackaging, Unless unpacked solely for the purpose of ihspection, demonstration, testing, or the substitution of parts under instructions from the manufacturer, and then repackaged in the original container;

(e.) any failure fo make such inspections, adjustments, tests or servicing as the vendor has agreed to make or normally ,undertakes to make ih the usual course of business, in connection with the distribution or sale of the products;

(f.) demonstrt:1tion, installation, servicing or repair operations, except such operations performed by the vendor in full corn,pliance with the manufacturer's writteh instructions at the vendor's premises in connection With Jhe sale of the product;

(g.) products which, after distribution or sale by you1 have been iabeled or relabeled or used as a container, part or ingredient of any other thing or substance by or for Hie vehdor;

(h.) "bodily injury" or "property damage" arising out of the sole negfrg9hce of the vendors for its own acts or omission of those of its emplo,yees or anyone else acting on its behalf. However, this exclusion does not apply to: '· '

(i) the exceptions contained in subparagraphs **(d.) or (f,);** or

(ii) such inspections, adjustments, tests or serv'icing as the vendor has agreed to make or normally undertakes to make in the usual course oJ business, ih connection with th,e distribution or sale of the products,

(2;) This insurance does hot apply to·any insured person or organization, from whom you have acquired such products, or any ingredient, part or container, entering into, accompanying or c:::ontaining such products.. , , ,

c. With respe t to the insurt:1nce afford.ed to these vendors, the following is added to **SECTION UI - LIMITS OF INSURANCE:** , , , , ,

If coverage provided to the vendor is requi ed by a contract or agreem nt, the most we will pay bn behalf of the vendor is the most amount of insurance:

(1.) Required by tt1e contract or agreement; *or*

(2) Available und.er the applicable Limits of.insurance $hown inthe Declarations;

Whichever is less.

3. Primary and Non-Contributory Extension

This provision applies to any person or organization who qua!ifies as an additional insured under any form or endorsement Uriderthis Policy.

condition **4. Other Insurance of SECTION IV - COMMERCIAL GENERAL LIABILITY CONDITIONS** is amended as foll.ows:

a. The follcwing is added to paragraph a'. **Primary Insurance:**

This insurance is primary to and will not seek contribution from any other insurance available to an additional insured under your policy provided that:

(1.) The Additional Insured is a Named Insured under such other insurance; and

(2.) You have agreed in writing ih a contract or agreement that thrs. ihsurarite would be primary and would not seek contribution from any other insurance available to the additional insured.

b. The following is added to paragraph **b. Excess Insurance:**

W en a written contract or written agreement, other than a premises lease, facilities rental contract Or agreement, an equiprnent rental or le21se contract or i"igreement, or permit issued by a state or political subdivision between you and an Additional Insured does not require this insurance to be primary or primary and non-contributory, fhis insurance is excess over any other insurance for which the Additio.nai Insured is designated as a Named Insured.

Regardless of the written agreement between you arid ari additional insured, this irisurarite is excess over any other insurance whether primary, excess, contingent or on any other basis for which the additional insured has been added as an Additional Insured on other policies.

L. Damage to Premises Rented to You

If Damage to Premises Rented to You is not otherwise excluded from this Coverage Part:

1. Under paragraph **2. Exclusions of SECTION** I - **COVERAGE A - Bodily Injury and Property Damage Liability:**

3. The last paragraph of paragraph **2. Exclusiohs** is deleted in its entirety and replaced by the tollowln g.:

Exclusions **c.** through **n.** do not apply tb damage by fire, lightning, or "explosion,11 to premises While. rented to you or temporarily occupied by you with permission of the owner. ***A*** separate Limit of Insurance applies to thiscovera.ge as described iiJ **SECIION III- - LIMITS OF INSURANCE.**

2. Paragraph **6.** Under **SECTION** Ill - **"Ln JTS OF INSURANCE** is deleted iri its entirety a.nd replaced by the following:

6. Subject to paragraph **5.** Above, the most we Will pay under **Covetage A** for damages becgµse of "property damage" to any one premfses, while rented to you, or in the case of damage caused by fire, lightning, or "explosion," whHe rente.d to you Or temporarily

occupied by you with..tile permission of the owner, for allsuch damage caused by fire, lightning. or "explosJon," proximately caused by the same event, Whether $UQh damage resuits from fire, lightning, or ;'explosion," or any combination of the three, is the. higher 6f **$500,000** or the amount shown in the Declarations for tne· Damage to Premises Rented to You Lim it

3. Under **SECTION IV COMMERCIAL GENERAL LIABILITY CONDITIONS.** subsection **4. Other Insurance,** paragraph **b. Excess: ,Insurance item (ii) of the Occurrence F<>rrn and item (iH) of the Claims-Made Form** where the words, fire insurance; appear they are changed to, insurance tor fire, lightning, or "e,xplosicin."

4. As regards coverage provided by this provision **L Dama.ge to. Premises Rented to You, SECTION V - DEFINITIONS,** paragrnph **9. Insured Contract,** subparagraph **a.** is replaced with the following:

   a. A contrnct for a lease of premises. However, that porHon of the contract for a lease of premises that indemnifies any person or organization for damage by fire,. Jightning, or "explosion," fo premises \t t1ile rented to you or ternporarily occupied by you with the per111ission of the owner is not an "insured contract."

5. As regards coverage provided by this provision **L Dama.ge to Premises Rented to You; SECTION V - DEFINITIONS** is amended by the addition of the following definition:

   "Explosion•· means a sudden release. of expanding pressure accompanied by a noise, a bursting forth of rnaJerial and evidence of tt,e scattering of debris to locations further than would h13ve resulted by gravity alone.

   "Explosion" does not include any of the following:

   (a) artificially gen.erated electrical current including electrical arcing, that disturbs electrical devices, appliances or wires;

   (b) rupture or bursting of water pipes;

   (c.) explosion of steam boilers, stearn pipes, steam engines or steam turbines owned or leased by you, or operated under your control; or

   (d) rupture or bursting caused by centrifugal force.

M. Waiver of Subrogation

Under **SECTfON IV :.. COMMERCIAL GENERAL LIABILITY CONDITIONS,** subsection **8. Transfer or Rights of Recovery Against Oth rs to Us,** the fol lowing paragraph is added:

b. If required by a written "insured contract" executed prior to the occurrence or offense, *\rJe* waive our right of recovery we have against any person or organization named in such "insured contract," be.cause of payments we make fpr injury or damage arising out of yoL1r ongoing operations or "your work" for that person or organizatio:n.

N. Property Damage Elevators

1. Under paragraph **2.. Exclusions of SECTION** I - **COVERAQE A • ijodily Injury and Property Damage Uilbility,** subparagraphs **(3);** and **(4)** Or exclusi:on **j. Damage to Property** do n.bt apply if such "property damage" resUlts from the use, of elevators.

2. The foilowing is added to **SECTION JV • COMMERCIAL GENERAL LIA,BILITY CONDITIONS,** Condition **4. Other Insura,nce,** paragraph **b.)(cess Insurane.e**

The insurance afforded by this provision of this endorsement is exces:s over any property insurance, whether primary, excess, contingent or on any other basis,

0. Contractual Liability for Railroad Exposures

Under **SECTION V • DEFINITIONS,** paragraph **9. Insured Contract,,** subparagraph **f.(1}** is deleted in its entirety,

p,; Supplementary Payments

1. In the **Supp,leo,entary Payments • Cover:ages A and B** provision, paragraph **1.b.** is replaced With:

b. Up to **$2,500** for the cost of bail bonds required because of accidents or traffic law violations arisirig out of the use of any vehicle to which the Bodily Injury Liability Coverage applies We do not have to furnish these bonds.

2. In the **Supplementary Payments • Coverages A and B** provision, paragraph **1.d.** is replaced by the following:

d. All reasonable expenses incurred by the Insured at our request to assist us in the investigation or defense of the daim or "suit," Including actual loss of earnings UP to **$500** a day pecause. of time off work:

Q. Amended Bodil y Injury Definition

Under **SECTION V·DEFINITIONS,** definition **3. Bodily injury** is replaced by the following:

3. **"Bt>dily injL;Jry"** means bodily injury, sickness, or disease sustained bY a person, including death of a person. "Bodily injury" also means mental anguish, mental injury, or shock, if directly resulting from physical injury, sickness, or disease to that person

EXHIBIT 2: SEXUAL HARASSMENT POLICY AFFIDAVIT (SECTION 2-92-612)

The policy prohibiting sexual harassment as described in Section 2-92-612 of the Municipal Code of Chicago ("MCC") is applicable to contracts paid from funds belonging to or administered by the City.

Contract title: **Portable Vehicle Impact Devices**
Specification **#:1219096**

In accordance with requirements set forth in Section 2-92-612 of the MCC, Contractor hereby attests that Contractor has a written policy prohibiting sexual harassment that includes, at a minimum, the following information:

(i) the illegality of sexual harassment;

(ii) the definition of sexual harassment; and

(iii) the legal recourse available for victims of sexual harassment.

Contractor understands that it may be required to produce records to the CPO to verify the information provided.

Under penalty of perjury the person signing below: (1) warrants that he/she is authorized to execute this Affidavit on behalf of Contractor, and (2) warrants that all certifications and statements contained in this Affidavit are true, accurate, and complete as of the date of execution.

Name of Contractor: Peter Whitford on behalf of Meridian Rapid Defense Group LLC
(Print or Type)

Signature of Authorized Officer: _____

(Signature)

Title of Signatory: Managing Member | Chief Executive Officer
(Print or Type)

State of C-'#1 / - '-.9

County of hs "'7--o/c'JG'$'

Signed and sworn (or affirmed) to before me on '°'./4-. (date) by

t:• name/s of person/s making statement).

SEE ATTACHED

(Signature of Notary Public)

(Seal)

A notary public or other officer completing this certificate verifies only the identity of the individual who signed the document to which this certificate is attached, and not the truthfulness, accuracy, or validity of that document.

State of California
County of Los Anqeles

Subscribed and sworn to (or affirmed) before me on this 2,Ci? day of rt CJ,II , 20 **2'1-,** by /'6;lr, t). t_„jH1rfi„'t:D ,

proved to me on the basis of satisfactory evidence to be the personwho appeared before me.

COMM. #2240664
NOTARY PUBLIC- CALIFORNIA
LOS ANGELES COUN1Y

(Seal) Signature lt

EXHIBIT 3: SUPPLEMENTAL CONTRACT TERMS RELATING TO EXECUTIVE ORDER 2021-2

1.1. **Supplement to Special Conditions Regarding MBE Commitment and WBE Commitment or Special Conditions Regarding DBE Commitment: Quarterly Reporting**

1.1.1. Policy

Pursuant to Mayoral Executive Order 2021-2, contractors must submit quarterly reports regarding the utilization of MBE and WBE firms, or DBE firms, on their contracts.

1.1.2. Projected Utilization Schedule

Prior to contract award, anticipated contract awardee must submit a "Projected Utilization Schedule," in a form acceptable to the CPO, showing when and to what extent in the schedule for performance of the Contract the MBEs and WBEs or DBEs listed on the Schedules C and D for the Contract are expected to be used toward the contract-specific goals. Contracts that do not have goals are exempt from this requirement.

For master agreements for task order professional services awarded pursuant to a Request for Qualifications, Projected Utilization Schedules for each task will be submitted with the task order proposal and finalized prior to award or assignment of the task, as applicable.

The CPO may require explanations or submittal of a revised or more detailed Schedule at any time prior to or after award of the contract as the CPO deems appropriate in order to facilitate compliance with the M/WBE or DBE commitments of the Contract.

1.1.3. Quarterly Summary Utilization Reports

Each quarter, Contractor must submit a Summary Utilization Report, in a form acceptable to the CPO, comparing projected usage with actual usage. If actual usage is more than 5% below the value of projected usage (based on a percentage of the value of anticipated M/WBE expenditures), Contractor must provide an explanation for the discrepancy, and a recovery plan. Recovery plans should include a proposed revised Projected Utilization Schedule if Contractor anticipates that actual utilization will not meet projected utilization before the next quarterly report would be due. The CPO may require Contractor to meet with the City to discuss and revise the recovery plan as the CPO deems appropriate.

1.1.4. Changes to Compliance Plan

Requests for approval of revisions to Contractor's Compliance Plan must be accompanied by a revised Projected Utilization Schedule consistent with the request.

1.1. **Supplement to Standard Terms and Conditions: Business Diversity Program Reporting**

1.1.1. Policy

Pursuant to Mayoral Executive Order 2021-2, contractors must submit annual reports regarding the contractors' efforts regarding utilization of MBE and WBE firms, and other historically underutilized firms.

1.1.2. Definitions

"Business Diversity Program" means a program or initiative of a business enterprise which encourages or facilitates the use of minority-owned, women-owned, and other historically underutilized businesses as contractors, consultants, suppliers, or service providers for that business.

"Certified Firms" means firms possessing certifications recognized by the City of Chicago pursuant to MCC Chapter 2-92 or 49 CFR Parts 23 or 26. Specifically, MBEs, WBEs, BEPDs, VBEs, and DBEs.

1.1.3. Business Diversity Program Reports

Contractor must submit an annual report, in a form acceptable to the CPO, on July 1 of each year (or other date designated by the CPO) containing information about the Contractor's Business Diversity Program, if information is available. However, for Contracts awarded June 1 through July 1, the due date for the first annual report will be August 1, all subsequent reports will be due July 1. Information to be provided will include:

- Whether Contractor has a Business Diversity Program.
- Description of the Contractor's Business Diversity Program, if any.
- Information on expenditure of goods and services from minority-owned firms and women-owned firms during the prior calendar year, expressed in dollars and percentages, to the extent information is available. For reports due in 2021, information on expenditures in both 2019 and 2020 should be provided if available.
- For each year after the first year, information on progress or changes in the program in the prior year, if such information exists.

Reports shall be submitted to a City office or location anticipated to be identified by June 15, 2021.

1.1.4. Applicability

Contractor must submit the reports required by this Section 1.2 unless:

(A) Contractor is a Certified Firm; or

(B) The Contract is for professional consulting services of an individual who is either the majority owner of the Contractor or is him- or herself the contracting party as a sole proprietor; or

(C) The aggregate award value of all City contracts awarded to Contractor between May 31 of the prior year and May 31 of the current year is less than $100,000; or

(D) The CPO has otherwise notified the Contractor in writing that the requirement does not apply or that an exception will be made as outlined in Mayoral Executive Order 2021-2.

However, Contractors not required to report may report voluntarily.

EXHIBIT 4: ADDITIONAL CONTRACT PROVISIONS UNDER DEPARTMENT OF HOMELAND SECURITY ("DHS") URBAN AREA SECURITY INITIATIVE ("UASI") FUNDED ILLINOIS EMERGENCY MANAGEMENT AGENCY GRANT

Contractor acknowledges that the fees it will receive under the Contract may be federal grant funds that the City will obtain from the Illinois Emergency Management Agency ("IEMA") pursuant to a grant agreements between the City and IEMA, copies of which are attached as Exhibit 5 (the "Grant Agreement"). The funds derive from the Urban Area Security Initiative Grant Program of the DHS and from the Federal Emergency Management Agency ("FEMA"). In the event the City pays the Contractor for Services pursuant to Task Orders with funds the City receives pursuant to the Grant Agreement, the following acknowledgments and provisions are made part of this Contract:

A-1.1 CERTIFICATION REGARDING LOBBYING

In accordance with 31 USC 1352, Contractor certifies that no federal appropriated funds have been paid or will be paid, by or on behalf of Contractor, to any person for influencing or attempting to influence an officer or employee of any agency, a Member of Congress, an officer or employee of Congress, or any employee of a Member of Congress regarding the award of federal assistance or the extension continuation, renewal, or amendment, of federal assistance, or the extension, continuation, renewal, amendment, or modification of any federal assistance agreement.

If any funds, other than federal appropriated funds, have been paid or will be paid to any person for influencing or attempting to influence any of the above persons in connection with the Contract, the undersigned must also complete and submit federal form LLL, "Disclosure Form to Report Lobbying", in accordance with its instructions.

Contractor must include the language of this certification in any contracts with its Subcontractors. All Subcontractors are also subject to certification and disclosure.

This certification is a material representation of fact upon which reliance was placed to enter into this transaction and is a prerequisite for this transaction, pursuant to 31 U.S.C. Section 1352 (1989).

A-1.2 DEBARMENT, SUSPENSION, AND OTHER RESPONSIBILITY MATTERS

As required by Executive Order 12689 and 12549 its implementing regulations, as applicable, the Contractor certifies that it and its principals:

(i) are not presently debarred, suspended, proposed for debarment, declared ineligible, sentenced to a denial of federal benefits by a state or federal court, or voluntarily excluded from covered transactions by any federal department or agency;

(ii) have not within a three-year period preceding this application been convicted of or had a civil judgment rendered against them for commission of fraud or a criminal offense in

connection with obtaining, attempting to obtain, or performing a public (federal, state, or local) transaction or contract under a public transaction; violation of federal or state antitrust statutes or commission of embezzlement, theft, forgery, bribery, falsification or destruction of records, making false statements, or receiving stolen property;

(iii) are not presently indicted for or otherwise criminally or civilly charged by a governmental entity (federal, state, or local) with commission of any of the offenses enumerated in paragraph (1)(b) of this certification; and

(iv) have not within a three-year period preceding this application had one or more public transactions (federal, state, or local) terminated for cause or default.

If Contractor is unable to certify to any of the statements in this Section, Contractor must attach an explanation.

This certification is a material representation of fact upon which reliance was placed to enter into this transaction and is a prerequisite for this transaction.

A-1.3 DRUG FREE CERTIFICATION

Contractor shall comply with the federal Drug-Free Workplace Act of 1988, 41 USC §702 and the Illinois Drug Free Workplace Act (30 ILCS 580). The Illinois Drug Free Workplace Act requires that Contractor shall not be entitled to receive any monies hereunder unless Contractor has certified to the State of Illinois that Contractor will provide a drug free workplace. False certification or violation of the certification may result in sanctions including, but not limited to, suspension of contract or grant payments, termination of the agreement and debarment of contracting or grant opportunities with the State for at least one (1) year but not more than five (5) years. Contractor certifies and agrees that it will provide a drug free workplace by:

(a) Publishing a statement:

(1) Notifying employees that the unlawful manufacture, distribution, dispensing, possession or use of a controlled substance, including cannabis, is prohibited in the Contractor's workplace.

(2) Specifying the actions that will be taken against employees for violations of such prohibition.

(3) Notifying the employee that, as a condition of employment on such contract or grant, the employee will:

(A) abide by the terms of the statement, and

(B) notify the employer of any criminal drug statute conviction for a violation occurring in the workplace no later than five (5) days after such conviction.

(b) establishing a drug free awareness program to inform employees about:

(1) the dangers of drug abuse in the workplace;

(2) the Contractor's policy of maintaining a drug free workplace;

(3) any available drug counseling, rehabilitation, and employee assistance programs; and

(4) the penalties that may be imposed upon an employee for drug violations.

(c) Providing a copy of the statement required by subparagraph (s) to each employee engaged in the contract or grant and to post the statement in a prominent place in the workplace.

(d) Notifying the contracting or granting Agency within ten (10) days after receiving notice under part (B) of paragraph (3) of subsection (a) above from an employee or otherwise receiving actual notice of such conviction.

(e) Imposing a sanction on, or requiring the satisfactory participation in a drug abuse assistance or rehabilitation program by, any employee who is so convicted, as required by section 5 of the Drug Free Workplace Act.

(f) Assisting employees in selecting a course of action in the event drug counseling, treatment, and rehabilitation is required and indicating that a trained referral team is in place.

(g) making a good faith effort to continue to maintain a drug free workplace through implementation of the Drug Free Workplace Act.

A-1.4 INTELLECTUAL PROPERTY

A. Intangible Property

Pursuant to 2 CFR 200.315, Contractor agrees to the following provisions regarding intangible property
:

All rights to inventions and/or discoveries that arise or are developed, in the course of or under this Contract, shall belong to the City and be disposed of in accordance with City policy. The City, at its own discretion, may file for patents in connection with all rights to any such inventions and/or discoveries.

If this Contract results in any copyrightable material or inventions,, DHS and the State of Illinois reserve a royalty-free, nonexclusive,

and irrevocable license to reproduce, publish or otherwise use, for Federal Government purposes:
(i) The copyright in any work developed under a grant or contract; and (ii) Any rights of copyright to which a grantee or a contactor purchases ownership with grant support.

The following statement shall be prominently displayed in all publications created through this Contract to the extent such creation was financed with monies received by the City pursuant to the Grant Agreement: *"This document was prepared under a grant from the Federal Emergency Management Agency's Grant Program Directorate (FEMA/DPD) within the U.S. Department of Homeland Security. Points of view or opinions expressed in this document are those of the authors and do not necessarily represent the official position or policies of FEMA/GPD, the U.S. Department of Homeland Security or the State of Illinois."*

The City shall have a non-exclusive, irrevocable, royalty-free license to reproduce, publish, make derivative works of, or otherwise use, and allow others to do so for all government purposes, any copyright developed under this Contract.

B. Rights to Data

DHS, the State of Illinois and the City shall have unlimited rights or copyright license to any data first produced or delivered under this Contract.

A-1.5 NON-DISCRIMINATION

The Contractor shall not discriminate against any employee or applicant for employment because of race, color, religion, sex, national origin, ancestry, age, physical or mental handicap unrelated to ability, marital status, or unfavorable discharge from military service. The Contractor shall, to the extent applicable, comply with the following laws, and all associated rules and regulations:

> Executive Order 11246 of September 24, 1965, entitled "Equal Employment Opportunity," as amended by Executive Order 11375 of October 13, 1967, and as supplemented in Department of Labor regulations (41 CFR chapter 60); Title VI of the Civil Rights Act of 1964, as amended; Section 504 of the Rehabilitation Act of 1973, as amended; The Americans with Disabilities Act, 42 U.S.C. 1201 et seq.; Title IX of the Education Amendments of 1972; Department of Homeland Security Non-Discrimination Regulations, 44 C.F.R. Part 7; the Illinois Human Rights Act, 775 ILCS 5; The Public Works Employment Discrimination Act, 775 ILCS 10; Illinois Environmental Barriers Act, 410 ILCS 25; Age Discrimination Act of 1975; Executive Order No. 11478; and 43 Fed. Reg. 46501 (1978), and as supplemented by 41 C.F.R. 60.

A-1.6 REPORTING

Pursuant to 44 CFR 13.36(i)(7), Contractor shall comply with FEMA requirements and regulations pertaining to reporting, including but not limited to those set forth at 44 CFR 13.40-41.

A-1.7 RECORDS AND SITE VISITS

Pursuant to 2 CFR 200.334 and 2 CFR 200.337, Contractor shall maintain any books, documents, papers, and records of the Contractor that are directly pertinent to this Contract. At any time during normal business hours and as often as City deems necessary, Contractor shall permit City, DHS, the Comptroller General of United States, or any of their duly authorized representatives, and the State of Illinois to inspect and photocopy such records for the purpose of making audit, examination, excerpts, and transcriptions. Contractor must maintain all such books, documents, papers, and records for a period of three years after City makes final payment and all other pending matters are closed. Contractor acknowledges that, if applicable, it will comply with any and all reporting requirements under DHS/FEMA regulations.

Contractor's failure to maintain any books, records and supporting documents required by this Section will establish a presumption in favor of the City for the recovery of any funds paid under the Contract for which adequate books, records, and supporting documentation are not available to support their purported disbursement.

No provision in the Contract granting the City a right of access to records and documents impairs, limits or affects any right of access to such records and documents that the City would have had in the absence of such provisions.

A-1.8 COMPLIANCE WITH LAW AND REGULATIONS

Contractor must comply with all applicable provisions of DHS and FEMA regulations, and all state and local laws, ordinances and executive orders relating to the Contract, including, but not limited to: Provisions of 44 and 28 CFR applicable to grants and cooperative agreements, including Parts relating to Administrative Review Procedures and Nondiscrimination. All applicable standards, orders, or requirements issued under Section 306 of the Clean Air Act (42 U.S.C. 1 857(h), Section 508 of the Clean Water Act (33 U.S.C. 1368), Executive Order 11738, and Environmental Protection Agency regulations (40 CFR part 15); all mandatory standards and policies relating to energy efficiency that are contained in the Illinois energy conservation plan issued in compliance with the Energy Policy and Conservation Act (Pub. L. 94-163, 89 Stat. 871). Contractor certifies that its facilities are not listed and are not under consideration for listing on the U.S. Environmental Protection Agency's list of Violating Facilities.

A-1.9 REMEDIES

Pursuant to 44 CFR 13.36(i)(1), City is entitled to exercise all administrative, contractual, or other remedies permitted by law to enforce Contractor's compliance with the terms of this Contract, including but not limited to those remedies set forth at 44 CFR 13.43.

A-1.10 TERMINATION

Pursuant to 44 CFR 13.36(i)(2), City may terminate the Contract for cause or convenience in accordance with the procedures set forth in the Contract and those provided by 44 CFR 13.44.

A-1.11 SUBCONTRACTORS

Contractor must require all Subcontractors to comply with the obligations of this Exhibit by incorporating the terms and conditions in this Exhibit into all subcontracts.

A-1.12 MODIFICATION AND AMENDMENT OF THE GRANT

This Contract is subject to revision as follows:

Modifications to the Grant Agreements may be required because of changes in state or federal law or regulations as determined by the IEMA. Any such required modification must be incorporated into and will be part of this Contract, if applicable. IEMA will notify the City of any pending implementation of or proposed amendment to such regulations before a modification is made to the Contract. City will notify Contractor.

A-1.13 COMPLIANCE WITH TERMS OF GRANT

Notwithstanding anything in this Contract to the contrary, Contractor is subject to and must conform with all of the terms and conditions of the Grant Agreement as required by the Grant Agreement, which is attached as Exhibit 4 to this Contract and incorporated by reference as if fully set forth here. In the event of any conflict or inconsistency between the terms set forth in this Contract and the terms set forth in the Grant Agreement, the terms and provisions in the Grant Agreement take precedence over the terms and provisions in this Contract, except to the extent that this Contract contains provisions more favorable to the City, State of Illinois or federal government or onerous to Contractor. Contractor must not by action or omission cause the City to be in breach of the Grant Agreement.

A-1.14 Procurement of recovered materials.

Contractor must comply with section 6002 of the Solid Waste Disposal Act, as amended by the Resource Conservation and Recovery Act. The requirements of Section 6002 include procuring only items designated in guidelines of the Environmental Protection Agency (EPA) at 40 CFR part 247 that contain the highest percentage of recovered materials practicable, consistent with maintaining a satisfactory level of competition, where the purchase price of the item exceeds $10,000 or the value of the quantity acquired during the preceding fiscal year exceeded $10,000; procuring solid waste management services in a manner that maximizes energy and

resource recovery; and establishing an affirmative procurement program for procurement of recovered materials identified in the EPA guidelines.

A-1.15 Prohibition on certain telecommunications and video surveillance services or equipment.

Contractor acknowledges and agrees that the equipment, services, or systems provided under this Contract do not include covered telecommunications equipment or services as a substantial or essential component of any system, or as critical technology as part of any system, as prohibited by 2 CFR 200.216. As described in Public Law 115-232, section 889, covered telecommunications equipment is telecommunications equipment produced by Huawei Technologies Company or ZTE Corporation (or any subsidiary or affiliate of such entities).

(i) For the purpose of public safety, security of government facilities, physical security surveillance of critical infrastructure, and other national security purposes, video surveillance and telecommunications equipment produced by Hytera Communications Corporation, Hangzhou Hikvision Digital Technology Company, or Dahua Technology Company (or any subsidiary or affiliate of such entities).

(ii) Telecommunications or video surveillance services provided by such entities or using such equipment.

(iii) Telecommunications or video surveillance equipment or services produced or provided by an entity that the Secretary of Defense, in consultation with the Director of the National Intelligence or the Director of the Federal Bureau of Investigation, reasonably believes to be an entity owned or controlled by, or otherwise connected to, the government of a covered foreign country.

A-1.16 Domestic preferences for procurements.

Contractor and subcontractor agree to comply with 2 CFR 200.322, "Domestic Preference for Procurements." To the extent practicable in the performance of this contract, the Contractor and subcontractors are to use Manufactured Products that were produced in the United States as defined by that section.

EXHIBIT 5: GRANT AGREEMENTS

ILLINOIS EMERGENCY MANAGEMENT AGENCY

JD Prit1.kcr
Governor

Alicia Tate Nadeau
Dircctm

INTERGOVERNMENTALGRANT ADJUSTMENT NOTICE
BETWEEN
THE STATE OF ILLINOIS, ILLINOIS EMERGENCY MANAGEMENT AGENCY
AND
City of Chicago, OEMC
18UASICHGO- GAN #1

Changes/Additions in *italic* type:

The Illinois Emergency Management Agency (Grantor), with Its principal office at 2200 South Dirksen Parkway, Sprlngneld, Illinois 62703, and City of Chicago, OEMC (Grantee), with its principal office at 1411 West Madison St,Chicago IL 60607, hereby enter Into this Intergovernmental Grant Agreement (Agreement). Grantor and Grantee are collectively referred to herein as*Parties" or Individually as a "Party,N

ARTICLE I
AWARD AND GRANTEE-SPECIFIC INFORMATION AND CERTIFICATION

1,2. **Amount of Agreement.** Grant funds shall not exceed *$41,710,104.73.* Grantee agrees to accept Grantor's payment as specified In the Exhibits and attachments Incorporated herein as part of this Agreement

1.4. Is:rm- 111ls Agreement shall beeffective on October 1, 2018, and shall expire on *August 31, 2022,* unless terminated pursuant to this Agreement

1.6. **Signaruces.** In witness whereof. the Parties hereto have caused this Agreement to be executed by their duly authorized representatives.

Illinois Emergency Management Agency

Date: 29 Mau 2021

By: _____
Eric Lohrenz, Chief Legal Counsel

Date: 5-29-21

By: _____

Date: _____ *vi*

City **of Chicago, OEMC**

By: _____ **&,:J>**
RlchardCuidlce. e Director

Date: .> ... (0 - ,

18UASICHGO (Extend grantthrough 8/31/22)
(Increase grant by SJ00,000.00)

ILLINOIS EMERGENCY MANAGEMENT AGENCY
ERP OBLIGATION SHEET

FY: 2019

Internal Order No. 100417

Ce,ntractor: City of ChicaPo

Appropriation: 710-55840-1900-0200

Name: Alicia'fate-Nad(;ati

Contract Number: I8UASICHGO

Address: 1411 West Madison Street, Chicago, IL 60607-1809

DOC Code: .t/J./'1b

Phone: 312/746-9434

Product Category:

Cost Center: 588-40-40-ioo

Total Cost for Contract: $41,410,104.73

FEIN or S.S. NO. 36-6005820

Total Cost for FY:

Start Date: October I, 2018 Expiration: July I, 2020

Contract Jusiification

This grant is being provided from funds from the Federal Emergency Management Agency (FEMA), Federal Fiscal Year 20 I8 Homeland Security Grant Program (HSGP), CFDA 97.067.

The Grantee will utilize the Homeland Security Gram Program (HSGP) funding as outlined in the Grantee's FFY 2018 Grant Program Application. The l ISGP funds shall be used for costs related to the planning, organization, equipment, training, and exercise needs the prevent, protect against, mitigaie, respond to, and recover from acts of terrorism and other catastrophic events.

Peliverabl

Invoices for expenses incurred by this organization.

]. Is c0;1tr ct subject to bidding rquire111cnts: n/a

2. If subject to bidding requirement, was contract awarded to the low bidder? Ifno, explain: n/a

3. Who is Contract Manager: Bob Evans

6pprovals-(Refer To Contract Management Guide)

Originator (Date)

Section Head: 10-22-18 (Date)

Bureau Chief: 10/22/18 (Date)

Chief Financial Officer 10/22/18 (Date)

Legal Counsel 10/25/18 (Date)

INTERGOVERNMENTAL AGREEMENT

BETWEEN
THE STATE *OF* !LLINO!S, ILLINOIS EMERGENCY MANAGEMENT AGENCY
AND
City of Chicago

The lilinois Emergency Management Agency (Granter}, with its principal office at 2200.South Dirksen Parkway, Springfield, Illinois 62703, and City of Chicago (Grantee}, with its principal office at 1411 West Madison Street, **Chicago, Il!inois 60607-1809, hereby enter into this Intergovernmental Grant Agreement {Agreement). Grantor and Grantee are co!lectiv<:>ly referred to herein as "Parties" or individually as a "Party."**

PART ONE -THE UNIFORM TERMS
RECITALS

WHEREAS, it is the ir,tent of the Parties to perform consistent with all Exhibits and attachments hereto and pursuant to the duties and responsibilities imposed by Granter under the laws of the State of Illinois and in **accordance with the terms, ccnditions and provisions hereof.**

NOW, THEREFORE, in consideration of the foregoing and the mutual agreements contained herein, and **for other good and va!u2ble consideration, the value, receipt and sufficiency of which are acknowledged, the Partles hereto agree as fo!iows:**

ARTICLE I
AWARD AND GRA!\ITEE-SPECIFIC INFORMATION AND CERTIFICATION

1.1. DUNS Numb<er: SAM Registration: Nature of Entity. Under penalties of perjury, Grantee certifies that 13-505-6039 is Grantee's correct DUNS number, that 36-6005820 is Grantee's correct FEIN, and that Grantee **has an active State registrction and SAM registration. Grantee is doing business as a Government Unit. If Grantee has not iecelved a payment from the State of Illinois in the last two years, Grantee must submit a W-9 tax form with this Agreement.**

1.2. .I\maunt of Aereement. Grant Funds shall not exceed$ **41,410,104.73,** of which **$41,410,104.73** ere federai funds. Grantee agrees to accept Grantor's payment as specified in the Exhibits and attachments **!nccrp0rated herei:1 :-, p:irt of this Agreement.**

1.3. Identific:: \: g.r1 !'!umbers. The Federal Award Identification Number (FAIN} is EMW-2018-SS-00020, the Federal awarding agency is the United States Department of Homeland Security, and the Federal Award date is September 12, 2013. The Catalog of Federal Domestic Assistance (CFDA} Name is Homeland Security Grant Program and Number is 97.067. The Catalog of State Financial Assistance (CSFA} Number is 588-00-0455.

1.4. Term. This Agreement shall be effective on October 1, 2018, and shall expire on July 31, 2021, **unless terminated pursuant to this Agreement.**

1..5. Certification. Grantee certifies under oath that (1) all representations made in this Agreement are true and correct and (2) all Grant funds awarded pursuant to this Agreement shall be used only for the

purpose(s) described herein. Grantee acknowledges that the Award is made solely upon this certification and that **any false statementsT misrepresentations, or material omissions shall be the basis far immediate termination of** this Agreement and repayment of all Grant Funds.

1.6. Signatures. !n witness whereof, the Parties hereto have caused this Agreement to be executed by their duly authorized representatives.

IWNOIS EMERGENCY MANAGEMENT AGENCY

By: _____

William P. Robertson, Acting Director

Date: _____

By=1 _____

.!e e'r'L."'ilinson, General Counsel

Date: _____

By: _____

Brett Cox, Chief Fiscal Officer

Date: _____

City of Chicago

By: _____

Alicia Tate-Nadeau, Executive Director

Date: _____

By. _____

Signature of Designee

Prtnted Name: _____

Printed Tit!e: _____

purpose(s} described herein. Grantee acknowledges that the Award is made solely upon this certification andthat any falsestatements, misrepresentations, or material omissions shall be the basis for immediate termination of this Agreement and repayment of all Grant Funds.

1.6. Signatures. In witness whereof, the Parties hereto have caused this Agreement to be executed by their duly authorized representatives.

IWNOIS EMERGENCY MANAGEMENT AGENCY

By: _____
William P. Robertson, ActingDirector

Date: 25 OCT 18

By: _____
Jenifer L. Johnson, General Counsel

Date: 10/25/18

By: _____
Brett Cox, Chief Fiscal Officer

Date: 10/25/18

City of Chicago

By:c (Qi:cJ &tffi!A . ..
Alicia Tate-Nadeau, Executive Director

Date: /0 14 5"/ ['6

By '/Jlil--
Signature of Designee

Printed Name: _____

Printed Title: _____

ARTICLE II
REQUIRED REPRESENTATIONS

2.1. Standing and Authority. Grantee warrants that:

(a) Grantee is a governmental entity.

(b) Grantee has the requisite power and authority to execute and deliver this Agreement **and all documents to be executed by it in connection with this Agreement, to perform its obligations hereunder and to cons mmate the transactions contemplated hereby.**

(c) The execution and delivery of this Agreement, and the other documents to be executed by Grantee in connection with this Agreement, and the performance by Grantee of its obligations hereunder have been duly authorized by ail necessary entity action.

(d) This Agreement and all other documents related to this Agreement, including the Uniform Grant Application, the Exhibits and attachments to which Grantee is a party constitute the legal, valid and binding obligations of Grantee enforceable against Grantee in accordance with their respective **terms.**

2.2. Conl2.ll nce with Internal Revenue Code. Grantee certifies that it does and will comply with all provisions of the Federai !ntc,rnal Revenue Code (26 USC 1), the Illinois Income Tax Act (35 ILCS 5), and all rules promulgated thereunder, including withholding provisions and timely deposits of employee taxes and **unemployment insurance taxes.**

2.3. Compliance with Federal Funding Accountability and Transparency Act of 2006. Grantee certifies that **it** does and will coriply with the reporting requirements of the Federal Funding Accountability and Transparency Act of 2006 (P.L. 109-282) (FFATA) with respect to Federal Awards greater than or equal to $25,000. A FFATA sub-award report must be filed by the end of the month following the month in which the award was **made.**

2.4. Compliance with Uniform Grant Rules (2 CFR Part 200). Grantee certifies that it shall adhere to **the app!icable Uniform Administrative Requirements, Cost Principles, and Audit Requirements, which are** published in Title 2, Part 200 of the Code of Federal Regulations, and are incorporated herein by reference. *See* 44 Ill. Admin. Code 7000.30(b)(l)(A).

2.5. Compliance with Registration Requirements. Grantee and its sub-grantees shall: (i) be registered with the Federal SAM; (ii) be in good standing with the Illinois Secretary of State, if applicable; (iii) have a valid DUNS number; and (iv) have successfully completed the annual registration and prequalification through the Grantee Portal. It is Grantee's responsibility to remain current with these registrations and requirements. If **Grantee's status with regard to any of these requirements change, or the certifications made in and information** provided in the Uniform Grant Application changes, Grantee must notify the Grantor in accordance with ARTICLE **xvni.**

ARTICLE III
DEFINITIONS

3.1. Qefinitions. Capitalized words and phrases used in this Agreement have the following meanings:

"2 CFR Part 200" means the Uniform Administrative Requirements, Cost Princ.iples. and Audit Requirements for Federal Awards published in Title 2, Part 200 of the Code of Federal Reguiations.

"Agreement[1] or "Grant Agreement" has the same meaning as in 44111. Admin. Code-! Part 7000.

"Allocable Costs" means costs allocable to a particular cost objective if the goods or services involved are chargeable or assignable to such cost objective in accordance with relative benefits received or other equitable relationship. Costs allocable to a specific Program may not be shifted to other Programs in order to meet deficiencies caused by overruns or other fund considerations, to avoid restrictions imposed ay law or by the terms **of this Agreement, or for other reasons of convenience.**

"Allowable Costs" has the same meaning as in 44111. Admin. Code Part 7000.

"Award" has the same meaning as in 44 Ill. Admin. Code Part 7000.

"Budget" has the same meaning as in 44 Ill. Admin. Code Part 7000.

"CFDA" or "Catalog of Federal Domestic Assistance" has the same meaning as in 44 Ill. Admin. Code Part 7000.

"Close-out Report" means a report from the Grantee allowing the Grantor to determine whether all applicable administrative actions and required work have been completed, and therefore closeout actions can **commence.**

"Conflict of Interest" has the same meaning as in 44 Ill. Admin. Code Part 7000.

"Consolidated Year-End Financial Report" means a financial information presentation in which the assets, equity, liabilities, and operating accounts of an entity and its subsidiaries are combined (after eliminating all inter-entity transactions) and shown as belonging to a single reporting entity.

"Cost Allocation Plan" has the same meaning as in 44 ill. Admin. Code Part 7000.

"CSFA" or "Catalog of State Financial Assistance" has the same meaning as in 44 Ill. Admin. Code Part 7000.

"Direct Costs" has the same meaning as in 44 Ill. Admin. Code Part 7000.

"Disallowed Costs" has the same meaning as in 44 Ill. Admin. Code Part 7000.

"DUNS Number" means a unique nine-digit identification number provided by Dun & Brarlstreet for each physical location of Grantee's organization. Assignment of a DUNS Number is mandatory for all organizations seeking an Award from the State of Illinois.

"FAIN" means the Federal Award Identification Number.

"FFATA" or "Federal Funding Accountability and Transparency Act" has the same meaning as in 31 USC 6101; P.L. 110-252.

"Financial Assistance" has the same meaning as in 44 Ill. Admin. Code Part 7000.

"Fixed-Rate" has the same meaning as in 44 Ill. Admin. Code Part 7000. "Fixed-Rate" is in contrast to fee-for-service, 4 - II!. Admin. Code Part 7000.

"GAAP" or "Generally Accepted Accounting Principles" has the same meaning as in 44 Ill. Admin. Code Part 7000.

''Grar1t Funds" means the Financial P..ssistance made available to Grantee through this Agreement.

"indirect Costs" has the same meaning as in 44 Ill. Admin. Code Part 7000.

"Indirect Cost Rate" means a device for determining in a reasonable manner the proportion of indirect costs each Program should bear. It is a ratio (expressed as a percentage) of the Indirect Costs to a Direct Cost base. If reimbursement of Indirect Costs is allowable under an Award, Granter will not reimburse those Indirect Costs unless Grantee has estabiished an indirect Cost Rate covering the applicable activities and period of time, unless **Indirect Costs are reimbursed at a fixed rate.**

"Indirect Cost Rate Proposal" has the same meaning as in 44 Ill. Admin. Code Part 7000.

"NEt Revenue" means an entity's total revenue less its operating expenses, interest paid, depreciation, and taxes. "Net Revenue" is synonymous with "Profit."

"Nonprofit Organization" has the same meaning as in 44 Ill. Admin. Code Part 7000.

"Notice of Award" has the same meaning as in 44 Ill. Admin. Code Part 7000.

"OMB" has the same meaning as in 44 Ill. Admin. Code Part 7000.

"Prior Approval" has the same meaning as in 44 Ill. Admin. Code Part 7000.

Profit" means an entity's total revenue less its operating expenses, interest paid, depreciation, and taxes. "Profit" is Sfnonymous ,..vith "Net Revenue."

"Program" means the services to be provided pursuant to this Agreement.

"Program Costs" means all Allowable Costs incurred by Grantee and the value of the contributions made by third parties in accomplishing the objectives of the Award during the Term of this Agreement.

"Prngrzm Income'· has the same meaning as in 44 Ill. Admin. Code Part 7000.

"Related Parties" has the meaning set forth in Financial Accounting Standards Board (FASB) Accounting Standards Codificofon (ASC) 850-10-20.

"Sf,M" means t;,o federal System for Award Management (SAM); which is the Federal repository into **which an entity must provide information required for the conduct of business as a recipient. 2 CFR 25 Appendix A (:i.)(C)(l}.**

"State" means the State of Illinois.

"Term" has the meaning set forth in Paragraph 1.4.

"Unallowable Costs" has the same meaning as in 44 Iii. Admin. Code Part 7000.

ARTICLE IV
PAYMENT

4.1. Availability of Appropriation: Sufficiency of Funds. This Agreement is contingent upon and subject to the availability of sufficient funds. Grantor may terminate or suspend this Agreemer.t, in whole or in part, without penalty or further payment being required, if (i) sufficient funds fo:- this Azreement have not been appropriated or otherwise made available to the Granter by the State or the Federal fund;ng source, (ii) the **Governor or Granter reserves funds, or (iii) the Governor or Granter determines that funds will! not or may not be** available for payment. Grantor shall provide notice, in writing, to Grantee of any such funding failure and its **election to terminate or suspend this Agreement as soon as practicable. Any suspension or termination pursuant** to this Section will be effective upon the date of the written notice unless otherwise indicated.

4.2. Return of Grant Funds. Any Grant Funds remaining that are not expended or legally obligated by Grantee at the end of the Agreement period, or in the case of capital improvement Awards at the end of the time period Grant Funds are available for expenditure **or** obligation, shall be returned rn Grantor within forty-five (45) days. *See* 2 CFR 200.343(d); 2 CFR 200.305(b)(9); 30 ILCS 705/5.

4.3. Cash Management Improvement Act of 1990. Unless notified otherwise in ?II.RT *T't.1O* or PA I **THREE.** Federal funds received under this Agreement shall be managed in accordance with the Cash Management Improvement Act of 1990 (31 USC 6501 *et seq.)* and any other applicable Federal laws or regulations. See 2 CFR 200.305; 44 111. Admin. Code Part 7000.

4.4. Payments to Third Parties. Grantee agrees that Grantor shall have no liability to Grantee when Grantor acts in good faith to redirect all or a portion of any Grantee payment to a third party. Grantor will be deemed to have acted in good faith when it is in possession of information that indicates Grantee authcrized Granter to intercept or redirect payments to a third party or when so ordered by a court of competent jurisdiction.

4.5. Modifications to Estimated Amount. If the Agreement amount is established on an estimated **basis, then it may be increased by mutual agreement at any time during the Term. Granter may decrease the estimated amount of this Agreement at any time during the Term if (i) G; ntor believes Gr2.r,tee will not U$2 the** funds during the Term, (ii) Grantor believes Grantee has used funds in a manner that was not au\horized by this Agreement, (iii) sufficient funds for this Agreement have not been appropriated or otherwise made available to the Grantor by the State or the Federal funding source, (iv) the Governor or Grantor reserves funds, or (v) the **Governor or Granter determines that funds will or may not be available for payment. Grar.tee will be notified, in** writing, of any adjustment of the estimated amount of this Agreement. In the event of such reduction, services provided by Grantee under **Exhibit A** may be reduced accordingly. Grantee shall be paid for wo,k satisfactorily performed prior to the date of the notice regarding adjustment. 2 CFR 200.308.

4.6. Interest.

(a) All interest earned on Grant Funds held by a Grantee shail be treated in accordance with 2 CFR 200.305(b)(9), unless otherwise provided in **f.AR.:_TWO** or **PART** TflRf_. Any amount due sh;:il be remitted annually in accordance with 2 CFR 200.305(b)(9) or to the Grantor, as applicable.

{b) Grcmt Funds shall be placed in an insured account, whenever possible, that bears interest, unless exempted under 2 CFR Part 200.305(b)(8).

(c) A Grantee who ·,s required to reimburse Grant Funds pursuant to an action brought under the Illinois Grant Funds Recovery Act, and who enters into a deferred payment plan for the purpose of satisfying a past due debt, shall be required to pay interest on such debt as required by Section 10.2 of the Illinois State Collection Act of 1986. 30 ILCS 210; *See also* 30 ILCS 705/10.

4.7. Timely Billing Required. Grantee must submit any payment request to Grantor within thirty (30) days of the end of the quarter, unless another billing schedule is specified in **PART TWO. PART THREE** or **Exhibit C. Failure to submit such payment request timely will render the amounts billed an unallowable cost which Granto, cannot reimburse. In the event that Grantee is unable, for good cause, to submit its payment request timely, Grantee sha\l time!y notify Grnntor and may request an extension of time to submit the payment request.** Grantor's approval of Grantee's request for an extension shall not be unreasonably withheld.

4.8. Certification. Pursuant to 2 CFR 200.415, each invoice and report submitted by Grantee must contain the following certification by an official authorized to legally bind the Grantee:

> By signing this report [or payment request], I certify to the best of my knowledge and belief that the report [or payment request] is true, complete, **2nd accurate, and the expenditures, disbursements and cash receipts are for** the purposes and objectives set forth in the terms and conditions of the **Feder;,,] or State award. I am aware that any false, fictitious, or fraudulent information, or the omission of any material fact, may subject me to criminal, civil or administrative penalties for fraud, false statements, false claims or** otherwise. (U.S. Code Title 18, Section 1001and Title 31, Sections 3729-3730 and 3801-3812).

ARTICLEV
SCOPE OF GRANT ACTIVITIES/PURPOSE OF GRANT

5.1. Scape of Grant Activities/Purpose of Grant. Grantee **will** conduct the Grant Activities or provide the services as described in the Exhibits and attachments, including **Exhibit A** (Project Description) and **Exhibit B (De:iverabies), inc.otporated herein and in accordance with all terms and conditions set forth herein and all applicable admlnist:-atrve ru!es. In addition, the State's Notice of Award is incorporated herein by reference. All Grantor- pecific provisions and programmatic reporting required under this Agreement are described in PART TWO** (The Granter-Specific Terms). All Project-specific provisions and reporting required under this Agreement are **described in PARTTHr"tC£.**

5.2. Scope Revisions. Grantee shall obtain Prior Approval from Granter whenever a Scope revision is necessary for one or more of the reasons enumerated in 2 CFR 200.308. All requests for Scope revisions that **require Grantor approval shall be signed by Grantee's authorized representative and submitted to Granter for** approval. Expenditure *al* funds under a requested revision is prohibited and will not be reimbursed if expended before Grantor gives written approval. *See* 2 CFR 200.308.

5.3. ;'oecific Conditions. If applicable, specific conditions required after a risk assessment will be included in **Exhihit G.** Grantee shall adhere;,:. the specific conditions listed therein.

ARTICLE VI
BUDGET

6.1. Budget. The Budget is a schedule of anticipated grant expenditures that is approved by Grantor for carrying out the purposes of the Award. When Grantee or third parties support a portion of expenses associated with the Award, the Budget includes the non-Federal as well as the Federal share (and State share if applicable) of grant expenses. The Budget submitted by Grantee at application, or a revised Budget subsequently submitted and approved by Granter, is considered final and is incorporated herein as an at:achment.

6.2. Budget Revisions. Grantee shall obtain Prior Approval from Granter whenever a Budget revision is necessary for one or more of the reasons enumerated in 2 CFR 200.308. All requests for Budget revisions that require Granter approval shall be signed by Grantee's authorized representative and submitted to Granter for approval. Expenditure of funds under a requested revision is prohibited and will not be reimbursed if expended before Granter gives written approval. 2 CFR 200.308.

6.3. Discretionary Line Item Transfers. Unless prohibited from doing so in 2 CFR 200.308, transfers between approved line items may be made without Grantor's approval only if the total amount transferred does not exceed the allowable variance of the greater of either **(i)** ten percent (10%) of the Budget line item or (ii) one thousand dollars ($1,000) of the Budget line item. Discretionary line item transfers may not resuit in ar. increase to the Budget.

6.4. Non-discretionary Line Item Transfers. Total line item transfers exceeding the allowable variance of the greater of either **(i)** ten percent (10%) of the Budget line item or (ii) one thousand dol!ars ($1,000) of the Budget line item require Granter approval as set forth in Paragraph 6.2.

6.5. Notification. Within thirty (30) calendar days from the date of receipt of the request for Budget **revisions, Granter will review the request and notify Grantee whether the Budget revision has been approved,** denied, or the date upon which a decision will be reached.

ARTICLE VII
ALLOWABLE COSTS

7.1. Allowability of Costs; Cost Allocation Methods. The allowability of costs and cost allocation methods for work performed under this Agreement shall be determined in accordance with 2 CFR 200 Subpart E and Appendices 111, IV, and V.

7.2. Indirect Cost Rate Submission.

(a) All Grantees must make an Indirect Cost Rate election in the Grantee Portal, even grantees that do not charge or expect to charge Indirect Costs.

(b) A Grantee must submit an Indirect Cost Rate Proposal in accordance with federal regulations, in a format prescribed by Granter. For Grantees who have never negotiated an Indirect Cost Rate before, the Indirect Cost Rate Proposal must be submitted for approval no later than three months after the effective date of the Award. For Grantees who have previously negotiated an Indirect Cost Rate, the Indirect Cost Rate Proposal must be submitted for approval within 180 days of the Grantee's fiscal year end, as dictated in the applicable appendices, such as:

(i) Appendix V and VII to 2 CFR Part 200 governs Indirect Cost Rate Proposals for State and local governments,

(ii) Appendix Ill to 2 CFR Part 200 governs Indirect Cost Rate Proposals for public **and private institutions of higher education,**

(i;i) Appendix IV to 2 CFR Part 200 governs Indirect (F&A) Costs Identification and **,b.ssignment, and Rate Determination for Nonprofit Organizations, and**

(iv) Appendix V to Part 200 governs State/Local Government-wide Central Service Cost Allocaticn Plans.

(c) A Grantee who has a current, applicable rate negotiated by a cognizant Federal agency shall provide to Gran\or a copy of its Indirect Cost Rate acceptance letter from the Federal government and a coµy of the cos\ policy statement used to negotiate that rate. Granter will accept that Indirect Cost **Rate, up to any statutory, rule-based or programmatic limit.**

7.3. Tr rnsfer of Costs. Cost transfers betv..1een Grants, whether as a means to compensate for cost overruns or for other reasons, are una!lcwab!e. *See* 2 CFR 200.451.

7.4. Higher Educatio:, Cost Principles. The Federal cost principles that apply to public and private **In Ututions of higher education ,1re set forth in 2 CFR Part 200 Subpart E and Appendix Ill.**

7.5. Government Cost Principles. The Federal cost principles that apply to State, local and Federally-recognized Indian tribal governments are set forth in 2 CFR Part 200 Subpart E, Appendix V, and Appendix VII.

7.6. Financial Management Standards. The financial management systems of Grantee must meet the **fol:owing standards:**

{a} Accountlng System. Grantee organizations must have an accounting system that provides accurate, current, and compiete disclosure of all financial transactions related to each State- and i-:ederally-funded Program. Accounting records must contain information pertaining to State and Federal pass-through av1ards, authorizations, obligations, unobligated balances, assets, outlays, and income. These records must be maintained on a currE:nt basis and balanced at least quarterly. Cash contributions to the Program from third parties must be accounted for in the general ledger with other Grant Funds. Third party in-kind (non-cash) contributions are not required to be recorded in the general ledger, but must be under accounting control, possibly through the use of a memorandum ledger. *See* 2 CFR 200.302.

(b) **Source Documentation.** Accounting records must be supported by such source **documentation as canceled checks, bank statements, invoices, paid bills, donor letters, time and attendance records, activity reports, travel reports, contractual and consultant agreements, and subaward dccumen' 2tion. All supporting documentation should be clearly identified with the Award and general ledger accounts which are to be charged or credited.**

(i) The documentation standards for salary charges to grants are prescribed by 2 CFR 200.430, and in the cost principles applicable to the entity's organization (Paragraphs 7.4 through 7.5).

(ii) If records do not meet the standards in 2 CFR 200.430, then Granter may notify Gran\oe :n PART TWO, PART THREE or Exhibit G of the requirement to submit Personnel activity reports. *See* 2 CFR 200.430(ij(8). Personnel activity reports shall account on an after-the-fact basis for one hundred percent (100%) of the employee's actual time, separately indicating the

time spent on the grant, other grants or projects, vacation or sick leave, and administrative time, if applicable. The reports must be signed by the employee, approved by the appropriate official, and coincide with a pay period. These time records should be used to record the distribution of salary costs to the appropriate accounts no less frequently than quarterly.

(iii) Formal agreements with independent contractors, such as consultants, must include a description of the services to be performed, the period of performance, the fee and method of payment, an itemization of travel and other costs which are chargeable to the agreement, and the signatures of both the contractor and an appropri<lte offici3l of Grantee.

(iv) If third party in-kind (non-cash) contributions are used for Grant purposes, the valuation of these contributions must be supported with adequate documentation.

(c) **Internal Control.** Effective control and accountability must be maintained for all cash, real and personal property, and other assets. Grantee must adequately safeguard all such property and must provide assurance that it is used solely for ai.Jthorized purposes. Grantee mu':.t also have systems in place that provide reasonable assurance that the information is accurate, allowable, and compliant with the terms and conditions of this Agreement. 2 CFR 200.303.

(d) **Budget Control.** Records of expenditures must be maintained for each Award by the cost categories of the approved Budget (including indirect costs that are chc1iged to the Award), and actual expenditures are to be compared with Budgeted amounts at least quarterly.

(e) **Cash Management.** Requests for advance payment shall be limited to Grantee's immediate cash needs. Grantee must have written procedures to minimize the time elopslng between the receipt and the disbursement of Grant Funds to avoid having excess funds on hand. 2 CFR 200.305.

7.7. Federal Requirements. All Awards, whether funded in whole or in part with either Federal or State funds, are subject to Federal requirements and regulations, including but not limited to 2 CFR Part 200, 44 Ill. Admin. Code 7000.30(b) and the Financial Management Standards in Paragraph 7.6.

7.8. Profits. It is not permitted for any person or entity to earn a Profit from n Award *See/ e.g.,* 2 CFR 200.400(g); *see also* 30 ILCS 708/60(a)(7).

7.9. Management of Program Income. Grantee is encouraged to earn income to defray prograrr. costs where appropriate, subject to 2 CFR 200.307.

ARTICLE VIII
REQUIRED CERTIFICATIONS

8.1. Certifications. Grantee shall be responsible for compliance with the enumerated certifications to the extent that the certifications apply to Grantee.

(a) **Bribery.** Grantee certifies that it has not been convicted of bribery or attempting to bribe an officer or employee of the State of Illinois, nor made ar. admission of guilt of such conduct which is a matter of record (30 ILCS 500/50-5).

(b) **Bid Rigging.** Grantee certifies that it has not been barred from contracting with a unit of State or local government as a result of a violation of Paragraph 33E-3 or 33E-4 of the Criminal Code of 1961(720 ILCS 5/33E-3 or 720 ILCS 5/33E-4, respectively).

(c) **Debt to State.** Grantee certifies that neither it, nor its affiliate(s), is/are barred from receiving an Award because Grantee, or its affiliate(s), is/are delinquent in the payment of any debt to the State, unless Grantee, or its affiliate(s), has/have entered into a deferred payment plan to pay off the debt, and Grantee acknowledges Granter may declare the Agreement void if the certification is false (30 ILCS 500/50-11).

(d) Educational loan. Grantee certifies that it is not barred from receiving State agreements as a result of default on an educational loan (5 ILCS 385/1*et seq.).*

(e) Internatiom;l Boycott. Grantee certifies that neither it nor any substantially owned affiliated company is participating or shall participate in an international boycott in violation of the provision of the U.S. Export Administration Act of 1979 (SO USC Appendix 2401*et seq.)* or the regulations of the U.S. Department of Commerce promulgated under that Act (15 CFR Parts 730 through 774).

(f) Dues and Fees. Grantee certifies that it is not prohibited from receiving an Award because it pays dues or fees on behalf of its employees or agents, or subsidizes or otherwise reimburses them for payment of their dues or fees to any club which unlawfully discriminates (775 ILCS 25/1*et seq.).*

(g) **Pro-Children Act.** Grantee certifies that it is in compliance with the Pro-Children Act of 2001in that it prohibits smoking in any portion of its facility used for the provision of health, day care, **early childhood development services, education or library services to children under the age of eighteen** (18), which services are supported by Federal or State government assistance (except such portions of the facilities which are used for inpatient substance abuse treatment) (20 USC 7181-7184).

(h) **Drug-Free Work Place.** If Grantee is not an individual, Grantee certifies it **will** provide a drug free workplace pursuant to the Drug Free Workplace Act. 30 ILCS 580/3. If Grantee is an individual and this Agreement is valued at more than $5,000, Grantee certifies it shall not engage in the unlawful **manufacture, distribution, dispensation, possession, or use of a controlled substance during the** performance of the Agreement. 30 ILCS 580/4. Grantee further certifies that it is in compliance with the government-wide requirements for a drug-free workplace as set forth in 41 USC 8102.

(i) Motor Voter L w. Grantee certifies that it is in full compliance with the terms and provisions of the National Voter Registration Act of 1993 (52 USC 20501*et seq.).*

(j) **Clean Air Act and Clean Water Act.** Grantee certifies that it is in compliance with all applicable standards, order or regulations issued pursuant to the Clean Air Act (42 USC §7401*et seq.)* and the Federal Water Pollution Control Act, as amended (33 USC 1251*et seq.).*

(k) **Debarment.** Grantee certifies that it is not debarred, suspended, proposed for debarment, declared ineligible, or voluntarily excluded from participation in this Agreement by any Fede;ai department or agency 2 CFR 200.205(a), or by the State (See 30 ILCS 708/25(6)(G)).

(l) **Non-procurement Debarment and Suspension. Grantee certifies that** it is **in compliance** with Subpart C of 2 CFR Part 180 as supplemented by 2 CFR Part 376, Subpart C.

(m) Grant for the Construction of Fixed Works. Grantee certifies that all Programs for the construction of fixed works which are financed in whole or in part with funds provided by this Agreement shall be subject to the Prevailing Wage Act (820 ILCS 130/0.01 *et seq.)* unless the provisions of that Act exempt its applicstion. In the construction of the Program, Grantee shall comply with the requirements of

the Prevailing Wage Act including, but not limited to, inserting into all contracts for such construction a stipulation to the effect that not less than the prevailing rate of wages as applicable to the Program shall be paid to all laborers, workers, and mechanics performing work under the Award ar.d requiring all bonds **of contractors to include a provision as will guarantee the faithfu! perforrn.:\m:e of --;uch prev2ilino5 wagE clause as provided by contract.**

(n) **Health Insurance Portability and Accountability Act.** Grantee certifies that it is in compliance with the Health Insurance Portability and Accountability Act of 1996 (HIPAA), Public Law No. 104-191, 45 CFR Parts 160, 162 and 164, and the Social Security Act, 42 USC 1320d-2 through 1320d-7, in that it may not use or disclose protected health information other than as permitted or required hy law and agrees to use appropriate safeguards to prevent use or disclosure of the protected health information. Grantee shall maintain, for a minimum of six (6) years, all protected health information.

(o) Criminal Convictions. Grantee certifies that neither it nor any manager!al agent of Grantee has been convicted of a felony under the Sarbanes-Oxley Act of 2002, nor a Class 3 or Class 2 felony under Illinois Securities Law of 1953, or that at least five (5) years have passed since the date of the conviction. Grantee further certifies that it is not barred from receiving an Award under 30 ILCS 500/50-10.5, and acknowledges that Grantor shall declare the Agreement void if this certification is false (30 ILCS 500/50-10.5).

(p) **Forced Labor Act.** Grantee certifies that it complies with the State Prohibition of Goods from Forced Labor Act, and certifies that no foreign-made equipment, materials, or supplies furnished to the State under this Agreement have been or **will** be produced in whole or in part by forced labor, convict labor, or indentured labor under penal sanction (30 ILCS 583).

(q) **Illinois Use Tax.** Grantee certifies in accordance with 30 ILCS 500/50-12 that it is not barred from receiving an Award under this Paragraph. Grantee acknowledges that this Agreement may be declared void if this certification is false.

(r) Environmental Protection Act Violations. Grantee certifles in accordance w!th 30 ILCS 500/50-14 that it is not barred from receiving an Award under this Paragraph. Grantee ac,nowledges that this Agreement may be declared void if this certification is false.

(s) **Goods from Child Labor Act.** Grantee certifies that no foreign-made equipment, materials, or supplies furnished to the State under this Agreement have been produced in whole or in part by the labor of any child under the age of twelve (12) (30 ILCS 584).

(t) **Federal Funding Accountability and Transparency Act of 2006.** Grantee certifies that it is in compliance with the terms and requirements of 31 USC 6101.

ARTICLE IX
CRIMINAL DISCLOSURE

9.1. Mandatory Criminal Disclosures. Grantee shall continue to disclose to Granter all violations of criminal law involving fraud, bribery or gratuity violations potentially affecting this Award. *See* 30 ILCS 708/40. Additionally, if Grantee receives over $10 million in total Financial Assistance, funded by either State or Federal funds, during the period of this Award, Grantee must maintain the currency of information reported to SAM

regarding civil, criminal or administrative proceedings as required by 2 CFR 200.113 and Appendix XII of 2 CFR Part 200, and 30 ILCS 708/40.

ARTICLEX
UNLAWFUL DISCRIMINATION

10.1. Compliance with Nondiscrimination Laws. Both Parties, their employees and subcontractors under subcontract made pursuant to this Agreement, remain compliant with all applicable provisions of State and **Federal la·;,;s and regulations pertaining to r.ondiscrimination, sexual harassment and equal employment** opportunity including, but not limited to, the following laws and regulations and all subsequent amendments thereto:

(a} The Illinois Human Rights Act (775 ILCS 5/1-101 *et* seq.), including, without limitation, **44** Ill. Admin. Code Part 750, which is incorporated herein;

(b) The Public Works Employment Discrimination Act (775 ILCS 10/1*et* seq.);

(c} The United States Civil Rights Act of 1964 (as amended} (42 USC 2000a- and 2000h-6). (See *also* guidelines t Federal Financial Assistance Recipients Regarding Title VI Prohibition Against National Origin Discrimination Affecting Limited English Proficient Persons [Federal Register: February 18, 2002 (Volume 67, Number 13, Pages 2671-2685)]);

(d} Section 504 of the Rehabilitation Act of 1973 (29 USC 794);

(e} The Americans with Disabilities Act of 1990 (as amended) (42 USC 12101 et *seq.);* and

(f) The Age Discrimination Act (42 USC 6101*et* seq.).

ARTICLE XI
LOBBYING

11.1. Imprnoer Influence. Grantee certifies that no Grant Funds have been paid or will be paid by or on behalf of Grantee to any person for influencing or attempting to influence an officer or employee of any government agency, a member of Congress or Illinois General Assembly, an officer or employee of Congress or Illinois General Assembly, or an employee of a member of Congress or Illinois General Assembly in connection with the awarding of any agreement, the making of any grant, the making of any loan, the entering into of any **cooperative agreement, 0r the extension, continuation, renewal, amendment or modification of any agreement,** grant, loan or cooperative agreement. 31 USC 1352. Additionally, Grantee certifies that it has filed the required certification under the Syrd Anti-Lobbying Amendment (31 USC 1352), if applicable.

11.2. Federal Form ht!,. If any funds, other than Federally-appropriated funds, were paid or will be paid **to any person for Influendng or Jttempting to influence any of the above persons in connection with this** Agreement, the undersigned must also CO'Tlplete and submit Federal Form LLL, Disclosure of Lobbying Activities **Form, in accordonce with its instructions.**

11.3. Lobbying Costs. Grantee certifies that it is in compliance with the restrictions on lobbying set forth in 2 CFR Part 200.450. For any Indirect Costs associated with this Agreement, total lobbying costs shall be separately identified in the Program Budget, and thereafter treated as other Una!lowable Costs.

11.4. Procurement Lobbying. Grantee warrants and certifies that it and, to the best of its knowledge, its sub-grantees have complied and will comply with Executive Order No. 1 (2007)-(EO 1-2007). EO 1-2007 generally prohibits Grantees and subcontractors from hiring the then-serving Governor's fami!y members to lobby **procurement activities of the State, or any other unit of government in Illinois including l0cal governments, if that** procurement may result in a contract valued at over $25,000. This prohibition also applies to hiring for that same purpose any former State employee who had procurement authority at any time during the one-year period preceding the procurement lobbying activity.

11.5. Subawards. Grantee must include the language of this ARTICLE XI in the award documents for any subawards made pursuant to this Award at all tiers. All sub-awardees are also subject to certification and disclosure. Pursuant to Appendix 11(1) to 2 CFR Part 200, Grantee shall forward all disclosures by contractors **regarding this certification to Granter.**

11.6. Certification. This certification is a material representation of fact upon which reliance was placed to enter into this transaction and is a prerequisite for this transaction, pursuant to 31 USC 1352. Any person who fails to file the required certifications shall be subject to a civil penalty of not less than $10,000, and not more than $100,000, for each such failure.

ARTICLE XII
MAINTENANCE AND ACCESSIBILITY OF RECORDS; MON!TORING

12.1. Records Retention. Grantee shall maintain for three (3) years from the date c,f submission of the **final expenditure report, adequate books, all financial records and, supporting documents, statisticai records, and** all other records pertinent to this Award, adequate to comply with 2 CFR 200.333, unless a different retention period is specified in 2 CFR 200.333. If any litigation, claim or audit is started before the expiration of the retention period, the records must be retained until all litigation, claims or audit exceptions involving the records have been resolved and final action taken.

12.2. Accessibility of Records. Grantee, in compliance with 2 CFR 200.336, shall make books, records, related papers, supporting documentation and personnel relevant to this Agreement available to authorized **Granter representatives, the Illinois Auditor General, Illinois Attorney General, any Exi::cutive Inspector General,** the Grantor's Inspector General, Federal authorities, any person identified in 2 CFR 200.336, and any other person as may be authorized by Grantor (including auditors), by the State of Illinois or by Federal statute. Grantee shall cooperate fully in any such audit or inquiry.

12.3. Failure to Maintain Books and Records. Failure to maintain books, records and supporting documentation, as described in this ARTICLE XII, shall establish a presumption in favor of the State for the recovery of any funds paid by the State under this Agreement for which adequate books, records and supporting documentation are not available to support disbursement.

12.4. Monitoring and Access to Information. Grantee must monitor its activities to assure compliance with applicable State and Federal requirements and to assure its performance expectations are being achieved. **Granter shall monitor the activities of Grantee to assure compliance with a!I requirements and performance** expectations of the award. Grantee shall timely submit all financial and performance reports, and shall supply,

upon Grantor's request, documents and information relevant to the Award. Granter may make site visits as warranted by program needs. *See* 2 CFR 200.328 and 200.331. Additional monitoring requirements may be in **?ART TV.JO or PART THREE.**

ARTICLE XIII
FINANCIAL REPORTING REQUIREMENTS

13.1. Reg:;ired Periodic Financial Reports. Grantee agrees to submit financial reports as requested and in the format required by Granter. Grantee shall file quarterly reports with Granter describing the expenditure(s) **of the funds related thereto, unless more frequent reporting is required by the Grantee pursuant to specific award** cor,ditions. 2 GR 200.207. The first of such reports shall cover the first three months after the Award begins. Quarterly repo,ts must be submitted no later than 30 calendar days following the three-month period covered by the report. Additional information regarding required financial reports may be set forth in **Exhibit G.** Failure to submit the required financial reports may cause a deia'{ or suspension of funding. 30 ILCS 705/1*et seq.;* 2 CFR 207(b)(3) and 200.327.

13.2. Close-out Report.:.

(a) Grantee shall submit a Close-out Report within 60 calendar days following the end of the period of performance for this Agreement. In the event that this Agreement is terminated prior to the end of the Term, Grantee shall submit a Close-out Report within 60 calendar days of such termination. The format of this Close-out Report shail follow a format prescribed by Granter. 2 CFR 200.343.

(b) If an audit or review of Grantee occurs and results in adjustments after Grantee submits a Clcse-out Report, Grantee will submit a new Close-out Report based on audit adjustments, and immediateiv sub,n;t a refund to Granter, if applicable. 2 CFR 200.344.

13.3. Consolidated Year-End Financial Reports.

(a) This Paragraph 13.3 applies to all Grantees, unless exempted by **PART TWO** or **PART** THRcE.

(b) Grantees shall submit Consolidated Year-End Financial Reports, according to the **required audlt (see ARTICLE XV), namely:**

(i) For Grantees required to conduct a single audit (or program-specific audit), within the ear!iN of (a) 9 months after the Grantee's fiscal year ending on or after June 30, or (b) **30 calender dr.1ys following complet!on of the audit; or**

(ii) For Grantees required to conduct a Financial Statement Audit or for Grantees not required to perform an audit, within 180 days after the Grantee's fiscal year ending on or **after June 30.**

These deadlines may be extended at the discretion of the Granto,, but only for rare and unusual **circumstances such as a natural disaster.**

(c) The Consolidated Year-End Financial Report must cover the same period the Audited **Financial St,:1tements cover. If no Audited Financial Statements are required, however, then the Consolidated Year-End Financial Report must cover the samt;! period as the Grantee's tax return.**

(d) Consolidated Year-End Financial Reports must include an in relation to opinion from the report issuer on the financial statements included in the Consolidated Year-End Financial Report.

(e) Consolidated Year-End Financial Reports shall follow a format prescribed by Granter.

(f) Notwithstanding anything herein to the contrary, when such reports or statements required under this section are prepared by the Illinois Auditor General, if they are not available by the above-specified due date, they will be provided to Grantor within thirty (30) days of becoming a·1ailable.

13.4. Effect of Failure to Comply. Failure to comply with reporting r quirements si1all iesult in the? withholding of funds, the return of improper payments or Unallowable Costs, will be considered a material breach of this Agreement and may be the basis to recover Grant Funds. Grantee's failure to comply with this ARTICLE XIII, ARTICLE XIV, or ARTICLE XV shall be considered prima facie evidence of a breach and may be admitted as such, without further proof, into evidence in an administrative proceeding before Grantor, or in any other legal proceeding. Grantee should refer to the State of Illinois Grantee Compliance Enforcement System for poiicy and consequences for failure to comply.

ARTICLE XIV
PERFORMANCE REPORTING REQU:REMENTS

14.1. Required Periodic Performance Reports. Grantee agrees to submit Perform2nce Reports as requested and in the format required by Grantor. Performance Measures listed in **j:xhibit** E must be reported quarterly, unless otherwise specified in PART TWO or PART THREE. Unless so specified, the first of such reports shall cover the first three months after the Award begins. If Grantee is not required to report performance quarterly, then Grantee must submit a Performance Report at least annually. Pursuant to 2 CFR 200.207, specific conditions may be imposed requiring Grantee to report more frequently based on the risk assessment or the merit based review of the application. In such cases, Grantor shall notify Grantee of same in **Exhibit G.** Pursuant to 2 CFR 200.328, periodic Performance Reports shall be submitted no later than 30 calendar days following the period covered by the report. For certain construction-related Awards, such reports may be exempted as identified in **PART TWO** or **PART THREE.** 2 CFR 200.328. Failure to submit such required Performance Reports may cause a delay or suspension of funding. 30 ILCS 705/1*et seq.*

14.2. Close-out Performance Reports. Grantee agrees to submit a Close-out Performance Report, in the format required by Grantor, within 60 calendar days foilowing the end of the period of erformance. *See* 2 CFR 200.343.

14.3. Content of Performance Reports. Pursuant to 2 CFR 200.328(b)(2) all Performance Reports must include Program qualitative and quantitative information, including a comparison of actual accomplishments to the objectives of the award established for the period; where the accomplishments can be quantified, a computation of the cost if required; performance trend data and analysis if required; and reasons why established goals were not met, if appropriate. Appendices may be used to include additionai supportive documentation. Additional content and format guidelines for the Performance Reports will be determined by Grantor contingec:t on the Award's statutory, regulatory and administrative requirements, and are induded in **PART TWO or PART THREE** of this Agreement.

14.4. Performance Standards. Grantee shall perform in accordance with the Performance Standards set forth in **Exhibit F**. *See* 2 CFR 200.301 and 200.210.

ARTICLE XV
AUDIT REQUIREMENTS

15.1. Audits. Grantee shall be subject to the audit requirements contained in the Single Audit Act Amendments of 1996 (31 USC 7501-7507) and Subpart F of 2 CFR Part 200, and the audit rules set forth by the Governor's Office of Management and Budget. *See* 30 ILCS 708/65(c).

15.2. Audit Requirements.

(a) Ingle and Program-Specific Audits. If, during its fiscal year, Grantee expends $750,000 **or more In r-ederal Awards (direct federal and federal pass-through awards combined), Grantee must** have a single audit or prcgram-specific audit conducted for that year as required by 2 CFR 200.501 and other applicable sections of Subpart F of 2 CFR Part 200. The audit and reporting package (including data collection form and management letters) must be completed as described in 2 CFR 200.512 (single audit) or 2 CFR 200.507 (program-specific audit). The audit (and package) must be submitted to Grantor within the earlier of (i) 30 calendar days after receipt of the auditor's report(s) or (ii) nine (9) months after the **end of the Grantee's audit period.**

(b) Financial Statement Audit. If, during its fiscal year, Grantee expends less than $750,000 in Federal Awarcis, Grantee is subject to the following audit requirements:

(i) !f, during its fiscal year, Grantee expends $300,000 or more in Federal and State **Awards, singuiur!y or in any combination, Grantee must have a financial statement audit** conducted in accordance with the Generally Accepted Government Auditing Standards (GAGAS). Grantee may be subject to additional requirements in **PART TWO. PART THREE** or **Exhibit G** based on the Grantee's risk profile.

(ii) If, during its fiscal year, Grantee expends less than $300,000 in Federal and State Awards, but the total revenue it receives is in excess of $300,000, Grantee must have a financial statement audit conducted in accordance with the Generally Accepted Auditing Standards (GAAS).

(iii) Grantee must submit its financial statement audit report(s) and any Management letters issued by t:,e auditor within the earlier of (i) 30 calendar days after receipt of the auditor's report(s) or (ii) 180 days after the end of the Grantee's audit period.

15.3. Perfo mance cf Audits. For those organizations required to submit an independent audit report, the audit is to be conducted by the Illinois Auditor General, or a Certified Public Accountant or Certified Public Accounting Firm licensed in the State of Illinois or in accordance with Section 5.2 of the Illinois Public Accounting Act (225 ILCS 450/5.2). For audits required to be performed subject to Generally Accepted Government Auditing **Stc'l'ldards, Grantee shall request and maintain on file a copy of the auditor's most recent peer review report and** acceptance letter. Grantee shall follow procedures prescribed by Granter for the preparation and submission of audit reports and any related documents.

15.4. Report TimiQg. Notwithstanding anything herein to the contrary, when such reports or statements iequirerl u:1der this section are prepared by the Illlnois Auditor General, if they are not available by the above-specified due date, they will be provided to Granter within thirty (30) days of becoming available.

Otherwise, Grantee should refer to the State of Illinois Grantee Compliance Enforcement System for policy and **consequences for late reporting.**

ARTICLE XVI
TERMINATION; SUSPENSION; NON-COMPLIANCE

16.1. Termination.

(a) This Agreement may be terminated, in whole or in part, by either Party for any or no reason upon thirty (30) calendar days' prior written notice tc the other Party. If terminated by the **Grantee, Grantee must include the reasons for such termination, the effective date, and, in the case of a** partial termination, the portion to be terminated. If Grantor determines in the case of a partial termination that the reduced or modified portion of the Award will not accomplish the purposes for which the Award was made, Grantor may terminate the Agreement in its entirety. 2 CFR 200.339(a)(4).

(b) This Agreement may be terminated, in whole or in part, by Grantor without advance **notice:**

(i) Pursuant to a funding failure under Paragraph 4.1;

(ii) If Grantee fails to comply with the terms and conditions of this or any Award, **application or proposal, including any applicable ru!es or regulations, or has made a false representation in connection with the receipt of this or any Grant;**

(iii) For cause, which may render the Grantee ineligible for consideration for future grants from the Grantor or other State agencies; or

(iv) If Grantee breaches this Agreement and either (1) fails to cure such breach within 15 calendar days' written notice thereof, or (2) if such cure would require longer than 15 calendar days and the Grantee has failed to commence such cure within 15 calendar days' **written notice thereof. In the event that Granter terminates this Agreer1ent as a resuft of the** breach of the Agreement by Grantee, Grantee shall be paid for work satisfactorily performed prior to the date of termination.

16.2. Suspension. Granter may suspend this Agreement, in whole or in part, pursuant to a fonding failure under Paragraph 4.1 or if the Grantee fails to comply with terms and conditions of this or any Award. If suspension is due to Grantee's failure to comply, Grantor may withhold further payment and prohibit Grantee from incurring additional obligations pending corrective action by Grantee or a decision to terminate this Agreement by Grantor. Grantor may determine to allow necessary and proper costs that Grantee could not reasonably avoid during the period of suspension.

16.3. Non-compliance. If Grantee fails to comply with applicable statutes, regulations or the terms and **conditions of this or any Award, Grantor may impose additional conditions on Grantee-, as described in 2 C:=R** 200.207. If Grantor determines that non-compliance cannot be remedied by imposing additional conditions, Grantor may take one or more of the actions described in 2 CFR 200.338. The Parties shall follow all Grantor **policies and procedures regarding non-compliance, including, but not limited to, the procedL!res set forth in the** State of Illinois Grantee Compliance Enforcement System.

16.4. Objection. If Grantor suspends or terminates this Agreement, in whole or in part, for cause, or **takes any other action in response to Grantee's non-compliance, Grantee may avail itself of any opportunities to object and challenge such suspension, termination or other action by Granter in accordance with any applicable processes and procedures, including, but not limited to, the procedures set forth in the State of Illinois Grantee** Compliance Enforcement System. 2 CFR 200.341.

16.5. **Effects of Susoension and Termination.**

(a) Grantor may credit Grantee for expenditures incurred in the performance of authorized **services under this Agreement prior to the effective date of a suspension or termination.**

(b) Grantee shall not incur any costs or obligations that require the use of these Grant Funds after the effective date of a suspension or termination, and shall cancel as many outstanding obligations as possible.

(c) Costs to Grantee resulting from obligations incurred by Grantee during a suspension or after termination of the Agreement are not allowable unless:

{i} Granter e}:pressly authorizes them in the notice of suspension or termination; and

(ii) The costs result from obligations properly incurred before the effective date of **suspE.ns:on or termination, are not in anticipation of the suspension or termination, and the costs** would be allowable if the Agreement was not suspended or terminated. 2 CFR 200.342.

16.6. Close-out of Terminated Agreements. If this Agreement is terminated, in whole or in part, the Parties shall comply with all close-out and post-termination requirements of this Agreement. 2 CFR 200.339(c).

ARTiCLE XVII
SUBCONTRACTS/SUB-GRANTS

17.1. Sub-recipients/Delegation. Grantee may not subcontract nor sub-grant any portion of this Agreement no; delegate any duties hereunder without Prior Approval of Grantor. The requirement for Prior **Approval is s;:-i.tisfied if the sub ontractor or sub-grantee has been identified in the Uniform Grant Application, such as, vvlthout limitation, a Project Description, and Granter has approved.**

17.2. f\12..'l)ication ofTerrns. Grantee shall advise any sub-grantee of funds awarded through this **Agreement of the requirements imposed on them by Federal and State laws and regulations, and the provisions of this Agreement.**

ARTICLE XVIII
NOTICE OF CHANGE

18.1. Notice of Change. Grantee shall notify the Grantor if there is a change in Grantee's legal status, Federal employer identification number (FEIN), DUNS number, SAM registration status, Related Parties, or address. *See* 30 ILCS 708/60(a). if the change is anticipated, Grantee shall give thirty (30) days' prior written notice to

Grantor. If the change is unanticipated, Grantee shall give notice as soon as practicable thereafter. Granter reserves the right to take any and all appropriate action as a result of such change(s).

18.2. Failure to Provide Notification. To the extent permitted by Illinois law, Grantee shall hold harmless Grantor for any acts or omissions of Grantor resulting from Grantee's failure to notify Granter of these changes.

18.3. Notice of Impact. Grantee shall immediately notify Grantor of any event that rr.ay have a material impact on Grantee's ability to perform this Agreement.

18.4. Circumstances Affecting Performance; Notice. In the event Grantee becomes a party to any litigation, investigation or transaction that may reasonably be considered to have a material impact on Grantee's ability to perform under this Agreement, Grantee shall notify Grantor, in writing, within five {5} cc:.!endar days of determining such litigation or transaction may reasonably be considered to have a material impact on the Grantee's ability to perform under this Agreement.

18.5. Effect of Failure to Provide Notice. Failure to provide the notice described in Paragraph 18.4 shall be grounds for immediate termination of this Agreement and any costs incurred aft'=r notice should have bce:i given shall be disallowed.

ARTICIEXIX
STRUCTURAL REORGANIZATION

19.1. Effect of Reorganization. Grantee acknowledges that this Agreement is made by and between Granter and Grantee, as Grantee is currently organized and constituted. No promise or undertaking made hereunder is an assurance that Granter agrees to continue this Agreement, or any license related thereto, should Grantee significantly reorganize or otherwise substantially change the character of its corporate structure, business structure or governance structure. Grantee agrees that it will give Grantor prior notice of any such action or changes significantly affecting its overall structure and will provide any and all reJsonable documentation necessary for Granter to review the proposed transaction including financial records and corporate and shareholder minutes of any corporation which may be involved. This ARTICLE XIX does not rcqui:-e Gra11tee to report on minor changes in the makeup of its governance structure. Nevertheless, PARTT\MC or PART TKREE may impose further restrictions. Failure to comply with this ARTICLE XIX shall constitute a material breach of this Agreement.

ARTICLE XX
AGREEMENTS WITH OTHER STATE AGENCIES

20.1. Copies upon Request. Grantee shall, upon request by Grantor, provide Granter with copies of contracts or other agreements to which Grantee is a party with any other State agency.

ARTICLEXXI
CONFLICT OF INTEREST

21.1. Required Disclosures. Grantee must immediately disclose in writing any potential or actual Conflict of Interesfto the Granter. 2 CFR 200.112 and 44111. Admin. Code 7000.40(b)(3).

21.2. Pr9hibited Payments. Grantee agrees that payments made by Granter under this Agreement will not be used to compensate, directly or indirectly, any person currently holding an elective office in this State including, but not limited to, a seat in the General Assembly. In addition, where the Grantee is not an instrumentality of the State of !llinois, as described in this Paragraph, Grantee agrees that payments made by Granter under this Agreement will not be used to compensate, directly or indirectly, any person employed by an **office or agency of the State of Illinois whose annual compensation is in excess of sixty percent (60%) of the** Governor's annual salary, or $106,447.20 (30 ILCS 500/50-13). An instrumentality of the State of Illinois includes, **without limitation, State departments, agencies, boards, and State universities. An instrumentality of the State of** Illinois does not include, without limitation, municipalities and units of local government and related entities. 2 CFR 200.64.

21.3. Request for Exemption. Grantee may request written approval from Granter for an exemption from Paragraph 21.2. Grantee acknowledges that Granter is under no obligation to provide such exemption and that Granter may, if an exemption is granted, grant such exemption subject to such additional terms and **conditions as Granter may require.**

ARTICLE XXII
EQUIPMENT OR PROPERTY

22.1. Transfec of Eouioment. Granter shall have the right to require that Grantee transfer to Granter **any equipment, including title thereto, purchased in whole or in part with Granter funds, if Granter determines** that Grantee has not met the conditions of 2 CFR 200.439(a). Granter shall notify Grantee in writing should Granter require the transfer of such equipment. Upon such notification by Granter, and upon receipt or delivery of such equipment by Granter, Grantee will be deemed to have transferred the equipment to Granter as if Grantee **had executed a bi!l of sale therefor.**

22.2. Prohibition against Disposition/Encumbrance. The Grantee is prohibited from, and may not sell, transfer, encumber (other than original financing) or otherwise dispose of said equipment, material, or real **property during the Grant Term without Prior Approval of Granter. Any real property acquired using Grant Funds must comply with the requirements of 2 CFR 200.311**

22.3. fg_l!iQ_ment and Procurement. Grantee must comply with the uniform standards set forth in 2 CFR 200.310--200.31.6 governing the management and disposition of property which cost was supported by Grant Funds. Any waiver from such compliance must be granted by either the President's Office of Management and Budget, the Governor's Office of Management and Budget, or both, depending on the source of the Grant Funds used. Additionally, Grantee must compiy with the standards set forth in 2 CFR 200.317-200.326 for use in establishing procedures for the procurement of supplies and other expendable property, equipment, real property **and other seivices with Grant Funds. These standards are furnished to ensure that such materials and services are** obtained in an effective manner and in compliance with the provisions of applicable Federal and State statutes and **executive orders.**

ART:CLE XXIII
PROMOTIOf.JAL MATERIALS; PRIOR NOTIFICATION

23.1. Psblications. Announcements. etc. Use of Grant Funds for promotions is subject to the prohibitions for advertising or public relations costs in 2 CFR 200.421(e). In the event that Granter funds are used

in whole or in part to produce any written publications, announcements, reports, flyers, broch:.ires or other written materials, Grantee shall obtain Prior Approval for the use of those fund.r.; (2 CFR 200.(57) Jr.d c:grees ta inch.!de in these publications, announcements, reports, flyers, brochures and all other such material, the phrase "Funding provided in whole or in part by the [Grantor]."' Exceptions to this requirement must be req·Jested, in writing, from Granter and will be considered authorized only upon written notice thereof to Grantee.

23.2. Prior Notification/Release of Information. Grantee agrees to notify Granter ten (10) days prior to issuing public announcements or press releases concerning work performed pursuant to this Agreement, or funded in whole or in part by this Agreement, and to cooperate with Grantor in joint or coordinated releases of **information.**

ARTICLE XXIV
INSURANCE

24.1. Maintenance of Insurance. Grantee shall maintain in full force and effect during ihe Term of th:s Agreement casualty and bodily injury insurance, as well as insurance sufficient to cover the replacement cost of any and all real or personal property, or both, purchased or, otherwise acquired, or improved in whole or in part, with funds disbursed pursuant to this Agreement. 2 CFR 200.310. Additional insurance requirements may be detailed in **PART TWO** or **PART THREE.**

24.2. Claims. If a claim is submitted for real or personal property, or both, purchased in whole with funds from this Agreement and such claim results in the recovery of money, such money recovered shall be **surrendered to Granter.**

ARTICLE XXV
LAWSUITS

25.1. Independent Contractor. Neither Grantee nor any employee or agent of Grantee acquires any employment rights with Granter by virtue of this Agreement. Grantee will provide the agreed services and achieve the specified results free from the direction or control of Granter as to the means and methods of performance. Grantee will be required to provide its own equipment and supplies necessary to conduct its business; provided, **however, that in the event, for its convenience or otherwise, Granter makes any such equipment or supplies** available to Grantee, Grantee's use of such equipment or supplies provided by Granter pursuant to this Agreement shall be strictly limited to official Granter or State of Illinois business and not for any other purpose, including any personal benefit or gain.

25.2. Liability. Neither Party shall be liable for actions chargeable to the other Party under this **Agreement including, but not limited to, the negligent acts and omissions of Party's agents, empioyees or** subcontractors in the performance of their duties as described under this Agreement, unless such liability is imposed by law. This Agreement shall not be construed as seeking to enlarge or diminish any obligation or duty owed by one Party against the other or against a third party.

ARTICLE XXVI
MISCELLANEOUS

26.1. Gift Ban. Grantee is prohibited from giving gifts to State employees purs"ant to the State

Officials and Employ es Hl1ics Act (5 ILCS 430/10-10) and Executive Order 15-09.

26.2. Access to Internet. Grantee must have Internet access. Internet access may be either dial-up or high-speed. Grantee must maintain, at a minimum, one business e-mail address that will be the primary receiving point for all e-mail correspondence from Grantor. Grantee may list additional e-mail addresses at any time during **the Term of this Agreernerit. The additior.al addresses may be for a specific department or division of Grantee or** for specific employees of Grantee. Grantee must notify Grantor of any e-mail address changes within five (5) business days from the effective date of the change.

26.3. Exhibits and Attachments. **Exhibits A** through§, **PART TWO. PART THREE.** if applicable, and all **other exhibits and attachments hereto are incorporated herein in their entirety.**

26.4. Assignment Prohibited. Grantee acknowledges that this Agreement may not be sold, assigned, or **transferred in any manner by Grantee, to include an ass!gnment of Grantee's rights to receive payment hereunder,** and that any actual or attempted sale, assignment, or transfer by Grantee without the Prior Approval of Grantor in writing shall render this Agreement null, void and of no further effect.

26.5. Amendments. This Agreement may be modified or amended at any time during its Term by mutual consent of the Pa;ties, expressed in writing and signed by the Parties.

26.6. Several?l!i!'l- If any provision of this Agreement is declared invalid, its other provisions shall not be affected thereby.

26.7. No Waivel. No failure of either Party to assert any right or remedy hereunder will act as a waiver of either Part!/s right to assert such right or remedy at a later time or constitute a course of business upon whkh either Party may rely for the purpose of denial of such a right or remedy.

26.8. Apolicable Law: Claims. This Agreement and all subsequent amendments thereto, if any, shall be governed and construed in accordance with the laws of the State of Illinois. Any claim against Grantor arising out of this Ag,eement must be filed exclusively with the Illinois Court of Claims. 705 ILCS 505/1*et seq.* Grantor does **n.ot waive sovereign immunity by entering into this Agreement.**

26.9. Comp!i.cmce with Law. This Agreement and Grantee's obligations and services hereunder are hereby made and must be performed in compliance with ail applicable Federal and State laws, including, without **limitation, Federal regul<cJtions, State administrative ruies, including 44 Ill. Admin. Code 7000, and any and all license requirements or professional certification provisions.**

26.10. Compliance with Confidentiality Laws. If applicable, Grantee shall comply with applicable State and Federal statutes, Federal regulations and Grantor administrative rules regarding confidential records or other **information obtained by Grantee concern·1ng persons served under this Agreement. The records and informat"1on shall be protected by Grantee from unauthorized disclosure.**

26.11. Compliance with Freedom of Informat"lon Act. Upon request, Grantee shall make available to Granter all documents in its possession that Grantor deems necessary to comply with requests made under the Freedom of information Act. (5 ILCS 140/7(2)).

26.12. Precedence. In the event there is a conflict between this Agreement and any of the exhibits or **attachments hereto, th! Agreement shall control. In the event there is a conflict between PART ONE and PART TWO** or **PART** THR E of this Agreement, **PART ONE** shall control. In the event there is a conflict between **PART**

TWO and **PART THREE** of this Agreement, **PART TWO** shall control. In the event there ,s a coaflict between this Agreement and relevant statute(s) or Administrative Rule(s), the relevant statute(s) or ruie(s) shall cont;ol.

26.13. Illinois Grant Funds Recovery Act. In the event of a conflict between the Illinois Grant Funds Recovery Act and the Grant Accountability and Transparency Act, the provisions of the Grant Accountability and Transparency Act shall control. 30 ILCS 708/80.

26.14. Headings. Article and other headings contained in this Agreement are for refere,1ce purposes only and are not intended to define or limit the scope, extent or intent of this Agreement or any provision hereof.

26.15. Entire Agreement. Grantee and Granter acknowledge that this Agreement constitutes the entire **agreement between them and that no promises, terms, or conditions not recited, incorporated or referenced** herein, including prior agreements or oral discussions, shall be binding upon either Grantee or Grantor.

26.16. Counterparts. This Agreement may be executed in one or mere counterparts, each of which shall be considered to be one and the same agreement, binding on all Parties hereto, notwithstanding that all ?arties **are not signatories to the same counterpart. Duplicated signatures, signatures transmitted via facsimile, or** signatures contained in a Portable Document Format (PDF) document shall be deemed original for all purposes.

26.17. Attorney Fees and Costs. Unless prohibited by law, if Granter prevails in any proceeding to enforce the terms of this Agreement, including any administrative hearing pursuant to the Grant Funds Recovery Act or the Grant Accountability and Transparency Act, the Granter has the right to recover reasonable attorneys' **fees, costs and expenses associated with such proceedings.**

THE REMAINDER OF THIS PAGE IS INTENTIONALLY LEFT BLAl\li<.

EXHIBIT A

PRO!ECT DESCRIPTION

The Grantor has been awarded funds from the Federal Emergency Management Agency (FEMA) under the FFY 2018 Homeland Security Grant Program (HSGP). The purpose of the FFY 2018 HSGP is to support state and local efforts to prevent terrorism and other catastrophic events and to prepare the Nation for the threats and hazards that pose the greatest risk to the security of the United States. The HSGP provides funding to implement investments that build, sustain, and deliver the 32 core capabilities essential to achieving the National Preparedness Goal of a secure and resilient Nation. The Grantee will utilize the HSGP grant funds in accordance with this purpose as outlined within the Grantee's approved FFY 2018 Attachment A.

EXHISIT B

DELIVERABLES OR MILESTONES

Deliverables are directly related to the successful completion of the expenditures and projects l:sted in the approved Budget Detail Worksheet and Project Implementation Worksheet.

The Budget Detail Worksheet in Attachment A outlines the expenditures for which the Grantee will seek reimbursement. The Granter will only reimburse those expenditures that specifically !isted in the Budget Detail **Worksheet. If the Grantee has included personnel expenses ir: its Budget Detail \Nork.sheet, ::he Grantee is prohibited from incurring any costs for such personnel expenses until the Grantor provides written approva! to the** Grantee that DHS FEMA GPO has waived grant limitations on personnel costs.

The Project Implementation Worksheet in Attachment A provides a detailed description of the scope of work to be performed using funds received through this Agreement, including a list of specific outcomes and sequential milestones that will be accomplished by the Grantee. These milestones will allow the Grantor to measure progress of the Grantee in achieving the goals of the project.

EXHIBITC

PAYMENT

The Grantee's total compensation and reimbursement shall not exceed the sum of $41,410,104.73.

The Grantee must submit reports or vendor invoices with description of costs, including a statement of payment for personnel costs and affirmation or evidence of delivery and property identification numbers for property subject to **the Grantor's poiicies and procedures, in order to receive compensation through this Agreement. Such reports and** invoices must be submitted to the Granter in accordance with the Grantor's policy and in no event later than 30 days following the expiration of this Agreement. The method of compensation shall be reimbursement in accordance with the invoice voucher procedures of the Office of the State of Illinois Comptroller. The Granter will not reimburse the Grantee for any eY.ercise expenditures unless and until an After Action Report/Improvement Plan is submitted in accordance herein. The Grantee shall maintain appropriate records of actual costs incurred and submit **expenditure information to the Granter.**

EXHIBIT D

CONTACT INFORMATION

CONTACT FOR NOTIFICATION:

Unless specified elsewhere, all notices required or desired to be sent by either Party shal! be sent to the persons listed below.

GRANTOR CONTACT

Name: Jenifer L. Johnson

Title: General Counsel

Address: 2300 South Dirksen
Springfield, IL 62703

Phone: 217/557-4831

E-mail Address: Jenifer.L.Johnson@illinois.gov

GRANTEE CONTACT

Name: Natalie Gutierrez

Title: Deputy Director of Grants

Address: 1411 West Madison Street
Chicago, IL 60607-1809

Phone: 312/746-9434

E-mail Address: Natalie.Gutierrez(,j)cityofchicago.org

EXHIBIT E

PERFORMANCE MEASURES

The Grantee shall provide a quarterly update of the Project Implementation Worksheet in Attachment A to IEMA within fifteen (15) business days after March 31, June 30, September 30, and December 31 throughout the performance period of the Agreement.

The Grantee rnust submit a final Budget Detail Worksheet, Discipline Allocation Worksheet, and Project **Implementation V orks:1::et to the Granter within 30 days after the expiration of the Agreement.**

The Grantee also rnust submit a final After Action Report/Improvement Plan to the Granter within 45 days after each exercise. All cxerdses conducted with funds provided through this Agreement must be National Incident Management System (NIMS) compliant and be managed and executed in accordance with the Homeland Security Exercise and Evaluation Program (HSEEP).

EXHIBITF

PERFORMANCE STANDARDS

Performance standards include:

1. Appropriate use of grant funds in accordance with the approved scope of work and budget, and the terms outlined in this Agreement.

2. The timely submittal of required documentation as defined in Exhibit E of this Agreement.

3. Adequate results from grant monitoring conducted by the Grantor.

EXHIBITG

SPECIFIC CONDITIONS

None.

PART TWO -THE GRANTOR-SPECIFIC TERMS

In addition to the uniform requirements in **PART ONE,** the Granter has the following additional requirements for **its Grantee:**

None.

PART THREE -THE PROJECT-SPECIFIC TERMS

In addition to the uniform requirements in Pt.RT ONE and the Grantor-Specific Terms in PART TWO, the Grantor has the following additionai requirements for this Project:

1. All allocations and use of funds by the Grantee shall be in accordance with the applicable notice of funding opportunity and the requirements set forth therein. The Grantee shall comply with all applicable federal **and state statutes, rcgulations, executive orders, and other policies and requirements in carrying out any** project supported by these funds. The Grantee recognizes that laws, regulations, policies, and administrative practices may be modified from time to time and those modifications may affect project implementation. The Grantee agrees that the most recent requirements **will** apply during the performance period of this Agreement.

2. All subawards issued by the Grantee to this Agreement in excess of $25,000.00 must be pre-approved by IEMA.

3. The Grantee is required to maintain adoption and implementation of the National Incident Management System.

4. **The Grantee wli! provide all necessary financial and managerial resources to meet the terms and** conditions of this Agreement.

5. Funds under this award may supplement, but shall not supplant, state or local funds budgeted for the **same purposes. The Grantee may be required to demonstrate and document that a reduction in non-federal resources occurred for reasons other than the receipt or expected receipt of federal funds.**

6. **The Grantee shall not nde1take any project having the potential to impact EHP resources or initiate procurement w:thout the prior approval of FEMA, including but not limited to construction of communication towers, modification or renovation of existing buildings, structures and facilities, or new construction including replacement of facilities. The EHP review process involves the submission of a** detailed project description along with supporting documentation, so that FEMA may determine whether **the proposed project has the potential to impact environmental resources and/or historic properties. In** some cases, DHS/FEMA is also required to consult with other regulatory agencies and the public to **complete the review process. The EHP review process must be completed and approved before costs are incurred to arry out the proposed project The Grantee must comply with all conditions placed on the project as the result of the EHP review. Any change to the approved project scope of work will require re-evaluation for compliance with these EHP requirements. If ground-disturbing activities occur during project implementc1tion, the Grantee rnust ensure monitoring of ground disturbance, and if any potential archeo!ogical re ot:rces are discovered, the Grantee will immediately cease construction in that area and** notify FEMA and the appropriate State Historic Preservation Office. Any activities that have been initiated without the necessary EHP review and approval will result in a non-compliance finding and will not be eligible for FEMA funding.

7. The Grantee shall affix the applicable copyright notice of 17 USC 401 or 402 and an acknowledgement of U.S. Government sponsorship (including the award number) to any work first produced under this grant.

8. The Grantee shall acknowledge their use of federal funding when issuing statements, press releases, **requests for proposals., bid invitation5, and other documents describing projects or programs funded in** whole or in part with federal funds.

9. The Grantee shall use, manage, and dispose of equipment acquired under this Agreement in accordance with federal and state laws, procedures, and policies. All equipment purchased with funding received through this Agreement shall be used for the entire useful life of the equipment in accordance with the purpose stated in Attachment A. When original or replacement equipment under this grant is no ionger needed for the original project or programs, the Grantee shall request disposition instructions from the Grantor pursuant to 2 CFR 200.313.

10. If the Grantee collects PII, the Grantee is required to have a publicly-available priv,,ry policy that describes what PII it collects, how it uses PII, whether it shares PII with third parties, and how individuals may have their PII corrected where appropriate.

11. The Grantee must obtain the approval of DHS prior to using a DHS or United States Coast Guard sea!, logo, crest, or reproduction of flags or likenesses of DHS agency or Coast Guard officials.

12. If funding will be used to purchase emergency communications equipment or to fund related activities, the Grantee shall comply with the SAFECOM Guidance for Emergency Communication Grants, including **provisions on technical standards that ensure and enhance interoperable communications.**

13. To comply with the insurance provisions of Part I, Article XXIV, the Grantee may self-insure in accordance with Illinois law.

14. A programmatic hold is placed on Investment 4, the Chicago Fusion Center investment, until FEMA approves the Fusion Center Addendum submitted by the Grantee through the Grantor and the hold is released in writing by the Grantor. Until the hold is released, the Grantee is prohibited from obligating or expending funds for Investment 4. The hold may be released by the Grantor via email notification to the Grantee.

15. An additional programmatic hold is placed on Investments 1- 7 until the Grantee submits and the Grantor approves Attachment As for all investments. Until the Grantor releases the hold, the Grantee is prohibited from obligating or expending funds for Investments 1- 7. The hold may be released by the **Granter via email notification to the Grantee.**

INTERGOVERNMENTAL AGREEMENT

BETWEEN
THE STATE OF ILLINOIS, ILLINOIS EMERGENCY MANAGEMENT AGENCY
AND
City of Chicago

The Illinois Emergency Management Agency (Grantor), with its principal office at 2200 South Dirksen Parkway, Springfield, Illinois 62703, and City of Chicago (Grantee), with its principal office at 1411 West Madison Street, Chicago, Illinois 60607-1809, hereby enter into this Intergovernmental Grant Agreement (Agreement). Grantor and Grantee are collectively referred to herein as "Parties" or individually as a "Party."

PART ONE – THE UNIFORM TERMS
RECITALS

WHEREAS, it is the intent of the Parties to perform consistent with all Exhibits and attachments hereto and pursuant to the duties and responsibilities imposed by Grantor under the laws of the State of Illinois and in accordance with the terms, conditions and provisions hereof.

NOW, THEREFORE, in consideration of the foregoing and the mutual agreements contained herein, and for other good and valuable consideration, the value, receipt and sufficiency of which are acknowledged, the Parties hereto agree as follows:

ARTICLE I
AWARD AND GRANTEE-SPECIFIC INFORMATION AND CERTIFICATION

1.1. DUNS Number; SAM Registration; Nature of Entity. Under penalties of perjury, Grantee certifies that 13-505-6039 is Grantee's correct DUNS number, that 36-6005820 is Grantee's correct FEIN, and that Grantee has an active State registration and SAM registration. Grantee is doing business as a Government Unit. If Grantee has not received a payment from the State of Illinois in the last two years, Grantee must submit a W-9 tax form with this Agreement.

1.2. Amount of Agreement. Grant Funds shall not exceed **$**41,511,363.09, of which **$**41,511,363.09 are federal funds. Grantee agrees to accept Grantor's payment as specified in the Exhibits and attachments incorporated herein as part of this Agreement.

1.3. Identification Numbers. The Federal Award Identification Number (FAIN) is EMW-2019-SS-00003-S01, the Federal awarding agency is the United States Department of Homeland Security, and the Federal Award date is, September 1, 2019. The Catalog of Federal Domestic Assistance (CFDA) Name is Homeland Security Grant Program and Number is 97.067. The Catalog of State Financial Assistance (CSFA) Number is 588-40-0455.

1.4. Term. This Agreement shall be effective on October 1, 2019, and shall expire on August 31, 2022, unless terminated pursuant to this Agreement.

1.5. Certification. Grantee certifies under oath that (1) all representations made in this Agreement are true and correct and (2) all Grant Funds awarded pursuant to this Agreement shall be used only for the

purpe>se(s) deacrfbed herein. Grantee acknowledses that the Awardls made solely upon this c:ertfftc:atlonand that any false statements, misrepresentations,ormaterlar omissions shallbelhe basis for Immediate termination of this Aateement 1nd repayment of111Grant Funds.

1.6. **Sfloatyras.** In witness whereof, the Parties *hereto* have caused this Agreement to be executed by their chIlV authorized representatives.

Alfcla **Tate-Namrn. Dfr or**

S – \– o

Date:> - *tC'>t*

By: _ ric Lohrenz, Chief Legal Counsel

Date: 1'2- t9>- 2019

aey **of Chicago**

By: _____

Richard Gld"dlce, Executive Director

Date: DttCCW'\b(r lla lO\'\

Printed Name: A\tl\cw{ GlAiiJt t(.

Printed Title: £t(t Oir«.-h,,

By: - Brett Cox, Chief Fiscal Officer

Date: L z_ /t01

ARTICLE II
REQUIRED REPRESENTATIONS

2.1. Standing and Authority. Grantee warrants that:

(a) Grantee is a governmental entity.

(b) Grantee has the requisite power and authority to execute and deliver this Agreement and all documents to be executed by it in connection with this Agreement, to perform its obligations hereunder and to consummate the transactions contemplated hereby.

(c) The execution and delivery of this Agreement, and the other documents to be executed by Grantee in connection with this Agreement, and the performance by Grantee of its obligations hereunder have been duly authorized by all necessary entity action.

(d) This Agreement and all other documents related to this Agreement, including the Uniform Grant Application, the Exhibits and attachments to which Grantee is a party constitute the legal, valid and binding obligations of Grantee enforceable against Grantee in accordance with their respective terms.

2.2. Compliance with Internal Revenue Code. Grantee certifies that it does and will comply with all provisions of the Federal Internal Revenue Code (26 USC 1), the Illinois Income Tax Act (35 ILCS 5), and all rules promulgated thereunder, including withholding provisions and timely deposits of employee taxes and unemployment insurance taxes.

2.3. Compliance with Federal Funding Accountability and Transparency Act of 2006. Grantee certifies that it does and will comply with the reporting requirements of the Federal Funding Accountability and Transparency Act of 2006 (P.L. 109-282) (FFATA) with respect to Federal Awards greater than or equal to $25,000. A FFATA sub-award report must be filed by the end of the month following the month in which the award was made.

2.4. Compliance with Uniform Grant Rules (2 CFR Part 200). Grantee certifies that it shall adhere to the applicable Uniform Administrative Requirements, Cost Principles, and Audit Requirements, which are published in Title 2, Part 200 of the Code of Federal Regulations, and are incorporated herein by reference. *See* 44 Ill. Admin. Code 7000.30(b)(1)(A).

2.5. Compliance with Registration Requirements. Grantee and its sub-grantees shall: (i) be registered with the Federal SAM; (ii) be in good standing with the Illinois Secretary of State, if applicable; (iii) have a valid DUNS number; and (iv) have successfully completed the annual registration and prequalification through the Grantee Portal. It is Grantee's responsibility to remain current with these registrations and requirements. If Grantee's status with regard to any of these requirements change, or the certifications made in and information provided in the Uniform Grant Application changes, Grantee must notify the Grantor in accordance with ARTICLE XVIII.

ARTICLE III
DEFINITIONS

3.1. Definitions. Capitalized words and phrases used in this Agreement have the following meanings:

"2 CFR Part 200" means the Uniform Administrative Requirements, Cost Principles, and Audit Requirements for Federal Awards published in Title 2, Part 200 of the Code of Federal Regulations.

"Agreement" or "Grant Agreement" has the same meaning as in 44 Ill. Admin. Code Part 7000.

"Allocable Costs" means costs allocable to a particular cost objective if the goods or services involved are chargeable or assignable to such cost objective in accordance with relative benefits received or other equitable relationship. Costs allocable to a specific Program may not be shifted to other Programs in order to meet deficiencies caused by overruns or other fund considerations, to avoid restrictions imposed by law or by the terms of this Agreement, or for other reasons of convenience.

"Allowable Costs" has the same meaning as in 44 Ill. Admin. Code Part 7000.

"Award" has the same meaning as in 44 Ill. Admin. Code Part 7000.

"Budget" has the same meaning as in 44 Ill. Admin. Code Part 7000.

"CFDA" or "Catalog of Federal Domestic Assistance" has the same meaning as in 44 Ill. Admin. Code Part 7000.

"Close-out Report" means a report from the Grantee allowing the Grantor to determine whether all applicable administrative actions and required work have been completed, and therefore closeout actions can commence.

"Conflict of Interest" has the same meaning as in 44 Ill. Admin. Code Part 7000.

"Consolidated Year-End Financial Report" means a financial information presentation in which the assets, equity, liabilities, and operating accounts of an entity and its subsidiaries are combined (after eliminating all inter-entity transactions) and shown as belonging to a single reporting entity.

"Cost Allocation Plan" has the same meaning as in 44 Ill. Admin. Code Part 7000.

"CSFA" or "Catalog of State Financial Assistance" has the same meaning as in 44 Ill. Admin. Code Part 7000.

"Direct Costs" has the same meaning as in 44 Ill. Admin. Code Part 7000.

"Disallowed Costs" has the same meaning as in 44 Ill. Admin. Code Part 7000.

"DUNS Number" means a unique nine-digit identification number provided by Dun & Bradstreet for each physical location of Grantee's organization. Assignment of a DUNS Number is mandatory for all organizations seeking an Award from the State of Illinois.

"FAIN" means the Federal Award Identification Number.

"FFATA" or "Federal Funding Accountability and Transparency Act" has the same meaning as in 31 USC 6101; P.L. 110-252.

"Financial Assistance" has the same meaning as in 44 Ill. Admin. Code Part 7000.

"Fixed-Rate" has the same meaning as in 44 Ill. Admin. Code Part 7000. "Fixed-Rate" is in contrast to fee-for-service, 44 Ill. Admin. Code Part 7000.

"GAAP" or "Generally Accepted Accounting Principles" has the same meaning as in 44 Ill. Admin. Code Part 7000.

"Grant Funds" means the Financial Assistance made available to Grantee through this Agreement.

"Grantee Portal" has the same meaning as in 44 Ill. Admin Code Part 7000.

"Indirect Costs" has the same meaning as in 44 Ill. Admin. Code Part 7000.

"Indirect Cost Rate" means a device for determining in a reasonable manner the proportion of indirect costs each Program should bear. It is a ratio (expressed as a percentage) of the Indirect Costs to a Direct Cost base. If reimbursement of Indirect Costs is allowable under an Award, Grantor will not reimburse those Indirect Costs unless Grantee has established an Indirect Cost Rate covering the applicable activities and period of time, unless Indirect Costs are reimbursed at a fixed rate.

"Indirect Cost Rate Proposal" has the same meaning as in 44 Ill. Admin. Code Part 7000.

"Net Revenue" means an entity's total revenue less its operating expenses, interest paid, depreciation, and taxes. "Net Revenue" is synonymous with "Profit."

"Nonprofit Organization" has the same meaning as in 44 Ill. Admin. Code Part 7000.

"Notice of Award" has the same meaning as in 44 Ill. Admin. Code Part 7000.

"OMB" has the same meaning as in 44 Ill. Admin. Code Part 7000.

"Prior Approval" has the same meaning as in 44 Ill. Admin. Code Part 7000.

"Profit" means an entity's total revenue less its operating expenses, interest paid, depreciation, and taxes. "Profit" is synonymous with "Net Revenue."

"Program" means the services to be provided pursuant to this Agreement.

"Program Costs" means all Allowable Costs incurred by Grantee and the value of the contributions made by third parties in accomplishing the objectives of the Award during the Term of this Agreement.

"Program Income" has the same meaning as in 44 Ill. Admin. Code Part 7000.

"Related Parties" has the meaning set forth in Financial Accounting Standards Board (FASB) Accounting Standards Codification (ASC) 850-10-20.

"SAM" means the federal System for Award Management (SAM); which is the Federal repository into which an entity must provide information required for the conduct of business as a recipient. 2 CFR 25 Appendix A (1)(C)(1).

"State" means the State of Illinois.

"Term" has the meaning set forth in Paragraph 1.4.

"Unallowable Costs" has the same meaning as in 44 Ill. Admin. Code Part 7000.

ARTICLE IV
PAYMENT

4.1. Availability of Appropriation; Sufficiency of Funds. This Agreement is contingent upon and subject to the availability of sufficient funds. Grantor may terminate or suspend this Agreement, in whole or in part, without penalty or further payment being required, if (i) sufficient funds for this Agreement have not been appropriated or otherwise made available to the Grantor by the State or the Federal funding source, (ii) the Governor or Grantor reserves funds, or (iii) the Governor or Grantor determines that funds will not or may not be available for payment. Grantor shall provide notice, in writing, to Grantee of any such funding failure and its election to terminate or suspend this Agreement as soon as practicable. Any suspension or termination pursuant to this Section will be effective upon the date of the written notice unless otherwise indicated.

4.2. Return of Grant Funds. Any Grant Funds remaining that are not expended or legally obligated by Grantee at the end of the Agreement period, or in the case of capital improvement Awards at the end of the time period Grant Funds are available for expenditure or obligation, shall be returned to Grantor within forty-five (45) days. All obligations regarding Grant Funds management shall survive this Agreement's termination or expiration. See 2 CFR200.343(d); 2 CFR 200.305 (b) (9); 30 ILCS 705/5. A Grantee who is required to reimburse Grant Funds and who enters into a deferred payment plan for the purpose of satisfying a past due debt, shall be required to pay interest on such debt as required by Section 10.2 of the Illinois State Collection Act of 1986. 30 ILCS 210; 44 Ill. Admin Code 7000.450(c). In addition, as required by 44 Ill. Admin. Code 7000.440 (b) (2), unless granted a written extension, Grantee must liquidate all obligations incurred under the Award at the end of the period of performance.

4.3. Cash Management Improvement Act of 1990. Unless notified otherwise in **PART TWO** or **PART THREE**, Federal funds received under this Agreement shall be managed in accordance with the Cash Management Improvement Act of 1990 (31 USC 6501 *et seq.*) and any other applicable Federal laws or regulations. See 2 CFR 200.305; 44 Ill. Admin. Code Part 7000.

4.4. Payments to Third Parties. Grantee agrees that Grantor shall have no liability to Grantee when Grantor acts in good faith to redirect all or a portion of any Grantee payment to a third party. Grantor will be deemed to have acted in good faith when it is in possession of information that indicates Grantee authorized Grantor to intercept or redirect payments to a third party or when so ordered by a court of competent jurisdiction.

4.5. Modifications to Estimated Amount. If the Agreement amount is established on an estimated basis, then it may be increased by mutual agreement at any time during the Term. Grantor may decrease the

estimated amount of this Agreement at any time during the Term if (i) Grantor believes Grantee will not use the funds during the Term, (ii) Grantor believes Grantee has used funds in a manner that was not authorized by this Agreement, (iii) sufficient funds for this Agreement have not been appropriated or otherwise made available to the Grantor by the State or the Federal funding source, (iv) the Governor or Grantor reserves funds, or (v) the Governor or Grantor determines that funds will or may not be available for payment. Grantee will be notified, in writing, of any adjustment of the estimated amount of this Agreement. In the event of such reduction, services provided by Grantee under **Exhibit A** may be reduced accordingly. Grantee shall be paid for work satisfactorily performed prior to the date of the notice regarding adjustment. 2 CFR 200.308.

4.6. Interest.

(a) All interest earned on Grant Funds held by a Grantee shall be treated in accordance with 2 CFR 200.305(b)(9), unless otherwise provided in **PART TWO** or **PART THREE**. Any amount due shall be remitted annually in accordance with 2 CFR 200.305(b)(9) or to the Grantor, as applicable.

(b) Grant Funds shall be placed in an insured account, whenever possible, that bears interest, unless exempted under 2 CFR Part 200.305(b)(8).

4.7. Timely Billing Required. Grantee must submit any payment request to Grantor within thirty (30) days of the end of the quarter, unless another billing schedule is specified in **PART TWO**, **PART THREE** or **Exhibit C**. Failure to submit such payment request timely will render the amounts billed an unallowable cost which Grantor cannot reimburse. In the event that Grantee is unable, for good cause, to submit its payment request timely, Grantee shall timely notify Grantor and may request an extension of time to submit the payment request. Grantor's approval of Grantee's request for an extension shall not be unreasonably withheld.

4.8. Certification. Pursuant to 2 CFR 200.415, each invoice and report submitted by Grantee or Sub-Grantee must contain the following certification by an official authorized to legally bind the Grantee of Sub-Grantee:

> By signing this report [or payment request], I certify to the best of my knowledge and belief that the report [or payment request] is true, complete, and accurate, and the expenditures, disbursements and cash receipts are for the purposes and objectives set forth in the terms and conditions of the Federal or State pass-through award; and that supporting documentation has been submitted as required by the grant agreement. I acknowledge that approval for any other expenditure described herein shall be considered conditional subject to further review and verification in accordance with the monitoring and records retention provisions of the grant agreement. I am aware that any false, fictitious, or fraudulent information, or the omission of any material fact, may subject me to criminal, civil or administrative penalties for fraud, false statements, false claims or otherwise. (U.S. Code Title 18, Section 1001 and Title 31, Sections 3729-3730 and 3801-3812); (30 ILCS 708/120).

ARTICLE V
SCOPE OF GRANT ACTIVITIES/PURPOSE OF GRANT

5.1. Scope of Grant Activities/Purpose of Grant. Grantee will conduct the Grant Activities or provide the services as described in the Exhibits and attachments, including **Exhibit A** (Project Description) and **Exhibit B** (Deliverables), incorporated herein and in accordance with all terms and conditions set forth herein and all applicable administrative rules. In addition, the State's Notice of Award is incorporated herein by reference. All Grantor-specific provisions and programmatic reporting required under this Agreement are described in **PART TWO** (The Grantor-Specific Terms). All Project-specific provisions and reporting required under this Agreement are described in **PART THREE**.

5.2. Scope Revisions. Grantee shall obtain Prior Approval from Grantor whenever a Scope revision is necessary for one or more of the reasons enumerated in 2 CFR 200.308. All requests for Scope revisions that require Grantor approval shall be signed by Grantee's authorized representative and submitted to Grantor for approval. Expenditure of funds under a requested revision is prohibited and will not be reimbursed if expended before Grantor gives written approval. *See* 2 CFR 200.308.

5.3. Specific Conditions. If applicable, specific conditions required after a risk assessment will be included in **Exhibit G**. Grantee shall adhere to the specific conditions listed therein.

ARTICLE VI
BUDGET

6.1. Budget. The Budget is a schedule of anticipated grant expenditures that is approved by Grantor for carrying out the purposes of the Award. When Grantee or third parties support a portion of expenses associated with the Award, the Budget includes the non-Federal as well as the Federal share (and State share if applicable) of grant expenses. The Budget submitted by Grantee at application, or a revised Budget subsequently submitted and approved by Grantor, is considered final and is incorporated herein as an attachment.

6.2. Budget Revisions. Grantee shall obtain Prior Approval from Grantor whenever a Budget revision is necessary for one or more of the reasons enumerated in 2 CFR 200.308; 44 Ill. Admin. Code 7000.370(b). All requests for Budget revisions that require Grantor approval shall be signed by Grantee's authorized representative and submitted to Grantor for approval. Expenditure of funds under a requested revision is prohibited and will not be reimbursed if expended before Grantor gives written approval. 2 CFR 200.308.

6.3. Discretionary Line Item Transfers. Unless prohibited from doing so in 2 CFR 200.308, transfers between approved line items may be made without Grantor's approval only if the total amount transferred does not exceed the allowable variance of the greater of either (i) ten percent (10%) of the Budget line item or (ii) one thousand dollars ($1,000) of the Budget line item. Discretionary line item transfers may not result in an increase to the Budget.

6.4. Non-discretionary Line Item Transfers. Total line item transfers exceeding the allowable variance of the greater of either (i) ten percent (10%) of the Budget line item or (ii) one thousand dollars ($1,000) of the Budget line item require Grantor approval as set forth in Paragraph 6.2.

6.5. Notification. Within thirty (30) calendar days from the date of receipt of the request for Budget revisions, Grantor will review the request and notify Grantee whether the Budget revision has been approved, denied, or the date upon which a decision will be reached.

ARTICLE VII
ALLOWABLE COSTS

7.1. Allowability of Costs; Cost Allocation Methods. The allowability of costs and cost allocation methods for work performed under this Agreement shall be determined in accordance with 2 CFR 200 Subpart E and Appendices III, IV, and V.

7.2. Indirect Cost Rate Submission.

(a) All Grantees must make an Indirect Cost Rate election in the Grantee Portal, even grantees that do not charge or expect to charge Indirect Costs.

(b) A Grantee must submit an Indirect Cost Rate Proposal in accordance with federal regulations, in a format prescribed by Grantor. For Grantees who have never negotiated an Indirect Cost Rate before, the Indirect Cost Rate Proposal must be submitted for approval no later than three months after the effective date of the Award. For Grantees who have previously negotiated an Indirect Cost Rate, the Indirect Cost Rate Proposal must be submitted for approval within 180 days of the Grantee's fiscal year end, as dictated in the applicable appendices, such as:

(i) Appendix V and VII to 2 CFR Part 200 governs Indirect Cost Rate Proposals for State and local governments,
(ii) Appendix III to 2 CFR Part 200 governs Indirect Cost Rate Proposals for public and private institutions of higher education,
(iii) Appendix IV to 2 CFR Part 200 governs Indirect (F&A) Costs Identification and Assignment, and Rate Determination for Nonprofit Organizations, and
(iv) Appendix V to Part 200 governs State/Local Government-wide Central Service Cost Allocation Plans.

(c) A Grantee who has a current, applicable rate negotiated by a cognizant Federal agency shall provide to Grantor a copy of its Indirect Cost Rate acceptance letter from the Federal government and a copy of the cost policy statement used to negotiate that rate. Grantor will accept that Indirect Cost Rate, up to any statutory, rule-based or programmatic limit.

7.3. Transfer of Costs. Cost transfers between Grants, whether as a means to compensate for cost overruns or for other reasons, are unallowable. *See* 2 CFR 200.451.

7.4. Higher Education Cost Principles. The Federal cost principles that apply to public and private institutions of higher education are set forth in 2 CFR Part 200 Subpart E and Appendix III.

7.5. Government Cost Principles. The Federal cost principles that apply to State, local and Federally-recognized Indian tribal governments are set forth in 2 CFR Part 200 Subpart E, Appendix V, and Appendix VII.

7.6. Financial Management Standards. The financial management systems of Grantee must meet the following standards:

(a) **Accounting System**. Grantee organizations must have an accounting system that provides accurate, current, and complete disclosure of all financial transactions related to each State- and Federally-funded Program. Accounting records must contain information pertaining to State and Federal pass-through awards, authorizations, obligations, unobligated balances, assets, outlays, and income.

These records must be maintained on a current basis and balanced at least quarterly. Cash contributions to the Program from third parties must be accounted for in the general ledger with other Grant Funds. Third party in-kind (non-cash) contributions are not required to be recorded in the general ledger, but must be under accounting control, possibly through the use of a memorandum ledger. To comply with 2 CFR 200.305(b)(7)(i) and 30 ILCS 708/520. Grantee shall use reasonable efforts to ensure that funding streams are delineated within Grantee's accounting system. *See* 2 CFR 200.302.

(b) **Source Documentation**. Accounting records must be supported by such source documentation as canceled checks, bank statements, invoices, paid bills, donor letters, time and attendance records, activity reports, travel reports, contractual and consultant agreements, and subaward documentation. All supporting documentation should be clearly identified with the Award and general ledger accounts which are to be charged or credited.

(i) The documentation standards for salary charges to grants are prescribed by 2 CFR 200.430, and in the cost principles applicable to the entity's organization (Paragraphs 7.4 through 7.5).

(ii) If records do not meet the standards in 2 CFR 200.430, then Grantor may notify Grantee in **PART TWO**, **PART THREE** or **Exhibit G** of the requirement to submit Personnel activity reports. *See* 2 CFR 200.430(i)(8). Personnel activity reports shall account on an after-the-fact basis for one hundred percent (100%) of the employee's actual time, separately indicating the time spent on the grant, other grants or projects, vacation or sick leave, and administrative time, if applicable. The reports must be signed by the employee, approved by the appropriate official, and coincide with a pay period. These time records should be used to record the distribution of salary costs to the appropriate accounts no less frequently than quarterly.

(iii) Formal agreements with independent contractors, such as consultants, must include a description of the services to be performed, the period of performance, the fee and method of payment, an itemization of travel and other costs which are chargeable to the agreement, and the signatures of both the contractor and an appropriate official of Grantee.

(iv) If third party in-kind (non-cash) contributions are used for Grant purposes, the valuation of these contributions must be supported with adequate documentation.

(c) **Internal Control**. Effective control and accountability must be maintained for all cash, real and personal property, and other assets. Grantee must adequately safeguard all such property and must provide assurance that it is used solely for authorized purposes. Grantee must also have systems in place that provide reasonable assurance that the information is accurate, allowable, and compliant with the terms and conditions of this Agreement. 2 CFR 200.303.

(d) **Budget Control**. Records of expenditures must be maintained for each Award by the cost categories of the approved Budget (including indirect costs that are charged to the Award), and actual expenditures are to be compared with Budgeted amounts at least quarterly.

(e) **Cash Management**. Requests for advance payment shall be limited to Grantee's immediate cash needs. Grantee must have written procedures to minimize the time elapsing between the receipt and the disbursement of Grant Funds to avoid having excess funds on hand. 2 CFR 200.305.

7.7. Federal Requirements. All Awards, whether funded in whole or in part with either Federal or State funds, are subject to Federal requirements and regulations, including but not limited to 2 CFR Part 200, 44 Ill. Admin. Code 7000.30(b) and the Financial Management Standards in Paragraph 7.6.

7.8. Profits. It is not permitted for any person or entity to earn a Profit from an Award. *See, e.g.*, 2 CFR 200.400(g); *see also* 30 ILCS 708/60(a)(7).

7.9. Management of Program Income. Grantee is encouraged to earn income to defray program costs where appropriate, subject to 2 CFR 200.307.

ARTICLE VIII
REQUIRED CERTIFICATIONS

8.1. Certifications. Grantee shall be responsible for compliance with the enumerated certifications to the extent that the certifications apply to Grantee.

(a) **Bribery.** Grantee certifies that it has not been convicted of bribery or attempting to bribe an officer or employee of the State of Illinois, nor made an admission of guilt of such conduct which is a matter of record (30 ILCS 500/50-5).

(b) **Bid Rigging.** Grantee certifies that it has not been barred from contracting with a unit of State or local government as a result of a violation of Paragraph 33E-3 or 33E-4 of the Criminal Code of 1961 (720 ILCS 5/33E-3 or 720 ILCS 5/33E-4, respectively).

(c) **Debt to State.** Grantee certifies that neither it, nor its affiliate(s), is/are barred from receiving an Award because Grantee, or its affiliate(s), is/are delinquent in the payment of any debt to the State, unless Grantee, or its affiliate(s), has/have entered into a deferred payment plan to pay off the debt, and Grantee acknowledges Grantor may declare the Agreement void if the certification is false (30 ILCS 500/50-11).

(d) **Educational Loan.** Grantee certifies that it is not barred from receiving State agreements as a result of default on an educational loan (5 ILCS 385/1 *et seq.*).

(e) **International Boycott.** Grantee certifies that neither it nor any substantially owned affiliated company is participating or shall participate in an international boycott in violation of the provision of the U.S. Export Administration Act of 1979 (50 USC Appendix 2401 *et seq.*) or the regulations of the U.S. Department of Commerce promulgated under that Act (15 CFR Parts 730 through 774).

(f) **Dues and Fees.** Grantee certifies that it is not prohibited from receiving an Award because it pays dues or fees on behalf of its employees or agents, or subsidizes or otherwise reimburses them for payment of their dues or fees to any club which unlawfully discriminates (775 ILCS 25/1 *et seq.*).

(g) **Pro-Children Act.** Grantee certifies that it is in compliance with the Pro-Children Act of 2001 in that it prohibits smoking in any portion of its facility used for the provision of health, day care, early childhood development services, education or library services to children under the age of eighteen (18), which services are supported by Federal or State government assistance (except such portions of the facilities which are used for inpatient substance abuse treatment) (20 USC 7181-7184).

(h) **Drug-Free Work Place.** If Grantee is not an individual, Grantee certifies it will provide a drug free workplace pursuant to the Drug Free Workplace Act. 30 ILCS 580/3. If Grantee is an individual and this Agreement is valued at more than $5,000, Grantee certifies it shall not engage in the unlawful manufacture, distribution, dispensation, possession, or use of a controlled substance during the performance of the Agreement. 30 ILCS 580/4. Grantee further certifies that it is in compliance with the government-wide requirements for a drug-free workplace as set forth in 41 USC 8102.

(i) **Motor Voter Law.** Grantee certifies that it is in full compliance with the terms and provisions of the National Voter Registration Act of 1993 (52 USC 20501 *et seq.*).

(j) **Clean Air Act and Clean Water Act.** Grantee certifies that it is in compliance with all applicable standards, order or regulations issued pursuant to the Clean Air Act (42 USC §7401 *et seq.*) and the Federal Water Pollution Control Act, as amended (33 USC 1251 *et seq.*).

(k) **Debarment.** Grantee certifies that it is not debarred, suspended, proposed for debarment, declared ineligible, or voluntarily excluded from participation in this Agreement by any Federal department or agency 2 CFR 200.205(a), or by the State (*See* 30 ILCS 708/25(6)(G)).

(l) **Non-procurement Debarment and Suspension.** Grantee certifies that it is in compliance with Subpart C of 2 CFR Part 180 as supplemented by 2 CFR Part 376, Subpart C.

(m) **Grant for the Construction of Fixed Works.** Grantee certifies that all Programs for the construction of fixed works which are financed in whole or in part with funds provided by this Agreement shall be subject to the Prevailing Wage Act (820 ILCS 130/0.01 *et seq.*) unless the provisions of that Act exempt its application. In the construction of the Program, Grantee shall comply with the requirements of the Prevailing Wage Act including, but not limited to, inserting into all contracts for such construction a stipulation to the effect that not less than the prevailing rate of wages as applicable to the Program shall be paid to all laborers, workers, and mechanics performing work under the Award and requiring all bonds of contractors to include a provision as will guarantee the faithful performance of such prevailing wage clause as provided by contract.

(n) **Health Insurance Portability and Accountability Act.** Grantee certifies that it is in compliance with the Health Insurance Portability and Accountability Act of 1996 (HIPAA), Public Law No. 104-191, 45 CFR Parts 160, 162 and 164, and the Social Security Act, 42 USC 1320d-2 through 1320d-7, in that it may not use or disclose protected health information other than as permitted or required by law and agrees to use appropriate safeguards to prevent use or disclosure of the protected health information. Grantee shall maintain, for a minimum of six (6) years, all protected health information.

(o) **Criminal Convictions.** Grantee certifies that neither it nor any managerial agent of Grantee has been convicted of a felony under the Sarbanes-Oxley Act of 2002, nor a Class 3 or Class 2 felony under Illinois Securities Law of 1953, or that at least five (5) years have passed since the date of the conviction. Grantee further certifies that it is not barred from receiving an Award under 30 ILCS 500/50-10.5, and acknowledges that Grantor shall declare the Agreement void if this certification is false (30 ILCS 500/50-10.5).

(p) **Forced Labor Act.** Grantee certifies that it complies with the State Prohibition of Goods from Forced Labor Act, and certifies that no foreign-made equipment, materials, or supplies furnished to the State under this Agreement have been or will be produced in whole or in part by forced labor, convict labor, or indentured labor under penal sanction (30 ILCS 583).

(q) **Illinois Use Tax.** Grantee certifies in accordance with 30 ILCS 500/50-12 that it is not barred from receiving an Award under this Paragraph. Grantee acknowledges that this Agreement may be declared void if this certification is false.

(r) **Environmental Protection Act Violations.** Grantee certifies in accordance with 30 ILCS 500/50-14 that it is not barred from receiving an Award under this Paragraph. Grantee acknowledges that

this Agreement may be declared void if this certification is false.

(s) **Goods from Child Labor Act.** Grantee certifies that no foreign-made equipment, materials, or supplies furnished to the State under this Agreement have been produced in whole or in part by the labor of any child under the age of twelve (12) (30 ILCS 584).

(t) **Federal Funding Accountability and Transparency Act of 2006.** Grantee certifies that it is in compliance with the terms and requirements of 31 USC 6101.

ARTICLE IX
CRIMINAL DISCLOSURE

9.1. Mandatory Criminal Disclosures. Grantee shall continue to disclose to Grantor all violations of criminal law involving fraud, bribery or gratuity violations potentially affecting this Award. *See* 30 ILCS 708/40. Additionally, if Grantee receives over $10 million in total Financial Assistance, funded by either State or Federal funds, during the period of this Award, Grantee must maintain the currency of information reported to SAM regarding civil, criminal or administrative proceedings as required by 2 CFR 200.113 and Appendix XII of 2 CFR Part 200, and 30 ILCS 708/40.

ARTICLE X
UNLAWFUL DISCRIMINATION

10.1. Compliance with Nondiscrimination Laws. Both Parties, their employees and subcontractors under subcontract made pursuant to this Agreement, remain compliant with all applicable provisions of State and Federal laws and regulations pertaining to nondiscrimination, sexual harassment and equal employment opportunity including, but not limited to, the following laws and regulations and all subsequent amendments thereto:

(a) The Illinois Human Rights Act (775 ILCS 5/1-101 *et seq.*), including, without limitation, 44 Ill. Admin. Code Part 750, which is incorporated herein;

(b) The Public Works Employment Discrimination Act (775 ILCS 10/1 *et seq.*);

(c) The United States Civil Rights Act of 1964 (as amended) (42 USC 2000a- and 2000h-6). (*See also* guidelines to Federal Financial Assistance Recipients Regarding Title VI Prohibition Against National Origin Discrimination Affecting Limited English Proficient Persons [Federal Register: February 18, 2002 (Volume 67, Number 13, Pages 2671-2685)]);

(d) Section 504 of the Rehabilitation Act of 1973 (29 USC 794);

(e) The Americans with Disabilities Act of 1990 (as amended) (42 USC 12101 *et seq.*); and

(f) The Age Discrimination Act (42 USC 6101 *et seq.*).

ARTICLE XI
LOBBYING

11.1. Improper Influence. Grantee certifies that no Grant Funds have been paid or will be paid by or on

behalf of Grantee to any person for influencing or attempting to influence an officer or employee of any government agency, a member of Congress or Illinois General Assembly, an officer or employee of Congress or Illinois General Assembly, or an employee of a member of Congress or Illinois General Assembly in connection with the awarding of any agreement, the making of any grant, the making of any loan, the entering into of any cooperative agreement, or the extension, continuation, renewal, amendment or modification of any agreement, grant, loan or cooperative agreement. 31 USC 1352. Additionally, Grantee certifies that it has filed the required certification under the Byrd Anti-Lobbying Amendment (31 USC 1352), if applicable.

11.2. Federal Form LLL. If any funds, other than Federally-appropriated funds, were paid or will be paid to any person for influencing or attempting to influence any of the above persons in connection with this Agreement, the undersigned must also complete and submit Federal Form LLL, Disclosure of Lobbying Activities Form, in accordance with its instructions.

11.3. Lobbying Costs. Grantee certifies that it is in compliance with the restrictions on lobbying set forth in 2 CFR Part 200.450. For any Indirect Costs associated with this Agreement, total lobbying costs shall be separately identified in the Program Budget, and thereafter treated as other Unallowable Costs.

11.4. Procurement Lobbying. Grantee warrants and certifies that it and, to the best of its knowledge, its sub-grantees have complied and will comply with Executive Order No. 1 (2007) (EO 1-2007). EO 1-2007 generally prohibits Grantees and subcontractors from hiring the then-serving Governor's family members to lobby procurement activities of the State, or any other unit of government in Illinois including local governments, if that procurement may result in a contract valued at over $25,000. This prohibition also applies to hiring for that same purpose any former State employee who had procurement authority at any time during the one-year period preceding the procurement lobbying activity.

11.5. Subawards. Grantee must include the language of this ARTICLE XI in the award documents for any subawards made pursuant to this Award at all tiers. All sub-awardees are also subject to certification and disclosure. Pursuant to Appendix II(I) to 2 CFR Part 200, Grantee shall forward all disclosures by contractors regarding this certification to Grantor.

11.6. Certification. This certification is a material representation of fact upon which reliance was placed to enter into this transaction and is a prerequisite for this transaction, pursuant to 31 USC 1352. Any person who fails to file the required certifications shall be subject to a civil penalty of not less than $10,000, and not more than $100,000, for each such failure.

ARTICLE XII
MAINTENANCE AND ACCESSIBILITY OF RECORDS; MONITORING

12.1. Records Retention. Grantee shall maintain for three (3) years from the date of submission of the final expenditure report, adequate books, all financial records and, supporting documents, statistical records, and all other records pertinent to this Award, adequate to comply with 2 CFR 200.333, unless a different retention period is specified in 2 CFR 200.333 or 44 Ill. Admin. Code 7000.430(a) and (b). If any litigation, claim or audit is started before the expiration of the retention period, the records must be retained until all litigation, claims or audit exceptions involving the records have been resolved and final action taken.

12.2. Accessibility of Records. Grantee, in compliance with 2 CFR 200.336 and 44 Ill. Admin. Code 7000.430(e) , shall make books, records, related papers, supporting documentation and personnel relevant to this Agreement available to authorized Grantor representatives, the Illinois Auditor General, Illinois Attorney General,

any Executive Inspector General, the Grantor's Inspector General, Federal authorities, any person identified in 2 CFR 200.336, and any other person as may be authorized by Grantor (including auditors), by the State of Illinois or by Federal statute. Grantee shall cooperate fully in any such audit or inquiry.

12.3. Failure to Maintain Books and Records. Failure to maintain books, records and supporting documentation, as described in this ARTICLE XII, shall establish a presumption in favor of the State for the recovery of any funds paid by the State under this Agreement for which adequate books, records and supporting documentation are not available to support disbursement.

12.4. Monitoring and Access to Information. Grantee must monitor its activities to assure compliance with applicable State and Federal requirements and to assure its performance expectations are being achieved. Grantor shall monitor the activities of Grantee to assure compliance with all requirements and performance expectations of the award. Grantee shall timely submit all financial and performance reports, and shall supply, upon Grantor's request, documents and information relevant to the Award. Grantor may make site visits as warranted by program needs. *See* 2 CFR 200.328 and 200.331. Additional monitoring requirements may be in **PART TWO** or **PART THREE**.

ARTICLE XIII
FINANCIAL REPORTING REQUIREMENTS

13.1. Required Periodic Financial Reports. Grantee agrees to submit financial reports as requested and in the format required by Grantor. Grantee shall file quarterly reports with Grantor describing the expenditure(s) of the funds related thereto, unless more frequent reporting is required by the Grantee pursuant to specific award conditions. 2 CFR 200.207. The first of such reports shall cover the first three months after the Award begins. Quarterly reports must be submitted no later than 30 calendar days following the three-month period covered by the report. Additional information regarding required financial reports may be set forth in **Exhibit G**. Failure to submit the required financial reports may cause a delay or suspension of funding. 30 ILCS 705/1 *et seq.*; 2 CFR 207(b)(3) and 200.327. Any report required by 30 ILCS 708/125 may be detailed in PART TWO or PART THREE.

13.2. Close-out Reports.

(a) Grantee shall submit a Close-out Report within 60 calendar days following the end of the period of performance for this Agreement. In the event that this Agreement is terminated prior to the end of the Term, Grantee shall submit a Close-out Report within 60 calendar days of such termination. The format of this Close-out Report shall follow a format prescribed by Grantor. 2 CFR 200.343; 44 Ill. Admin. Code 7000.430(b).

(b) If an audit or review of Grantee occurs and results in adjustments after Grantee submits a Close-out Report, Grantee will submit a new Close-out Report based on audit adjustments, and immediately submit a refund to Grantor, if applicable. 2 CFR 200.344.

13.3. Consolidated Year-End Financial Reports.

(a) This Paragraph 13.3 applies to all Grantees, unless exempted by **PART TWO** or **PART THREE**.

(b) Grantees shall submit Consolidated Year-End Financial Reports, according to the required audit (see ARTICLE XV), namely:

(i) For Grantees required to conduct a single audit (or program-specific audit), within the earlier of (a) 9 months after the Grantee's fiscal year ending on or after June 30, or (b) 30 calendar days following completion of the audit; or

(ii) For Grantees required to conduct a Financial Statement Audit or for Grantees not required to perform an audit, within 180 days after the Grantee's fiscal year ending on or after June 30.

These deadlines may be extended at the discretion of the Grantor, but only for rare and unusual circumstances such as a natural disaster.

(c) The Consolidated Year-End Financial Report must cover the same period the Audited Financial Statements cover. If no Audited Financial Statements are required, however, then the Consolidated Year-End Financial Report must cover the same period as the Grantee's tax return.

(d) Consolidated Year-End Financial Reports must include an in relation to opinion from the report issuer on the financial statements included in the Consolidated Year-End Financial Report.

(e) Consolidated Year-End Financial Reports shall follow a format prescribed by Grantor.

(f) Notwithstanding anything herein to the contrary, when such reports or statements required under this section are prepared by the Illinois Auditor General, if they are not available by the above-specified due date, they will be provided to Grantor within thirty (30) days of becoming available.

13.4. Effect of Failure to Comply. Failure to comply with reporting requirements shall result in the withholding of funds, the return of improper payments or Unallowable Costs, will be considered a material breach of this Agreement and may be the basis to recover Grant Funds. Grantee's failure to comply with this ARTICLE XIII, ARTICLE XIV, or ARTICLE XV shall be considered prima facie evidence of a breach and may be admitted as such, without further proof, into evidence in an administrative proceeding before Grantor, or in any other legal proceeding. Grantee should refer to the State of Illinois Grantee Compliance Enforcement System for policy and consequences for failure to comply.

ARTICLE XIV
PERFORMANCE REPORTING REQUIREMENTS

14.1. Required Periodic Performance Reports. Grantee agrees to submit Performance Reports as requested and in the format required by Grantor. Performance Measures listed in **Exhibit E** must be reported quarterly, unless otherwise specified in **PART TWO** or **PART THREE**. Unless so specified, the first of such reports shall cover the first three months after the Award begins. If Grantee is not required to report performance quarterly, then Grantee must submit a Performance Report at least annually. Pursuant to 2 CFR 200.207, specific conditions may be imposed requiring Grantee to report more frequently based on the risk assessment or the merit based review of the application. In such cases, Grantor shall notify Grantee of same in **Exhibit G**. Pursuant to 2 CFR 200.328, periodic Performance Reports shall be submitted no later than 30 calendar days following the period covered by the report. For certain construction-related Awards, such reports may be exempted as identified in **PART TWO** or **PART THREE**. 2 CFR 200.328 and 44 Ill. Admin. Code 7000.430(b)(2) . Failure to submit such required Performance Reports may cause a delay or suspension of funding. 30 ILCS 705/1 *et seq.*

14.2. Close-out Performance Reports. Grantee agrees to submit a Close-out Performance Report, in the format required by Grantor, within 60 calendar days following the end of the period of performance. *See* 2 CFR 200.343. 44 Ill. Admin. Code 7000.430(b)(1).

14.3. Content of Performance Reports. Pursuant to 2 CFR 200.328(b)(2) all Performance Reports must include Program qualitative and quantitative information, including a comparison of actual accomplishments to the objectives of the award established for the period; where the accomplishments can be quantified, a computation of the cost if required; performance trend data and analysis if required; and reasons why established goals were not met, if appropriate. Appendices may be used to include additional supportive documentation. Additional content and format guidelines for the Performance Reports will be determined by Grantor contingent on the Award's statutory, regulatory and administrative requirements, and are included in **PART TWO** or **PART THREE** of this Agreement.

14.4. Performance Standards. Grantee shall perform in accordance with the Performance Standards set forth in **Exhibit F**. *See* 2 CFR 200.301 and 200.210.

ARTICLE XV
AUDIT REQUIREMENTS

15.1. Audits. Grantee shall be subject to the audit requirements contained in the Single Audit Act Amendments of 1996 (31 USC 7501-7507) and Subpart F of 2 CFR Part 200, and the audit rules and policies set forth by the Governor's Office of Management and Budget. *See* 30 ILCS 708/65(c): 44 Ill. Admin. Code 7000.90.

15.2. Audit Requirements.

(a) Single and Program-Specific Audits. If, during its fiscal year, Grantee expends $750,000 or more in Federal Awards (direct federal and federal pass-through awards combined), Grantee must have a single audit or program-specific audit conducted for that year as required by 2 CFR 200.501 and other applicable sections of Subpart F of 2 CFR Part 200. The audit report packet must be completed as described in 2 CFR 200.512 (single audit) or 2 CFR 200.507 (program-specific audit). The audit report packet and all required submissions must be submitted to Grantor within the earlier of (i) 30 calendar days after receipt of the auditor's report(s) or (ii) nine (9) months after the end of the Grantee's audit period.

(b) Financial Statement Audit. If, during its fiscal year, Grantee expends less than $750,000 in Federal Awards, Grantee is subject to the following audit requirements:

(i) If, during its fiscal year, Grantee expends $500,000 or more in Federal and State Awards, singularly or in any combination, from all sources, Grantee must have a financial statement audit conducted in accordance with the Generally Accepted Government Auditing Standards (GAGAS). Grantee may be subject to additional requirements in **PART TWO, PART THREE** or **Exhibit G** based on the Grantee's risk profile.

(ii) If, during its fiscal year, Grantee expends less than $500,000 in Federal and State Awards, singularly or in any combination, from all sources, but expends $300,000 or more in Federal and State Awards, singularly or in any combination, from all sources, Grantee must have a financial statement audit conducted in accordance with the Generally Accepted Auditing Standards (GAAS).

(iii) If Grantee is a Local Education Agency (as defined in 34 CFR 77.1), Grantee shall

have a financial statement audit conducted in accordance with GAGAS, as required by 23 Ill. Admin. Code 100.110, regardless of the dollar amount of expenditures of Federal and State Awards.

(iv) If Grantee does not meet the requirements in subsections 15.2(b) and 15.2(c)(i-iii) but is required to have a financial statement audit conducted based on other regulatory requirements, Grantee must submit those audits for review.

(v) Grantee must submit its financial statement audit report packet, as set forth in 44 Ill. Admin. Code 7000.90(h)(2) and the current GATA audit manual, to the Grantee Portal within the earlier of (i) 30 calendar days after receipt of the auditor's report(s) or (ii) 6 months after the end of the Grantee's audit period.

15.3. Performance of Audits. For those organizations required to submit an independent audit report, the audit is to be conducted by the Illinois Auditor General, or a Certified Public Accountant or Certified Public Accounting Firm licensed in the State of Illinois or in accordance with Section 5.2 of the Illinois Public Accounting Act (225 ILCS 450/5.2). For audits required to be performed subject to Generally Accepted Government Auditing Standards, Grantee shall request and maintain on file a copy of the auditor's most recent peer review report and acceptance letter. Grantee shall follow procedures prescribed by Grantor for the preparation and submission of audit reports and any related documents.

15.4. Delinquent Reports. Notwithstanding anything herein to the contrary, when such reports or statements required under this section are prepared by the Illinois Auditor General, if they are not available by the above-specified due date, they will be provided to Grantor within thirty (30) days of becoming available. Otherwise, Grantee should refer to the State of Illinois Grantee Compliance Enforcement System for policy and consequences for late reporting. 44 Ill. Admin. Code 7000.80.

ARTICLE XVI
TERMINATION; SUSPENSION; NON-COMPLIANCE

16.1. Termination.

(a) This Agreement may be terminated, in whole or in part, by either Party for any or no reason upon thirty (30) calendar days' prior written notice to the other Party. If terminated by the Grantee, Grantee must include the reasons for such termination, the effective date, and, in the case of a partial termination, the portion to be terminated. If Grantor determines in the case of a partial termination that the reduced or modified portion of the Award will not accomplish the purposes for which the Award was made, Grantor may terminate the Agreement in its entirety. 2 CFR 200.339(a)(4).

(b) This Agreement may be terminated, in whole or in part, by Grantor without advance notice:

(i) Pursuant to a funding failure under Paragraph 4.1;

(ii) If Grantee fails to comply with the terms and conditions of this or any Award, application or proposal, including any applicable rules or regulations, or has made a false representation in connection with the receipt of this or any Grant;

(iii) For cause, which may render the Grantee ineligible for consideration for future grants from the Grantor or other State agencies; or

(iv) If Grantee breaches this Agreement and either (1) fails to cure such breach within 15 calendar days' written notice thereof, or (2) if such cure would require longer than 15 calendar days and the Grantee has failed to commence such cure within 15 calendar days' written notice thereof. In the event that Grantor terminates this Agreement as a result of the breach of the Agreement by Grantee, Grantee shall be paid for work satisfactorily performed prior to the date of termination.

16.2. Suspension. Grantor may suspend this Agreement, in whole or in part, pursuant to a funding failure under Paragraph 4.1 or if the Grantee fails to comply with terms and conditions of this or any Award. If suspension is due to Grantee's failure to comply, Grantor may withhold further payment and prohibit Grantee from incurring additional obligations pending corrective action by Grantee or a decision to terminate this Agreement by Grantor. Grantor may determine to allow necessary and proper costs that Grantee could not reasonably avoid during the period of suspension.

16.3. Non-compliance. If Grantee fails to comply with applicable statutes, regulations or the terms and conditions of this or any Award, Grantor may impose additional conditions on Grantee, as described in 2 CFR 200.207. If Grantor determines that non-compliance cannot be remedied by imposing additional conditions, Grantor may take one or more of the actions described in 2 CFR 200.338. The Parties shall follow all Grantor policies and procedures regarding non-compliance, including, but not limited to, the procedures set forth in the State of Illinois Grantee Compliance Enforcement System. 44 Ill. Admin. Code 7000.80, 7000.260.

16.4. Objection. If Grantor suspends or terminates this Agreement, in whole or in part, for cause, or takes any other action in response to Grantee's non-compliance, Grantee may avail itself of any opportunities to object and challenge such suspension, termination or other action by Grantor in accordance with any applicable processes and procedures, including, but not limited to, the procedures set forth in the State of Illinois Grantee Compliance Enforcement System. 2 CFR 200.341: 44 Ill. Admin. Code 7000.80, 7000.260.

16.5. Effects of Suspension and Termination.

(a) Grantor may credit Grantee for expenditures incurred in the performance of authorized services under this Agreement prior to the effective date of a suspension or termination.

(b) Grantee shall not incur any costs or obligations that require the use of these Grant Funds after the effective date of a suspension or termination, and shall cancel as many outstanding obligations as possible.

(c) Costs to Grantee resulting from obligations incurred by Grantee during a suspension or after termination of the Agreement are not allowable unless:

(i) Grantor expressly authorizes them in the notice of suspension or termination; and

(ii) The costs result from obligations properly incurred before the effective date of suspension or termination, are not in anticipation of the suspension or termination, and the costs would be allowable if the Agreement was not suspended or terminated. 2 CFR 200.342.

16.6. Close-out of Terminated Agreements. If this Agreement is terminated, in whole or in part, the Parties shall comply with all close-out and post-termination requirements of this Agreement. 2 CFR 200.339(c).

ARTICLE XVII
SUBCONTRACTS/SUB-GRANTS

17.1. Sub-recipients/Delegation. Grantee may not subcontract nor sub-grant any portion of this Agreement nor delegate any duties hereunder without Prior Approval of Grantor. The requirement for Prior Approval is satisfied if the subcontractor or sub-grantee has been identified in the Uniform Grant Application, such as, without limitation, a Project Description, and Grantor has approved.

17.2. Application of Terms. Grantee shall advise any sub-grantee of funds awarded through this Agreement of the requirements imposed on them by Federal and State laws and regulations, and the provisions of this Agreement. In all agreements between Grantee and its sub-grantees, Grantee shall insert term(s) that require that all sub-grantees adhere to the terms of this Agreement.

ARTICLE XVIII
NOTICE OF CHANGE

18.1. Notice of Change. Grantee shall notify the Grantor if there is a change in Grantee's legal status, Federal employer identification number (FEIN), DUNS number, SAM registration status, Related Parties, or address. *See* 30 ILCS 708/60(a). If the change is anticipated, Grantee shall give thirty (30) days' prior written notice to Grantor. If the change is unanticipated, Grantee shall give notice as soon as practicable thereafter. Grantor reserves the right to take any and all appropriate action as a result of such change(s).

18.2. Failure to Provide Notification. To the extent permitted by Illinois law, Grantee shall hold harmless Grantor for any acts or omissions of Grantor resulting from Grantee's failure to notify Grantor of these changes.

18.3. Notice of Impact. Grantee shall immediately notify Grantor of any event that may have a material impact on Grantee's ability to perform this Agreement.

18.4. Circumstances Affecting Performance; Notice. In the event Grantee becomes a party to any litigation, investigation or transaction that may reasonably be considered to have a material impact on Grantee's ability to perform under this Agreement, Grantee shall notify Grantor, in writing, within five (5) calendar days of determining such litigation or transaction may reasonably be considered to have a material impact on the Grantee's ability to perform under this Agreement.

18.5. Effect of Failure to Provide Notice. Failure to provide the notice described in Paragraph 18.4 shall be grounds for immediate termination of this Agreement and any costs incurred after notice should have been given shall be disallowed.

ARTICLE XIX
STRUCTURAL REORGANIZATION

19.1. Effect of Reorganization. Grantee acknowledges that this Agreement is made by and between Grantor and Grantee, as Grantee is currently organized and constituted. No promise or undertaking made hereunder is an assurance that Grantor agrees to continue this Agreement, or any license related thereto, should Grantee significantly reorganize or otherwise substantially change the character of its corporate structure, business structure or governance structure. Grantee agrees that it will give Grantor prior notice of any such action

or changes significantly affecting its overall structure and will provide any and all reasonable documentation necessary for Grantor to review the proposed transaction including financial records and corporate and shareholder minutes of any corporation which may be involved. This ARTICLE XIX does not require Grantee to report on minor changes in the makeup of its governance structure. Nevertheless, **PART TWO** or **PART THREE** may impose further restrictions. Failure to comply with this ARTICLE XIX shall constitute a material breach of this Agreement.

ARTICLE XX
AGREEMENTS WITH OTHER STATE AGENCIES

20.1. Copies upon Request. Grantee shall, upon request by Grantor, provide Grantor with copies of contracts or other agreements to which Grantee is a party with any other State agency.

ARTICLE XXI
CONFLICT OF INTEREST

21.1. Required Disclosures. Grantee must immediately disclose in writing any potential or actual Conflict of Interest to the Grantor. 2 CFR 200.112 and 44 Ill. Admin. Code 7000.40(b)(3).

21.2. Prohibited Payments. Grantee agrees that payments made by Grantor under this Agreement will not be used to compensate, directly or indirectly, any person currently holding an elective office in this State including, but not limited to, a seat in the General Assembly. In addition, where the Grantee is not an instrumentality of the State of Illinois, as described in this Paragraph, Grantee agrees that payments made by Grantor under this Agreement will not be used to compensate, directly or indirectly, any person employed by an office or agency of the State of Illinois whose annual compensation is in excess of sixty percent (60%) of the Governor's annual salary, or $106,447.20 (30 ILCS 500/50-13). An instrumentality of the State of Illinois includes, without limitation, State departments, agencies, boards, and State universities. An instrumentality of the State of Illinois does not include, without limitation, municipalities and units of local government and related entities. 2 CFR 200.64.

21.3. Request for Exemption. Grantee may request written approval from Grantor for an exemption from Paragraph 21.2. Grantee acknowledges that Grantor is under no obligation to provide such exemption and that Grantor may, if an exemption is granted, grant such exemption subject to such additional terms and conditions as Grantor may require.

ARTICLE XXII
EQUIPMENT OR PROPERTY

22.1. Transfer of Equipment. Grantor shall have the right to require that Grantee transfer to Grantor any equipment, including title thereto, purchased in whole or in part with Grantor funds, if Grantor determines that Grantee has not met the conditions of 2 CFR 200.439(a). Grantor shall notify Grantee in writing should Grantor require the transfer of such equipment. Upon such notification by Grantor, and upon receipt or delivery of such equipment by Grantor, Grantee will be deemed to have transferred the equipment to Grantor as if Grantee had executed a bill of sale therefor.

22.2. Prohibition against Disposition/Encumbrance. The Grantee is prohibited from, and may not sell,

transfer, encumber (other than original financing) or otherwise dispose of said equipment, material, or real property during the Grant Term without Prior Approval of Grantor. Any real property acquired using Grant Funds must comply with the requirements of 2 CFR 200.311.

22.3 Equipment and Procurement. Grantee must comply with the uniform standards set forth in 2 CFR 200.310–200.316 governing the management and disposition of property which cost was supported by Grant Funds. Any waiver from such compliance must be granted by either the President's Office of Management and Budget, the Governor's Office of Management and Budget, or both, depending on the source of the Grant Funds used. Additionally, Grantee must comply with the standards set forth in 2 CFR 200.317-200.326 for use in establishing procedures for the procurement of supplies and other expendable property, equipment, real property and other services with Grant Funds. These standards are furnished to ensure that such materials and services are obtained in an effective manner and in compliance with the provisions of applicable Federal and State statutes and executive orders.

22.4 Equipment instructions. Grantee must obtain disposition instructions from Grantor when equipment purchased in whole or in part with Grant Funds are no longer needed for their original purpose. The Grantee shall properly maintain, track, use, store and insure the equipment according to applicable best practices, manufacturer's guidelines, federal and state laws or rules, and Grantor requirements stated herein.

ARTICLE XXIII
PROMOTIONAL MATERIALS; PRIOR NOTIFICATION

23.1. Publications, Announcements, etc. Use of Grant Funds for promotions is subject to the prohibitions for advertising or public relations costs in 2 CFR 200.421(e). In the event that Grantor funds are used in whole or in part to produce any written publications, announcements, reports, flyers, brochures or other written materials, Grantee shall obtain Prior Approval for the use of those funds (2 CFR 200.467) and agrees to include in these publications, announcements, reports, flyers, brochures and all other such material, the phrase "Funding provided in whole or in part by the [Grantor]." Exceptions to this requirement must be requested, in writing, from Grantor and will be considered authorized only upon written notice thereof to Grantee.

23.2. Prior Notification/Release of Information. Grantee agrees to notify Grantor ten (10) days prior to issuing public announcements or press releases concerning work performed pursuant to this Agreement, or funded in whole or in part by this Agreement, and to cooperate with Grantor in joint or coordinated releases of information.

ARTICLE XXIV
INSURANCE

24.1. Maintenance of Insurance. Grantee shall maintain in full force and effect during the Term of this Agreement casualty and bodily injury insurance, as well as insurance sufficient to cover the replacement cost of any and all real or personal property, or both, purchased or, otherwise acquired, or improved in whole or in part, with funds disbursed pursuant to this Agreement. 2 CFR 200.310. Additional insurance requirements may be detailed in **PART TWO** or **PART THREE**.

24.2. Claims. If a claim is submitted for real or personal property, or both, purchased in whole with funds from this Agreement and such claim results in the recovery of money, such money recovered shall be surrendered to Grantor.

ARTICLE XXV
LAWSUITS

25.1. Independent Contractor. Neither Grantee nor any employee or agent of Grantee acquires any employment rights with Grantor by virtue of this Agreement. Grantee will provide the agreed services and achieve the specified results free from the direction or control of Grantor as to the means and methods of performance. Grantee will be required to provide its own equipment and supplies necessary to conduct its business; provided, however, that in the event, for its convenience or otherwise, Grantor makes any such equipment or supplies available to Grantee, Grantee's use of such equipment or supplies provided by Grantor pursuant to this Agreement shall be strictly limited to official Grantor or State of Illinois business and not for any other purpose, including any personal benefit or gain.

25.2. Liability. Neither Party shall be liable for actions chargeable to the other Party under this Agreement including, but not limited to, the negligent acts and omissions of Party's agents, employees or subcontractors in the performance of their duties as described under this Agreement, unless such liability is imposed by law. This Agreement shall not be construed as seeking to enlarge or diminish any obligation or duty owed by one Party against the other or against a third party.

ARTICLE XXVI
MISCELLANEOUS

26.1. Gift Ban. Grantee is prohibited from giving gifts to State employees pursuant to the State Officials and Employees Ethics Act (5 ILCS 430/10-10) and Executive Order 15-09.

26.2. Access to Internet. Grantee must have Internet access. Internet access may be either dial-up or high-speed. Grantee must maintain, at a minimum, one business e-mail address that will be the primary receiving point for all e-mail correspondence from Grantor. Grantee may list additional e-mail addresses at any time during the Term of this Agreement. The additional addresses may be for a specific department or division of Grantee or for specific employees of Grantee. Grantee must notify Grantor of any e-mail address changes within five (5) business days from the effective date of the change.

26.3. Exhibits and Attachments. **Exhibits A** through **G**, **PART TWO**, **PART THREE**, if applicable, and all other exhibits and attachments hereto are incorporated herein in their entirety.

26.4. Assignment Prohibited. Grantee acknowledges that this Agreement may not be sold, assigned, or transferred in any manner by Grantee, to include an assignment of Grantee's rights to receive payment hereunder, and that any actual or attempted sale, assignment, or transfer by Grantee without the Prior Approval of Grantor in writing shall render this Agreement null, void and of no further effect.

26.5. Amendments. This Agreement may be modified or amended at any time during its Term by mutual consent of the Parties, expressed in writing and signed by the Parties.

26.6. Severability. If any provision of this Agreement is declared invalid, its other provisions shall not be affected thereby.

26.7. No Waiver. No failure of either Party to assert any right or remedy hereunder will act as a waiver of either Party's right to assert such right or remedy at a later time or constitute a course of business upon which

either Party may rely for the purpose of denial of such a right or remedy.

26.8. Applicable Law; Claims. This Agreement and all subsequent amendments thereto, if any, shall be governed and construed in accordance with the laws of the State of Illinois. Any claim against Grantor arising out of this Agreement must be filed exclusively with the Illinois Court of Claims. 705 ILCS 505/1 *et seq.* Grantor does not waive sovereign immunity by entering into this Agreement.

26.9. Compliance with Law. This Agreement and Grantee's obligations and services hereunder are hereby made and must be performed in compliance with all applicable Federal and State laws, including, without limitation, Federal regulations, State administrative rules, including 44 Ill. Admin. Code 7000, and any and all license requirements or professional certification provisions.

26.10. Compliance with Confidentiality Laws. If applicable, Grantee shall comply with applicable State and Federal statutes, Federal regulations and Grantor administrative rules regarding confidential records or other information obtained by Grantee concerning persons served under this Agreement. The records and information shall be protected by Grantee from unauthorized disclosure.

26.11. Compliance with Freedom of Information Act. Upon request, Grantee shall make available to Grantor all documents in its possession that Grantor deems necessary to comply with requests made under the Freedom of Information Act. (5 ILCS 140/7(2)).

26.12. Precedence. In the event there is a conflict between this Agreement and any of the exhibits or attachments hereto, this Agreement shall control. In the event there is a conflict between **PART ONE** and **PART TWO** or **PART THREE** of this Agreement, **PART ONE** shall control. In the event there is a conflict between **PART TWO** and **PART THREE** of this Agreement, **PART TWO** shall control. In the event there is a conflict between this Agreement and relevant statute(s) or Administrative Rule(s), the relevant statute(s) or rule(s) shall control.

26.13. Illinois Grant Funds Recovery Act. In the event of a conflict between the Illinois Grant Funds Recovery Act and the Grant Accountability and Transparency Act, the provisions of the Grant Accountability and Transparency Act shall control. 30 ILCS 708/80.

26.14. Headings. Article and other headings contained in this Agreement are for reference purposes only and are not intended to define or limit the scope, extent or intent of this Agreement or any provision hereof.

26.15. Entire Agreement. Grantee and Grantor acknowledge that this Agreement constitutes the entire agreement between them and that no promises, terms, or conditions not recited, incorporated or referenced herein, including prior agreements or oral discussions, shall be binding upon either Grantee or Grantor.

26.16. Counterparts. This Agreement may be executed in one or more counterparts, each of which shall be considered to be one and the same agreement, binding on all Parties hereto, notwithstanding that all Parties are not signatories to the same counterpart. Duplicated signatures, signatures transmitted via facsimile, or signatures contained in a Portable Document Format (PDF) document shall be deemed original for all purposes.

26.17. Attorney Fees and Costs. Unless prohibited by law, if Grantor prevails in any proceeding to enforce the terms of this Agreement, including any administrative hearing pursuant to the Grant Funds Recovery Act or the Grant Accountability and Transparency Act, the Grantor has the right to recover reasonable attorneys' fees, costs and expenses associated with such proceedings.

THE REMAINDER OF THIS PAGE IS INTENTIONALLY LEFT BLANK.

EXHIBIT A

PROJECT DESCRIPTION

The Grantor has been awarded funds from the Federal Emergency Management Agency (FEMA) under the FFY 2019 Homeland Security Grant Program (HSGP). The purpose of the FFY 2019 HSGP is to support state and local efforts to prevent terrorism and other catastrophic events and to prepare the Nation for the threats and hazards that pose the greatest risk to the security of the United States. The HSGP provides funding to implement investments that build, sustain, and deliver the 32 core capabilities essential to achieving the National Preparedness Goal of a secure and resilient Nation. The Grantee will utilize the HSGP grant funds in accordance with this purpose as outlined within the Grantee's approved FFY 2019 Attachment A.

EXHIBIT B

DELIVERABLES OR MILESTONES

Deliverables are directly related to the successful completion of the expenditures and projects listed in the approved Budget Detail Worksheet and Project Implementation Worksheet.

The Budget Detail Worksheet in Attachment A outlines the expenditures for which the Grantee will seek reimbursement. The Grantor will only reimburse those expenditures that specifically listed in the Budget Detail Worksheet. If the Grantee has included personnel expenses in its Budget Detail Worksheet, the Grantee is prohibited from incurring any costs for such personnel expenses until the Grantor provides written approval to the Grantee that DHS FEMA GPD has waived grant limitations on personnel costs.

The Project Implementation Worksheet in Attachment A provides a detailed description of the scope of work to be performed using funds received through this Agreement, including a list of specific outcomes and sequential milestones that will be accomplished by the Grantee. These milestones will allow the Grantor to measure progress of the Grantee in achieving the goals of the project.

EXHIBIT C

PAYMENT

The Grantee's total compensation and reimbursement shall not exceed the sum of $41,511,363.09.

The Grantee must submit reports or vendor invoices with description of costs, including a statement of payment for personnel costs and affirmation or evidence of delivery and property identification numbers for property subject to the Grantor's policies and procedures, in order to receive compensation through this Agreement. Such reports and invoices must be submitted to the Grantor in accordance with the Grantor's policy and in no event later than 30 days following the expiration of this Agreement. The method of compensation shall be reimbursement in accordance with the invoice voucher procedures of the Office of the State of Illinois Comptroller. The Grantor will not reimburse the Grantee for any exercise expenditures unless and until an After Action Report/Improvement Plan is submitted in accordance herein. The Grantee shall maintain appropriate records of actual costs incurred and submit expenditure information to the Grantor.

EXHIBIT D

CONTACT INFORMATION

CONTACT FOR NOTIFICATION:

Unless specified elsewhere, all notices required or desired to be sent by either Party shall be sent to the persons listed below.

GRANTOR CONTACT

Name: Bob P. Evans

Title: Grant Program Manager

Address: 2300 South Dirksen Parkway

62703

Phone: 217/557-4788

E-mail Address: Bob.P.Evans@illinois.gov

GRANTEE CONTACT

Name: Natalie Gutierrez

Title: Deputy Director of Grants

Address: 1411 West Madison Street, Springfield, IL

Chicago, IL 60602

Phone: 312/746-9434

E-mail Address: Natalie.Gutierrez@cityofchicago.org

EXHIBIT E

PERFORMANCE MEASURES

The Grantee shall provide a quarterly update of the Project Implementation Worksheet in Attachment A to IEMA within fifteen (15) business days after March 31, June 30, September 30, and December 31 throughout the performance period of the Agreement.

The Grantee must submit a final Budget Detail Worksheet, Discipline Allocation Worksheet, and Project Implementation Worksheet to the Grantor within 30 days after the expiration of the Agreement.

The Grantee also must submit a final After Action Report/Improvement Plan to the Grantor within 45 days after each exercise. All exercises conducted with funds provided through this Agreement must be National Incident Management System (NIMS) compliant and be managed and executed in accordance with the Homeland Security Exercise and Evaluation Program (HSEEP).

EXHIBIT F

PERFORMANCE STANDARDS

Performance standards include:

1. Appropriate use of grant funds in accordance with the approved scope of work and budget, and the terms outlined in this Agreement.

2. The timely submittal of required documentation as defined in Exhibit E of this Agreement.

3. Adequate results from grant monitoring conducted by the Grantor.

EXHIBIT G

SPECIFIC CONDITIONS

None.

PART TWO – THE GRANTOR-SPECIFIC TERMS

In addition to the uniform requirements in **PART ONE**, the Grantor has the following additional requirements for its Grantee:

None.

PART THREE – THE PROJECT-SPECIFIC TERMS

In addition to the uniform requirements in **PART ONE** and the Grantor-Specific Terms in **PART TWO**, the Grantor has the following additional requirements for this Project:

1. All allocations and use of funds by the Grantee shall be in accordance with the applicable notice of funding opportunity and the requirements set forth therein. The Grantee shall comply with all applicable federal and state statutes, regulations, executive orders, and other policies and requirements in carrying out any project supported by these funds. The Grantee recognizes that laws, regulations, policies, and administrative practices may be modified from time to time and those modifications may affect project implementation. The Grantee agrees that the most recent requirements will apply during the performance period of this Agreement.

2. All subawards issued by the Grantee to this Agreement in excess of $25,000.00 must be pre-approved by IEMA.

3. The Grantee is required to maintain adoption and implementation of the National Incident Management System.

4. The Grantee will provide all necessary financial and managerial resources to meet the terms and conditions of this Agreement.

5. Funds under this award may supplement, but shall not supplant, state or local funds budgeted for the same purposes. The Grantee may be required to demonstrate and document that a reduction in non-federal resources occurred for reasons other than the receipt or expected receipt of federal funds.

6. The Grantee shall not undertake any project having the potential to impact EHP resources or initiate procurement without the prior approval of FEMA, including but not limited to construction of communication towers, modification or renovation of existing buildings, structures and facilities, or new construction including replacement of facilities. The EHP review process involves the submission of a detailed project description along with supporting documentation, so that FEMA may determine whether the proposed project has the potential to impact environmental resources and/or historic properties. In some cases, DHS/FEMA is also required to consult with other regulatory agencies and the public to complete the review process. The EHP review process must be completed and approved before costs are incurred to carry out the proposed project The Grantee must comply with all conditions placed on the project as the result of the EHP review. Any change to the approved project scope of work will require re-evaluation for compliance with these EHP requirements. If ground-disturbing activities occur during project implementation, the Grantee must ensure monitoring of ground disturbance, and if any potential archeological resources are discovered, the Grantee will immediately cease construction in that area and notify FEMA and the appropriate State Historic Preservation Office. Any activities that have been initiated without the necessary EHP review and approval will result in a non-compliance finding and will not be eligible for FEMA funding.

7. The Grantee shall affix the applicable copyright notice of 17 USC 401 or 402 and an acknowledgement of U.S. Government sponsorship (including the award number) to any work first produced under this grant.

8. The Grantee shall acknowledge their use of federal funding when issuing statements, press releases, requests for proposals, bid invitations, and other documents describing projects or programs funded in whole or in part with federal funds.

9. The Grantee shall use, manage, and dispose of equipment acquired under this Agreement in accordance with federal and state laws, procedures, and policies. All equipment purchased with funding received through this Agreement shall be used for the entire useful life of the equipment in accordance with the purpose stated in Attachment A. When original or replacement equipment under this grant is no longer needed for the original project or programs, the Grantee shall request disposition instructions from the Grantor pursuant to 2 CFR 200.313.

10. If the Grantee collects PII, the Grantee is required to have a publicly-available privacy policy that describes what PII it collects, how it uses PII, whether it shares PII with third parties, and how individuals may have their PII corrected where appropriate.

11. The Grantee must obtain the approval of DHS prior to using a DHS or United States Coast Guard seal, logo, crest, or reproduction of flags or likenesses of DHS agency or Coast Guard officials.

12. If funding will be used to purchase emergency communications equipment or to fund related activities, the Grantee shall comply with the SAFECOM Guidance for Emergency Communication Grants, including provisions on technical standards that ensure and enhance interoperable communications.



Archer® 1200 Vehicle Barrier

An unanchored "drop-and-stop" barrier for rapid deployment on roadways and hard surfaces.

Best-in-class for Hostile Vehicle Mitigation (HVM), MERIDIAN's Archer 1200 Vehicle Barriers fill a specific need that is simply unmatched by anything currently on the market. Strength and flexibility make them a vital component of your overall securityplan. MERIDIAN's ultimate rapidly deployable Archer 1200 Barrier can augment fixed-in-place HVM (Hostile Vehicle Mitigation) barriers or be utilized as a primary security system for entry points, roadways and perimeters.

PRODUCT FEATURES

RAPID DEPLOYMENT, MODULAR DESIGN

Archer 1200 Vehicle Barriers provide drop and stop convenience with no heavy equipment required.

- Allows for one-person deployment of an 8 barrier trailer kit in under 10 minutes.
- Permits pedestrian and emergency vehicle access without moving a barrier.
- Archer Hauler allows for easy movement of barriers by adults of any stature.
- No maintenance, electricity, hydraulics or batteries required.
- Full ballistic protection for any armor piercing 50 caliber rounds.

REUSABLE

Unlike fixed bollards, our barriers are non-lethal to the driver and minimize shrapnel spray. They are 100% reusable after impact and have a lifetime warranty.

FEATURES & SPECIFICATIONS

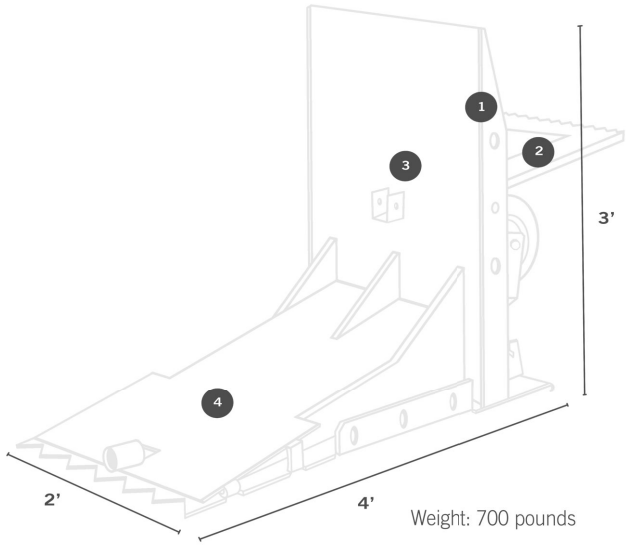

Weight: 700 pounds

1. Archer 1200s can be connected into sets of two or more barriers.
2. Heavy-duty back plates dig in to force barrier into the vehicle.
3. Barriers feature ballistic-rated front plate and back gusset.
4. Ramped front plate levers into vehicle undercarriage.

CERTIFICATIONS

U.S. DEPARTMENT OF HOMELAND SECURITY CERTIFIED SAFETY ACT www.safetyact.gov SCIENCE AND TECHNOLOGY

IWA 14 IMPACT TESTED

PAS 68 BSI IMPACT TESTED

ASTM

ISO

MERIDIAN® RAPID DEFENSE GROUP | www.meridian-barrier.com



ARCHER DROP-DECK TRAILER

Mobile deployment in minutes. Custom built to load and haul up to eight Archer 1200 Barriers, making barrier deployment fast and easy.

The Archer Drop-Deck Trailer from MERIDIAN ensures Archer 1200 Mobile Barriers can be deployed in under ten minutes. To transport and deploy the equipment, the Archer Drop-Deck Trailer lowers to the ground, allowing the Archer 1200 Barriers to roll off at street level and eliminating the need for fork lifts or heavy equipment. Once the trailer is lowered to the ground take the Archer Hauler and off load the barriers one at a time. This trailer allows for single-person deployment, making this the perfect trailer for mobile barrier deployment in Hostile Vehicle Mitigation.

PRODUCT DETAILS

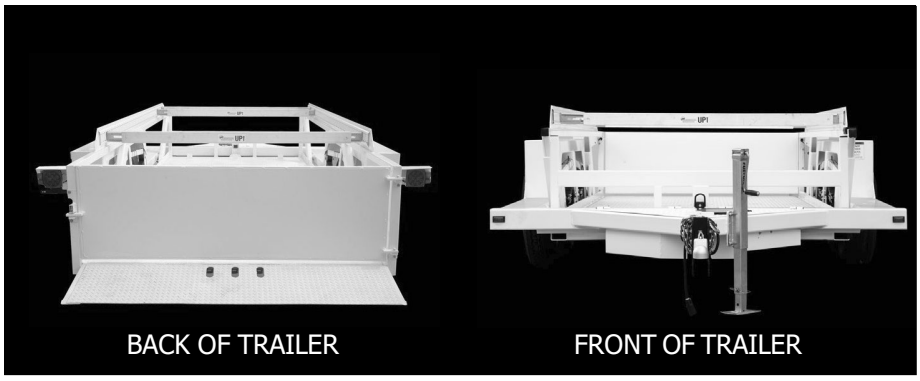

BACK OF TRAILER

FRONT OF TRAILER

Carrying Capacity	9,000 lbs.
Trailer Weight (empty)	3,900 lbs.
Deck Width	75 in.
Deck Length	16 ft. (including ramp)
Overall Width	102 in.
Overall Length	21 ft.
Axle	Tandem
Wheel Size	16 in.
Brakes	Electric
Coupler	2-5/16 in. ball

FEATURES

- » Ground-Level Loading
- » Heavy-Duty Diamond Steel Deck
- » Rubber Suspension
- » Adjustable Safety Chains
- » 7-Pin RV-Style Plug
- » 24’ Side-Swing Tailgate
- » 10’ Storage Compartment
- » E-Track System
- » 3 Shoring Bars
- » Solar Battery Charger
- » Remote Control
- » LED Lights
- » Powder Coat Paint
- » 16” F-Rated Wheels

Chassis: The chassis has no cross members, which allows the loading deck to be lowered completely to the ground. The "A" frame tongue design features a 10" built-in lockable storage compartment on one side and the battery, hydraulic tank/pump and controls on the other side. A 7,000 lb. "quick adjust" jack is mounted on the tongue.

Loading Deck: The deck features an extra heavy-duty 3/16" thick diamond steel floor plate with a permanent 18" ramp at the rear and a 24" side-swinging removable tailgate. Attached to the two side rails are E-track rails with three snap-in shoring bars for locking barriers into place.

Loading Operation: The deck is designed so that it can be raised or lowered hydraulically and remains level throughout its travel. Barriers are moved onto the deck at ground level, then raised to full travel position in less than 30 seconds. In the travel position, the deck automatically locks for additional safety while towing.

Hydraulic System: All hydraulic components are located inside the A-frame compartment. The hydraulic motor only runs during the raising of the deck, which is lowered through a gravity return. The hydraulic motor is a DC–12V powered by a 12 volt DC batter mounted inside the compartment.



MERIDIAN®'s SAFETY Act Designations

Awards by the U.S. Department of Homeland Security:

The SAFETY Act
DESIGNATION as QUALIFIED ANTI-TERRORISM TECHNOLOGY (QATT)
CERTIFICATION for APPROVED PRODUCTS LIST FOR U.S. DEPARTMENT OF HOMELAND SECURITY

MERIDIAN® Rapid Defense Group has been awarded the highest official recognitions, accreditations and approvals by the U.S. Department of Homeland Security (DHS) pursuant to The SAFETY Act.

The SAFETY Act creates a liability management system for providers of approved anti-terrorism technologies and products. The SAFETY Act protects MERIDIAN®, its customers, and users of its products from liabilities for claims arising out of an act of terrorism. In the almost twenty-year history of The SAFETY Act, only about 1000 companies have been granted these invaluable protections backed up the U.S. Government.

PRODUCTS

The MERIDIAN® products and technology covered by these elite awards are the Archer® 1200 Barrier, Archer® Field Tow Bar, and Archer® Hauler. These products and technology form the core of MERIDIAN®'s anti-terrorist vehicle protections and solutions. Use of these Best-in-Industry MERIDIAN® products affords the customer or user the extraordinary SAFETY Act protections from liabilities resulting from acts of terrorism.

CUSTOMERS

The protections awarded to MERIDIAN® under The SAFETY Act extend to and flow down to all MERIDIAN® customers, suppliers, vendors, users and others in its supply chain from third party claims related to any act of terrorism as determined by DHS. These protections by the U.S. Federal Government are extended to both U.S. and international customers. They also cover acts of terrorism that occur or originate within or outside of the U.S.

COVERAGE

The protections are truly extraordinary in substance and process. Customers of MERIDIAN® are immune from liability for the use of MERIDIAN® DESIGNATED and CERTIFIED products and technology. MERIDIAN®'s liability is strictly limited to its approved insurance coverage. All claims arising from a terrorist act in any way allegedly involving or impacting MERIDIAN® and its products may only be brought in U.S. Federal Courts. All claims for punitive damages and noneconomic damages are barred.

What this means is that MERIDIAN® will not be destroyed by either the amount of claims or the costs of defending against such claims. MERIDIAN® cannot be forced into faraway courts in another country. MERIDIAN® will be there to service and provide to its customers before and after any act of terrorism. And MERIDIAN®'s customers will also be protected from liability in U.S. Federal Courts with these protections backed up by the obligations of the U.S. Government as established in the formal laws of the U.S. under The SAFETY Act.

MERIDIAN® has been specifically authorized by DHS on behalf of the U.S. Government to inform you—the customers, clients, subcontractors, vendors, and users of MERIDIAN®'s Qualified Anti-Terrorism Technology—that you are immune from liability and claims of liability arising from acts of terrorism. DHS has backed up this message by also specifically authorizing our display of the official marks for DESIGNATION and CERTIFICATIONS under The SAFETY Act as set forth above.

MERIDIAN RAPID DEFENSE GROUP PRODUCT PRICING CATALOG - 2022

ARCHER 1200 BARRIER	PRODUCT DESCRIPTION	COO	GSA
 MFR Part Number : AB1200	An unanchored “drop-and-stop” vehicle barrier for rapid deployment on roadways and hard surfaces. MERIDIAN’s ultimate rapidly deployable Archer 1200 Barrier can augment fixed-in-place HVM (Hostile Vehicle Mitigation) barriers or be utilized as a primary security system for entry points, roadways and perimeters. Manufactured of high strength, ballistic rated steel, the Archer 1200 Barrier is easily installed by one person without the need for cranes, heavy equipment, electricity or hydraulics. Simply off-load and place the barriers — no anchors or assembly are required. The Archer 1200 Barrier is an ideal application for: • areas of mass gatherings • campuses • stadiums and sports arenas • police and fire departments • military bases and installations • industrial plants • transportation centers • financial facilities and offices.	USA	$6,513.75

ARCHER MANUAL HAULER 2.0	PRODUCT DESCRIPTION	COO	GSA
 MFR Part Number : AMHA003-2	The newest and most advanced MERIDIAN Hauler has all the hallmarks of MERIDIAN’s products - maintenance free and one-person ease of use. The Hauler is a rugged barrier dolly that can traverse a variety of surfaces from asphalt to gravel to unimproved dirt roads. The Hauler features a 3,000 lb. rated jack and high strength steel tube construction. The new upgraded leverage action is simple in that it only requires the placement of the extension rod into the barrier receiver and locking the pin in place. Once the leverage Hauler is secured, then a simple swing-action moves the barrier into position. Safety is the key so when lifting the barrier the leverage action is fast up and slow down with the all-purpose brake being deployed.	USA	$1,925.18

MERIDIAN 8-BARRIER DROP DECK TRAILER	PRODUCT DESCRIPTION	COO	GSA
 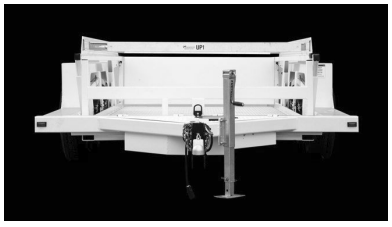 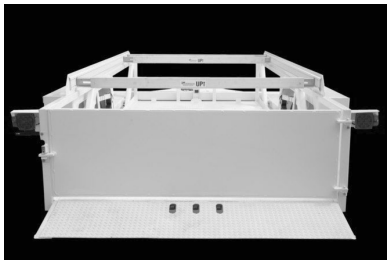 MFR Part Number : ADDT008	The MERIDIAN 8-Barrier Drop Deck Trailer ensures Archer 1200 Mobile Barriers can be deployed in under ten minutes. To transport and deploy the equipment, the MERIDIAN Drop-Deck Trailer lowers to the ground, allowing the Archer 1200 Barriers to roll off at street level and eliminates the need for fork lifts or heavy equipment. Once the trailer is lowered to the ground take the Archer Hauler and off load the barriers one at a time. This trailer allows for single-person deployment. The chassis has no cross members, which allows the loading deck to be lowered completely to the ground. The "A" frame tongue design features a 10" built-in lockable storage compartment on one side and the battery, hydraulic tank/pump and controls on the other side. A 7,000 lb. "quick adjust" jack is mounted on the tongue. The deck is designed so that it can be raised or lowered hydraulically and remains level throughout its travel. Barriers are moved onto the deck at ground level, then raised to full travel position in less than 30 seconds. In the travel position, the deck automatically locks for additional safety while towing. The deck features an extra heavy-duty 3/16" thick diamond steel floor plate with a permanent 18" ramp at the rear and a 24" side-swinging removable tailgate. Attached to the two side rails are E-track rails with three snap-in shoring bars for locking barriers into place. All hydraulic components are located inside the A-frame compartment. The hydraulic motor only runs during the raising of the deck, which is lowered through a gravity return. The hydraulic motor is a DC–12V powered by a 12 volt DC batter mounted inside the compartment.	USA	$23,155.18

ARCHER BEAM GATE 2.0	PRODUCT DESCRIPTION	COO	GSA
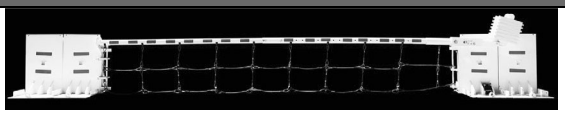  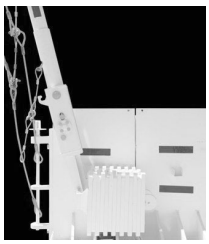 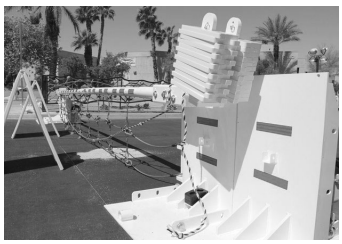 MFR Part Number : ABG001-2	The Archer Beam Gate is the easiest active protection and check point gate to deliver, set up, and install. Its patented design can be a standalone product or when used with Archer 1200 Barriers can be extended for greater lineage coverage or with expansive configurations. The Archer Beam Gate is ideal for events, check points, construction sites, and command center egresses. The Beam Gate can be expanded from 14 to 20 feet using adjustable netting. The deployment and operation of the Beam Gate requires no electricity or hydraulics, is easily deployable in one hour and is easily transportable to multiple locations. It affords maximum flexibility to meet the unique requirements of the facility and space, and can be maintained easily and inexpensively by one person. Incorporated into the Archer Beam Gate are the technical specifications of: 2 Archer 1200 Barriers, one pivot arm barrier, an Archer Dolly and Counterweights, a Wayfinding Topper, one receiver barrier, two beams and one netting (see additional netting options). For maneuverability of the Archer Beam Gate the purchase of use of the Archer Manual Hauler is strongly recommended.	USA	$48,245.18
ARCHER FIELD TOW BAR	PRODUCT DESCRIPTION	COO	GSA
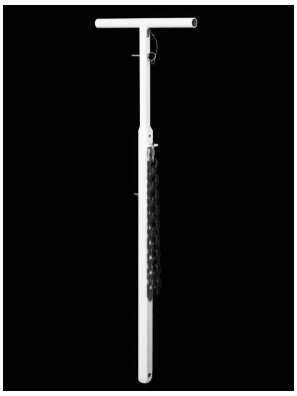 MFR Part Number : AFTB001	A reciprocal handled, levered towing tool with variable height adjustment and two point, rapid connection interface. The tow bar's easy grip handles allows one- or two- person teams to easily position the barriers in place. The portable tow bar separates into two pieces which can be secured for storage on any Archer 1200 Barrier.	USA	$574.18
ARCHER ARRESTOR CABLE – 4 FT.	PRODUCT DESCRIPTION	COO	GSA
 MFR Part Number : AAC4F001	MERIDIAN Arrestor Cables use technology from aircraft carriers to absorb the kinetic energy of a moving vehicle and pull the barriers into play for vehicle mitigation without loss of life. They are attached to barriers in 4- foot or 10-foot segments and can be up to 3-ply across a barrier span (3 cables strung between two barriers).	USA	$574.18
ARCHER ARRESTOR CABLE – 10 FT.	PRODUCT DESCRIPTION	COO	GSA
 MFR Part Number : AAC10F001	MERIDIAN Arrestor Cables use technology from aircraft carriers to absorb the kinetic energy of a moving vehicle and pull the barriers into play for vehicle mitigation without loss of life. They are attached to barriers in 4-foot or 10-foot segments and can be up to 3-ply across a barrier span (3 cables strung between two barriers). The 10-foot cables are designed to be detached to allow emergency vehicle entry if required.	USA	$670.68

ARCHER 8-BARRIER TRAILER KIT	PRODUCT DESCRIPTION	COO	GSA
 MFR Part Number : ATRKIT008	MERIDIAN provides the MERIDIAN 8-Barrier Drop Deck Trailer that carries everything needed for deployments of up to 8 barriers. The newest upgraded Drop Deck trailer carries all necessary equipment including the Archer Manual Hauler, Field Tow Bar and Arrestor Cables. The Kit includes 8 of the Archer 1200 Barriers, 2 of the Archer Field Tow Bars, 1 of the Archer Manual Haulers, 7 of the 4-foot cables, and 2 of the 10-foot cables.	USA	$83,699.34
1 CHANNEL ADA CABLE PROTECTOR	PRODUCT DESCRIPTION	COO	GSA
 MFR Part Number : ACP001ADA	Channel ADA Cable Protectors is an ADA compliant cable protector that protects cables and hoses up to .75" of their outside diameter. Dog bone connectors can extend to any desired length. It has a reinforced hinged lid for easy cable replacement and is available with ADA compliant ramps. It also has a patented 5 bar tread surface for added traction and a modular interlocking design.	USA	$574.18
WAYFINDING PACKAGE	PRODUCT DESCRIPTION	COO	GSA
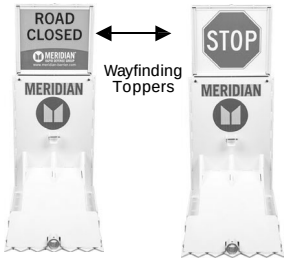 MFR Part Number : AMB1200WSP	MERIDIAN'S Wayfinding Package comes with 8 of our Wayfinding Toppers designed to work exclusively with the Archer 1200 Barriers, as well as 32 interchangeable pre-printed directional inserts.	USA	$6,750.18
GRAPHICS PACKAGE	PRODUCT DESCRIPTION	COO	MSRP
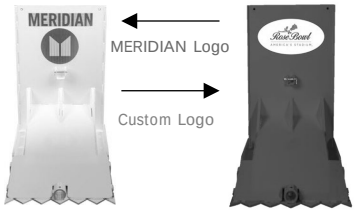 MFR Part Number : AGP001	MERIDIAN'S Graphics Package includes the customer's choice of a customized log. Please note: If Graphics Package is not chosen the Archer 1200 Barrier will come with a reflective MERIDIAN branded logo. All MERIDIAN branded logos are MUTCD compliant. GSA amount is priced for 1 logo only.	USA	$39.00 (ea)
ARCHER TOUCH-UP PAINT	PRODUCT DESCRIPTION	COO	MSRP
 MFR Part Number : ATUPLK001	MERIDIAN'S Archer Touch-Up Paint is matched the paint of the Archer 1200 Barrier ordered, and can be used to make periodic touch-ups when needed. Includes exactly 6 cans of spray paint.	USA	$195.00

CUSTOM PAINT AND RUST PREVENTION	PRODUCT DESCRIPTION	COO	GSA
 MFR Part Number : ACPR001	Meridian offers 8 different colors for our Archer 1200 barriers, but we can do any RAL custom color. With custom color we also include a rust preventative in specific sections of the Archer 1200 Barrier that cannot be powder coated, so they remain bare carbon steel. Carbon steel will naturally rust with just the humidity in the air and even more so when it rains, so we offer a rust preventative coating that will prevent the barriers from rusting for 2000+ hours.	USA	$75.00 (ea)
MANDATORY TRAINING	**PRODUCT DESCRIPTION**	**COO**	**MSRP**
 MFR Part Number : MCTR001	Meridian provides a comprehensive training course directed toward individuals who will be planning and/or executing plans for the deployment of Meridian vehicle mitigation products. Training is essential for understanding the usage of equipment, safety protocols for employees, and best practices in vehicle mitigation. Topics include general safety, standard operating procedures, use case scenarios, and incident reporting. The program content is provided by the Chief Safety Officer, and Meridian retains a record of customer sessions. Additional training is available upon request.	USA	$1,495.00

MERIDIAN RAPID DEFENSE GROUP RENTAL PRICING CATALOG - 2022

ARCHER 1200 BARRIER	PRODUCT DESCRIPTION	GSA	DAILY	WEEKLY	MONTHLY
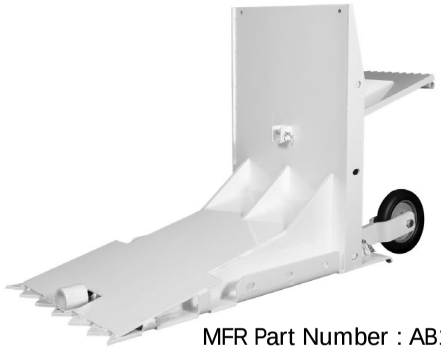 MFR Part Number : AB1200	An unanchored “drop-and-stop” vehicle barrier for rapid deployment on roadways and hard surfaces. MERIDIAN’s ultimate rapidly deployable Archer 1200 Barrier can augment fixed-in-place HVM (Hostile Vehicle Mitigation) barriers or be utilized as a primary security system for entry points, roadways and perimeters. Manufactured of high strength, ballistic rated steel, the Archer 1200 Barrier is easily installed by one person without the need for cranes, heavy equipment, electricity or hydraulics. Simply off-load and place the barriers — no anchors or assembly are required. The Archer 1200 Barrier is an ideal application for: • areas of mass gatherings • campuses • stadiums and sports arenas • police and fire departments • military bases and installations • industrial plants • transportation centers • financial facilities and offices.	$6,513.75	$100.00	$300.00	$900.00

ARCHER MANUAL HAULER 2.0	PRODUCT DESCRIPTION	GSA	DAILY	WEEKLY	MONTHLY
 MFR Part Number : AMHA003-2	The newest and most advanced MERIDIAN Hauler has all the hallmarks of MERIDIAN’s products - maintenance free and one-person ease of use. The Hauler is a rugged barrier dolly that can traverse a variety of surfaces from asphalt to gravel to unimproved dirt roads. The Hauler features a 3,000 lb. rated jack and high strength steel tube construction. The new upgraded leverage action is simple in that it only requires the placement of the extension rod into the barrier receiver and locking the pin in place. Once the leverage Hauler is secured, then a simple swing-action moves the barrier into position. Safety is the key so when lifting the barrier the leverage action is fast up and slow down with the all-purpose brake being deployed.	$1,925.18	$20.00	$100.00	$200.00

MERIDIAN 8-BARRIER DROP DECK TRAILER	PRODUCT DESCRIPTION	GSA	DAILY	WEEKLY	MONTHLY
 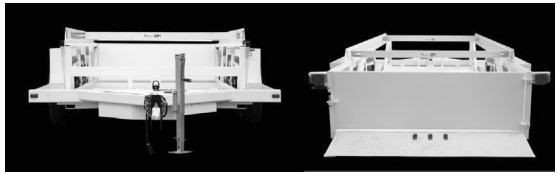 MFR Part Number : ADDT008	The MERIDIAN 8-Barrier Drop Deck Trailer ensures Archer 1200 Mobile Barriers can be deployed in under ten minutes. To transport and deploy the equipment, the MERIDIAN Drop-Deck Trailer lowers to the ground, allowing the Archer 1200 Barriers to roll off at street level and eliminates the need for fork lifts or heavy equipment. Once the trailer is lowered to the ground take the Archer Hauler and off load the barriers one at a time. This trailer allows for single-person deployment. The chassis has no cross members, which allows the loading deck to be lowered completely to the ground. The "A" frame tongue design features a 10" built-in lockable storage compartment on one side and the battery, hydraulic tank/pump and controls on the other side. A 7,000 lb. "quick adjust" jack is mounted on the tongue. The deck is designed so that it can be raised or lowered hydraulically and remains level throughout its travel. Barriers are moved onto the deck at ground level, then raised to full travel position in less than 30 seconds. In the travel position, the deck automatically locks for additional safety while towing. The deck features an extra heavy-duty 3/16" thick diamond steel floor plate with a permanent 18" ramp at the rear and a 24" side-swinging removable tailgate. Attached to the two side rails are E-track rails with three snap-in shoring bars for locking barriers into place. All hydraulic components are located inside the A-frame compartment. The hydraulic motor only runs during the raising of the deck, which is lowered through a gravity return. The hydraulic motor is a DC–12V powered by a 12 volt DC batter mounted inside the compartment.	$23,155.18	$150.00	$350.00	$900.00

ARCHER BEAM GATE 2.0	PRODUCT DESCRIPTION	GSA	DAILY	WEEKLY	MONTHLY
 MFR Part Number : ABG001-2	The Archer Beam Gate is the easiest active protection and check point gate to deliver, set up, and install. Its patented design can be a standalone product or when used with Archer 1200 Barriers can be extended for greater lineage coverage or with expansive configurations. The Archer Beam Gate is ideal for events, check points, construction sites, and command center egresses. The Beam Gate can be expanded from 14 to 20 feet using adjustable netting. The deployment and operation of the Beam Gate requires no electricity or hydraulics, is easily deployable in one hour and is easily transportable to multiple locations. It affords maximum flexibility to meet the unique requirements of the facility and space, and can be maintained easily and inexpensively by one person. Incorporated into the Archer Beam Gate are the technical specifications of: 2 Archer 1200 Barriers, one pivot arm barrier, an Archer Dolly and Counterweights, a Wayfinding Topper, one receiver barrier, two beams and one netting (see additional netting options). For maneuverability of the Archer Beam Gate the purchase of use of the Archer Manual Hauler is strongly recommended.	$48,245.18	$1,495.00	$1,995.00	$2,995.00
ARCHER FIELD TOW BAR	**PRODUCT DESCRIPTION**	**GSA**	**DAILY**	**WEEKLY**	**MONTHLY**
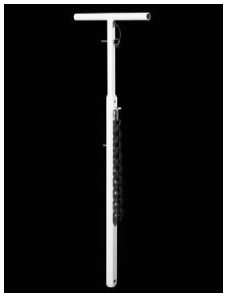 MFR Part Number : AFTB001	A reciprocal handled, levered towing tool with variable height adjustment and two point, rapid connection interface. The tow bar's easy grip handles allows one- or two- person teams to easily position the barriers in place. The portable tow bar separates into two pieces which can be secured for storage on any Archer 1200 Barrier.	$574.18	$15.00	$85.00	$240.00
ARCHER ARRESTOR CABLE – 4 FT.	**PRODUCT DESCRIPTION**	**GSA**	**DAILY**	**WEEKLY**	**MONTHLY**
 MFR Part Number : AAC4F001	MERIDIAN Arrestor Cables use technology from aircraft carriers to absorb the kinetic energy of a moving vehicle and pull the barriers into play for vehicle mitigation without loss of life. They are attached to barriers in 4-foot or 10-foot segments and can be up to 3-ply across a barrier span (3 cables strung between two barriers).	$574.18	$5.00	$30.00	$90.00
ARCHER ARRESTOR CABLE – 10 FT.	**PRODUCT DESCRIPTION**	**GSA**	**DAILY**	**WEEKLY**	**MONTHLY**
 MFR Part Number : AAC10F001	MERIDIAN Arrestor Cables use technology from aircraft carriers to absorb the kinetic energy of a moving vehicle and pull the barriers into play for vehicle mitigation without loss of life. They are attached to barriers in 4-foot or 10-foot segments and can be up to 3-ply across a barrier span (3 cables strung between two barriers). The 10-foot cables are designed to be detached to allow emergency vehicle entry if required.	$670.68	$7.00	$35.00	$120.00

ARCHER 8-BARRIER TRAILER KIT	PRODUCT DESCRIPTION	GSA	DAILY	WEEKLY	MONTHLY
 MFR Part Number : ATRKIT008	MERIDIAN provides the MERIDIAN 8-Barrier Drop Deck Trailer that carries everything needed for deployments of up to 8 barriers. The newest upgraded Drop Deck trailer carries all necessary equipment including the Archer Manual Hauler, Field Tow Bar and Arrestor Cables. The Kit includes 8 of the Archer 1200 Barriers, 2 of the Archer Field Tow Bars, 1 of the Archer Manual Haulers, 7 of the 4-foot cables, and 2 of the 10- foot cables.	$83,699.34	$1,124.00	$3,750.00	$8,995.00
1 CHANNEL ADA CABLE PROTECTOR	PRODUCT DESCRIPTION	GSA	DAILY	WEEKLY	MONTHLY
 MFR Part Number : ACP001ADA	Channel ADA Cable Protectors is an ADA compliant cable protector that protects cables and hoses up to .75" of their outside diameter. Dog bone connectors can extend to any desired length. It has a reinforced hinged lid for easy cable replacement and is available with ADA compliant ramps. It also has a patented 5 bar tread surface for added traction and a modular interlocking design.	$574.18	$10.00	$40.00	$100.00
WAYFINDING PACKAGE	PRODUCT DESCRIPTION	GSA	DAILY	WEEKLY	MONTHLY
 MFR Part Number : AMB1200WSP	MERIDIAN'S Wayfinding Package comes with 8 of our Wayfinding Toppers designed to work exclusively with the Archer 1200 Barriers, as well as 32 interchangeable pre-printed directional inserts.	$6,750.18	$104.00	$320.00	$560.00

PRODUCT DESCRIPTION	DAILY
DELIVERY AND SET UP OF EMERGENCY ORDERS WITHIN 48 HOURS ARCHER 8-BARRIER TRAILER KIT	$1,500.00

PRODUCT DESCRIPTION	DAILY
DELIVERY AND SET UP OF EMERGENCY ORDERS WITHIN 48 HOURS ARCHER 8-BARRIER TRAILER KIT AND ACCESSORIES	$2,000.00