NOTICE TO BIDDERS, SPECIFICATIONS, CONTRACT AND CONTRACT BOND

FOR
HIGHWAY IMPROVEMENT
County of Cook, Illinois

John Yonan, P.E.
Superintendent
Cook County Department of
Transportation and Highways

Toni Preckwinkle
Cook County Board President

Shannon E. Andrews
Chief Procurement Officer

Letting: August 14, 2015

PAVEMENT PRESERVATION AND REHABILITATION PROGRAM 2015 - SOUTH REBID
Section No.: 14-PPRPS-01-PV Route No.: VARIOUS
COOK COUNTY CONTRACT NO.: 1523-14815

107th Street – 88th Avenue to Kean Avenue
103rd Street – 88th Avenue to Kean Avenue
Plainfield Road – Willow Springs Road to East Avenue
Kedzie Avenue – At Governors Highway
Kedzie Avenue – 183rd Street to 175th Street
Sauk Trail – Cicero Avenue to Governors Highway
Wolf Road – At 139th Street

APPROVED BY BOARD OF COOK COUNTY COMMISSIONERS
OCT 28 2015

NOTICE TO PROSPECTIVE BIDDERS

Submit 1 Original and 2 Copies of Proposal

The Specifications can be downloaded at **http://legacy.purchasing/public/index.php** (follow online instructions to register, if you have not already). When the plans are not included in the bid document, you must download the Plans (Drawings) at **ftp://highwayftp.cookcountyil.gov** (user name: **highwaypublic**; password: **ftpt3st!**)

Pre-Bid Meeting: Thursday, July 30, 2015
11 a.m.
Cook County Department of Transportation and Highways
69 W. Washington Street, Suite 2260
Chicago, Illinois 60602

All questions are due on **Monday, August 3, 2015** no later than 3:00pm Chicago time

Send all questions via e-mails to: **edmund.rendon@cookcountyil.gov**

Bid Submitted by:

☐ **Bid Bond** is included ☐ **A Cashier's Check** or a **Certified Check** is Included

Name _____ Phone No. _____
Email Address: _____
Address _____
City _____ State _____ Zip Code _____

Table of Contents

Page No.	Special Provision No.	Description
1	*0 01	Cover Sheet
2		Table of Contents
4	*0 02	Notice Sheet
6		Special Provision Checklist
15	401	IDOT Recurring Special Provision Checklist
16	402	IDOT Local Roads and Streets Recurring Special Provisions Checklist
17	403	IDOT Bureau of Design and Environment Checklist
20	404	IDOT Bureau of Local Roads and Streets District 1 Checklist
27	1a	MBE WBE Definition of Terms, Information for Bidders
31	2	Bidding Requirements and Conditions For Contract Proposals
36	3	Pre-Bid Meeting
37	4	Wages of Employees on Public Works
39	4b	Prevailing Wages for Cook County
46	5	Alternate Proposal/Ordinance
47	6	Responsible Bidder Requirement (Non-Federal Aid)
48	8b	MBE/WBE Business Participation
56	9	Specific Equal Employment Opportunity Responsibilities (Non-Federal Aid)
67	10	Insurance Requirements
72	12a	Indemnification for Cook County
73	13	Joint Venture Forms
79	14	Addendum Receipt
80	16	* Combination Bidding Process
82	17a	Prompt Pay Mechanisms (Non-Federal Aid)
83	23	Contract Claims
84	24	Pre-Construction Conference
85	26	Contract Extra Work
86	27	Construction Air Quality Diesel Vehicle Emissions Control (Green Construction Ordinance)
94	28	Processing of Extra Work Payment Requests
95	31	Engineer's Field Office
99	32	Construction Debris
100	33	*Clean Construction and Demolition Debris
102	50	Dowel Bars
103	53	Diamond Grinding Concrete Pavement
106	55	Crack Routing and Sealing
107	59	Survey Monuments
108	63	Crushed Stone (Temporary Use)
109	69	P.C.C. Surface Finish
110	70	Traffic Barrier Terminal, Type 1, Special
111	72	Cutting Hot-Mix Asphalt Surface
112	73	Hot-Mix Asphalt Driveway Surface Removal
113	74	Temporary Butt Joints
114	77	Treatment of Cracks
115	171	Manholes to be Reconstructed, Special; Catch Basins to be Reconstructed, Special; Valve Vaults to be Reconstructed, Special
116	175	Lids and Frames and Lids
117	176	Frames and Lids to be Adjusted, Special

Table of Contents

Page No.	Special Provision No.	Description
118	178	Flared End Sections to be Removed, Flared End Sections to be Relocated
119	180	Pavement Replacement
121	185	Cooperation With Utilities
123	194	Waterproofing of Existing Sanitary Manholes
124	212	Sodding
125	236	Project Signs Plaque
126	237	Eradication of Existing Pavement Marking
127	238	Raised Reflective Pavement Marker
128	241	Traffic Signal Work General
139	252	Detector Loop
142	256	Coilable Non-Metallic Conduit
144	267	Rebuild Existing Handhole, Rebuild Existing Heavy Duty Handhole, Rebuild Existing Double Handhole
145	272	Maintenance of Existing Traffic Signal Installation
148	405	Temporary Ramps
149	406	Hot Mix Asphalt Density Testing of Longitudinal Joints (BDE)
151	407	Fine Aggregate for Hot-Mix Asphalt (HMA) (D-1)
152	408	Hot Mix Asphalt Mixture IL-4.75 (Dist. 1)
154	409	HMA Moisture Design Requirements (D-1)
168	410	Reclaimed Asphalt Pavement and Reclaimed Asphalt Shingles (D-1)
179	411	Mobilization
180	412	Traffic Protection
185	413	Quality Control of Concrete Mixtures at the Plant
193	414	Quality Control/Quality Assurance of Concrete Mixtures
209	415	Hot Mix Asphalt - Prime Coat (BDE)
214	416	Cleaning Existing Manholes, Catch Basins or Inlets and Cleaning Existing Storm Sewer and Pipe Culverts (Modified)
215		Design Locations and Standards
326	C	Proposal Sheet
328	E(MWBE)	MBE/WBE Economic Disclosure Statement: Identification of Subcontractors, Suppliers and Sub consultants Form; Electronics Payables Program ("E-Payables"); Veteran's Preference for VBE and SDVBE; Affidavit Veteran's Workplace Preference Public Works Contracts; Economic Disclosure Statement and Execution Document Index; Instructions for Completion of Economic Disclosure Statement and Execution Documents; Certifications; Execution Pages; Insert IDOT Certificate of Eligibility; Insert IDOT Affidavit of Availability; Labor Standards & Prevailing Wage Requirements; M/WBE
361	F	Surety's Statement Of Qualification for Bonding
362	G1	Trust Agreement
366	H	Performance and Payment of Bond Form
367	I	Contract
370	400	Contract Exhibit A Scheduling
372	J	Schedule of Prices Sheets
376	K	Proposal Bid Bond
377	L	Bid Deposit Form

COUNTY OF COOK
CHICAGO, ILLINOIS
NOTICE
TO CONTRACTORS FOR A COOK COUNTY DEPARTMENT OF TRANSPORTATION AND HIGHWAYS IMPROVEMENT

Notice is hereby given that sealed bids for a Department of Transportation and Highways Improvement in the County of Cook, Illinois, as described below, will be received at Room 1018, County Building, and 118 North Clark Street, Chicago, Illinois until **10:00 a.m. Friday, August 14, 2015** and then publicly opened and read aloud.

Improvement: **PAVEMENT PRESERVATION AND REHABILITATION PROGRAM 2015 - SOUTH REBID**

Section: **14-PPRPS-01-PV**; Route: **VARIOUS**; Township: **VARIOUS**; Contract No.: **1523-14815**

The proposed improvements are part of the public highway system in the County of Cook, State of Illinois, located described below and indicated on the map showing the County Highway System on file in the office of the County Clerk and also in the office of the Illinois Department of Transportation, Division of Highways, Springfield, Illinois.

107th Street - 88th Avenue to Kean Avenue: This section begins on the east edge of pavement of Kean Avenue and continues to the end of the taper approximately 273 feet of the west edge of pavement of 88th Avenue.

103rd Street - 88th Avenue to Kean Avenue: This section begins on the east edge of pavement of Kean Avenue and continues to the west edge of pavement of 88th Avenue.

Plainfield Road - Willow Springs Rd to East Avenue: This section begins on the east edge of pavement of Willow Springs Road and continues to the west edge of pavement of East Avenue.

Kedzie Avenue - At Governors Highway: This section begins approximately 450 feet south of the centerline of Governors Highway and continues approximately 1000 feet north.

Kedzie Avenue - 183rd Street to 175th Street: This section begins on the south edge of pavement of 183rd Street and continues to the south edge of pavement of 175th Street.

Sauk Trail - Cicero Avenue to Governors Highway: This section begins approximately 42 feet east of the east edge of pavement of Cicero Avenue and continues to the west edge of pavement of Governors Highway.

Wolf Road - at 139th Street: This section consists of replacing a culvert approximately 20 feet east of the east edge of pavement of 139th Street.

DESCRIPTION OF IMPROVEMENT

107th Street - 88th Avenue to Kean Avenue
This includes grinding and overlaying of the existing hot-mix asphalt pavements, patching, shoulder repair, drainage repairs, improvements and adjustments, sidewalk removal and ADA compliant ramp construction, traffic control and protection, striping, restoration and other appurtenant work as required.

103rd Street - 88th Avenue to Kean Avenue
This includes grinding and overlaying of the existing hot-mix asphalt pavements, patching, shoulder repair, drainage repairs, improvements and adjustments, sidewalk removal and ADA compliant ramp construction, traffic control and protection, striping, restoration and other appurtenant work as required.

Plainfield Road - Willow Springs Rd to East Avenue
This includes grinding and overlaying of the existing hot-mix asphalt pavements, patching, shoulder repair, drainage repairs, improvements and adjustments, sidewalk removal and ADA compliant ramp construction, traffic control and protection, striping, restoration and other appurtenant work as required.

Kedzie Avenue - At Governors Highway
This project consists of Class B Patching and Diamond Grinding the existing Portland cement concrete pavement. Also included in this project is replacement of the pavement markings, curb and gutter repair, where directed by the Engineer, ditch regrading, drainage additions and adjustments, traffic signal improvements and other related road work as required.

Kedzie Avenue - 183rd Street to 175th Street
This project consists of Class B Patching and Diamond Grinding the existing Portland cement concrete pavement. Also included in this project is replacement of the pavement markings, curb and gutter repair, where directed by the Engineer, ditch regrading, drainage additions and adjustments, traffic signal improvements and other related road work as required.

Sauk Trail - Cicero Avenue to Governors Highway
This project consists of Class B Patching and Diamond Grinding the existing Portland cement concrete pavement. Also included in this project is replacement of the pavement markings, curb and gutter repair, where directed by the Engineer, ditch regrading, drainage additions and adjustments, traffic signal improvements and other related road work as required.

Wolf Road - at 139th Street
This project consists of replacing the existing storm sewer and the adjacent pavement replacement, ditch regrading and landscaping.

COOK COUNTY DEPARTMENT OF TRANSPORTATION AND HIGHWAYS
SPECIAL PROVISION CHECKLIST

EFFECTIVE May 26, 2015 v.2015.6

Project: Pavement Preservation and Rehabilitation Program 2015- SOUTH REBID

Limits: Various Locations

Section: 14-PPRPS-01-PV

	No.	Description	Origin and Date Last Revised
	1	Definition of Terms, Information for Bidders	(CC) February 27, 2015
X	1a	MBE WBE Definition of Terms, Information for Bidders	(CC) July 15, 2014
X	2	Bidding Requirements and Conditions For Contract Proposals	(IL-CC) Jan. 15, 2013
X	3	* Pre-Bid Meeting	(CC) Jan. 15, 2013
X	4	* Wages of Employees on Public Works	(IL-CC) Dec. 26, 2013
	4a	Davis Bacon Act (Federal Aid)	(FHWA) Apr. 2009
X	4b	Prevailing Wages for Cook County	Current Month
X	5	Alternate Proposal/Ordinance	(CC) Dec. 28, 2011
X	6	Responsible Bidder Requirement (Non-Federal Aid)	(IL-CC) Dec. 28, 2011
	7	FHWA 1273 Required Contract Provisions Federal-Aid Construction Contracts	(FHWA) May 1, 2012
	7a	Additional State Requirements for Federal-Aid Construction Contracts	(IL Recurring) Jan. 1, 2015
	7b	Subletting of Contracts (Federal-Aid Contracts)	(IL Recurring) Jan. 1, 2014
	7c	EEO	(IL Recurring) Nov. 18, 1980
	7d	Substance Abuse Prevention Program	(IL LRS Recurring) Jan. 1, 2014
	8a	* Required Disadvantaged Business Participation (DBE)	(IL-CC) July 15, 2013
X	8b	* MBE/WBE Business Participation	(CC) May 5, 2014
	8c	Weekly DBE Trucking Reports (FA locally let projects)	(IL BDE) June 2, 2012
X	9	Specific Equal Employment Opportunity Responsibilities (Non-Federal Aid)	(IL-CC) Jan. 15, 2013
X	10	Insurance Requirements	(CC) Nov. 13, 2014
	10a	Township Insurance Requirements	(CC) Nov. 13, 2014
	11	* Railroad Protective Liability Insurance	(IL-CC) Dec. 26, 2013
X	12a	Indemnification for Cook County	(CC) Dec. 28, 2011
	12b	Indemnification (Locals)	(CC) Jan. 23, 2012
X	13	Joint Venture Forms	(CC) Jan. 15, 2013
X	14	Addendum Receipt	(CC) Dec. 28, 2009
	15	Not Used	
X	16	* Combination Bidding Process	(IL-CC) Jan. 15, 2013
X	17a	Prompt Pay Mechanisms (Non-Federal Aid)	(CC) Jan. 15, 2013
	17b	Prompt Pay Mechanisms (Federal Aid)	(FHWA) Current
	18-22	Not Used	
X	23	Contract Claims	(IL-CC) Jan. 15, 2013
X	24	Pre-Construction Conference	(CC) Mar. 18, 1980

	No.	Description	Origin and Date Last Revised
	25	Mobilization	(CC) Oct. 20, 2009
X	26	Contract Extra Work	(CC) Dec. 24, 2012
X	27	Construction Air Quality Diesel Vehicle Emissions Control (Green Construction Ordinance)	(CC) Jan. 15, 2013
X	28	Processing of Extra Work Payment Requests	(CC) Dec. 24, 2012
	29	Construction Layout Stakes and Survey Control Points	(CC) Jan. 15, 2013
	30	* Municipal Coordination/Transfer of Jurisdiction and/or Maintenance	(CC) Jan. 15, 2013
X	31	Engineer's Field Office	(CC) Jan. 15, 2013
X	32	Construction Debris	(CC) July 1, 2006
X	33	* Clean Construction and Demolition Debris	(CC) Jan. 15, 2013
	34-44	Not Used	
	45	Portland Cement Concrete Pavement	(CC) July 1, 2012
	46	Managing Concrete Waste	(CC) Jan. 1, 2009
	47	Class B Patches, Special	(CC) Jan. 1, 2008
	48	Class C Patches, Special	(CC) Jan. 1, 2008
	49	Pavement Removal and Replacement (10Inch)	(CC) Jan. 1, 2008
X	50	Dowel Bars	(CC) Jan. 1, 2008
	51	Structural Fiber Reinforced P.C. Concrete Bus Pad (4 Inch)	(CC) Jan. 1, 2008
	52	P.C.C. Bonded Overlay (4 Inch)	(CC) Jan. 1, 2007
X	53	Diamond Grinding Concrete Pavement	(CC) Jan. 15, 2013
	54	Saw Cutting Concrete Overlay	(CC) Jan. 1, 2007
X	55	Crack Routing and Sealing	(IL-CC) Jan. 1, 2008
	56	Hot-Mix Asphalt Surface Course, Rubber Modified	(CC) Jan. 1, 2008
	57	Rubberized Asphalt Material	(CC) Jan. 1, 2008
	58	Pavement Thickness Deficiency	(CC) Mar. 1, 2008
X	59	Survey Monuments	(CC) Jan. 15, 2013
	60	Soils Information	(CC) Jan. 15, 2013
	61	Stockpiled Embankment	(CC) July 1, 2012
	62	Borrow Excavation	(CC) July 1, 2000
X	63	Crushed Stone (Temporary Use)	(CC) Jan. 1, 2008
	64	Aggregate Subgrade, (12 INCH)	(IL) Current
	65	Expanded Polystyrene Fill	(CC) Jan. 15, 2013
	66	Cellular Concrete Fill	(CC) July 1, 2006
	67	GEO-GRID Subgrade Reinforcing Mat	(CC) May 1, 2003
	68	Earth Excavation (Special)	(CC) Jan. 15, 2013
X	69	P.C.C. Surface Finish	(CC) April 7, 2010
X	70	Traffic Barrier Terminal, Type 1, Special	(IL-CC) Jan. 1, 2008
	71	Not Used	
X	72	Cutting Hot-Mix Asphalt Surface	(CC) Jan. 1, 2008

	No.	Description	Origin and Date Last Revised
X	73	Hot-Mix Asphalt Driveway Surface Removal	(CC) July 1, 2012
X	74	Temporary Butt Joints	(CC) Jan. 1, 2008
	75	Hot-Mix Asphalt Stabilized Sub base	(CC) Jan. 1, 2008
	76	Hot-In-Place Asphalt Recycling by the Heater Scarifying Overlay Method	(CC) July 1, 2011
X	77	Treatment of Cracks	(CC) Jan. 1, 2008
	78	Strip Reflective Crack Control Treatment, Special	(CC) May 1, 2003
	79	Cold Recycled In-Place Bituminous Base Course	(CC) Oct. 1, 2009
	80	Temporary By-Pass Pavement (Non-Federal Aid)	(CC) Jan. 1, 2008
	81	Temporary By-Pass Pavement (Federal Aid)	(CC) July 1, 2011
	82	Reflective Crack Control Treatment	(CC) Jan. 1, 2012
	83-116	Not Used	
	117	Approach Slab Repair	(IL-CC) Sep. 25, 2009
	118	Asbestos Waterproofing Membrane & Asbestos Hot-Mix-Asphalt Surface Removal (BDE)	(IL) Current
	119	Not Used	
	120	Segmental Concrete Block Walls	(IL) Current
	121	Temporary Soil Retention System	(IL) Current
	122	Steel Structures	(CC) Nov. 21, 2007
	123	Not Used	
	124	Cleaning and Painting Existing Steel Structures	(IL) Current
	125	Containment and Disposal of Lead Paint Cleaning Residues	(IL) Current
	126	Fine or Coarse Aggregate Embankment	(CC) Jan. 12, 2003
	127	Strip Seal Joint Assembly with Elastomeric Concrete Headers	(CC) Oct. 3, 2011
	128	Drainage System	(IL) Current
	129	Grating	(CC) Jan. 15, 2013
	130	Silicone Bridge Joint Sealer	(IL) Current
	131	Not Used	
	132	Deck Slab Repair	(IL) Current
	133	Bridge Deck Latex Concrete Overlay	(IL) Current
	134	Surface Finish	(IL-CC) Jan. 1, 2007
	135-136	Not Used	
	137	Welded Wire Fabric, Epoxy Coated	(CC) Nov. 21, 2007
	138	Permanent Steel Sheet Piling	(IL) Current
	139	Temporary Sheet Piling	(IL) Current
	140	Precast Concrete Junction Chambers	(CC) Nov. 1, 2007
	141	Jack and Remove Existing Bearings	(IL) Current
	142	Jacking Existing Superstructure	(IL) Current
	143	Junction Chamber	(CC) Jan. 1, 2007

	No.	Description	Origin and Date Last Revised
	144	Neoprene Expansion Joint Removal	(CC) Oct. 10, 1995
	145	Structural Repair of Concrete	(IL) Current
	146	Polymer Modified Portland Cement Mortar	(IL) Current
	147	Concrete Wearing Surface for Use With Deck Beams	(IL) Current
	148	Sheet Waterproofing Membrane System	(CC) Nov. 19, 1999
	149	Chain Link Fence (Modified)	(CC) Jan. 1, 2004
	150-155	Not Used	
	156	Storm Sewer, (Ductile Iron Pipe) and Storm Sewers, (Extra Strength Vitrified Clay Pipe) in the City of Chicago	(CC) Oct. 20, 2009
	157	Water Main for Installation in the City of Chicago	(CC) Dec. 21, 2009
	158	Frames, City Electric in the City of Chicago	(CC) July 1, 2012
	159	Lids, City Electric in the City of Chicago	(CC) April 14, 2009
	160	Lids and Lids, ADA Compliant in the City of Chicago	(CC) April 14, 2009
	161	Various City Drainage and Utility Structure Adjustments in the City of Chicago	(CC) Dec. 21, 2009
	162	Storm Sewer Installation in the City of Chicago	(CC) Dec. 1, 2009
	163	Boring and Jacking Storm Sewers, Sanitary Sewers or Water Mains	(CC) Dec. 1, 2007
	164	Storm Sewers Jacked in Place (Over 36 In. Dia.)	(CC) Dec. 21, 2009
	165	Storm Sewer Drilled and Pushed (36 In. Dia. Max.)	(CC) Dec. 1, 2007
	166	Storm Sewers, Abandon and Fill	(CC) Jan. 15, 2013
	167	Storm Sewer to be Televised	(CC) July 1, 2012
	168	Connecting Existing Field Drain Tile	(CC) July 1, 2012
	169	Plugging Existing Drains and Sewers	(CC) Dec. 1, 2007
	170	Blocking Existing Drains and Sewers	(CC) Dec. 21, 2009
X	171	Manholes to be Reconstructed, Special; Catch Basins to be Reconstructed, Special; Valve Vaults to be Reconstructed, Special	(CC) Dec. 1, 2007
	172	Not Used	
	173	Manholes, Type A, with Restrictor Plate, Frames and Lids	(CC) July 1, 2012
	174	Not Used	
X	175	Lids and Frames and Lids	(CC) Jan. 15, 2013
X	176	Frames and Lids to be Adjusted, Special	(CC) Dec. 21, 2009
	177	Headwall Inlet and Grate	(CC) July 1, 2012
X	178	Flared End Sections to be Removed, Flared End Sections to be Relocated	(CC) Dec. 30, 2008
	179	Bracing and Sheeting	(CC) Dec. 1, 2007
X	180	Pavement Replacement	(CC) July 1, 2011
	181	Duck Bill Elastomeric Check Valve	(CC) July 1, 2012
	182	Catch Basin Oil and Debris Hoods	(CC) Jan. 15, 2013
	183	Frames and Lids to be Adjusted, Special (Pavement Recycling)	(CC) Jan. 1, 2013
	184	Not Used	

	No.	Description	Origin and Date Last Revised
X	185	* Cooperation With Utilities	(CC) Feb. 10, 2012
	186	Water Valve Boxes to be Adjusted and Domestic Meter Vaults to be Adjusted	(CC) Dec. 21, 2009
	187	Domestic Water Service Boxes to be Adjusted	(CC) Dec. 21, 2009
	188	Filling Existing Valve Vaults	(CC) Dec. 21, 2009
	189	Valve Vaults to be Removed	(CC) Dec. 21, 2009
	190	Water Main Installation	(CC) Dec. 1, 2009
	191	Fire Hydrants Vertical Adjustment	(CC) Dec. 21, 2009
	192	Sanitary Sewer Installation	(CC) July 1, 2012
	193	Sanitary Manholes	(CC) Dec. 21, 2009
X	194	Waterproofing of Existing Sanitary Manholes	(CC) July 1, 2012
	195-199	Not Used	
	200	Cleaning Existing Manholes, Catch Basins or Inlets and Cleaning Existing Storm Sewer and Pipe Culverts	(CC) Dec. 1, 2008
	201	Not Used	
	202	* National Pollutant Discharge Elimination System	(CC) January 1, 2013
	203	Not Used	
	204	Maintaining Drainage and Stream Protection	(CC) Dec. 1, 2007
	205	Storm Water Pollution Separation System	(CC) July 1, 2012
	206	Storm Water Pollution Separation System (SPECIAL)	(CC) Dec. 1, 2007
	207	Storm Water Pollution Separation System (In-Line)	(CC) July 1, 2012
	208-210	Not Used	
	211	Seeding	(CC) Sept. 1, 2002
X	212	Sodding	(CC) Jan. 15, 2013
	213	Trees To Be Planted	(CC) Jan. 1, 2013
	214	Salvaging and Transplanting Trees; Salvaging and Transplanting Shrubs	(CC) Sept. 1, 2002
	215	Planting Woody Plants	(CC) Jan. 1, 1997
	216	Seeding, Fine Fescue Blend	(CC) Jan. 1, 2007
	217	Seeding, Class 4B Modified	(CC) Jan. 1, 2007
	218-226	Not Used	
	227	Work Zone Traffic Control Surveillance	(IL) Current
	228	Traffic Control Devices – Detour Routing	(CC) July 1, 2012
	229	Not Used	
	230	Sign Identification Decal	(CC) Jan. 15, 2013
	231	Traffic Protection	(CC) July 1, 2012
	232-235	Not Used	
X	236	Project Signs Plaque	(CC) Jan. 15, 2013
X	237	Eradication of Existing Pavement Marking	(CC) Dec. 1, 2009
X	238	Raised Reflective Pavement Marker	(IL-CC) July 1, 2012

	No.	Description	Origin and Date Last Revised
	239-240	Not Used	
X	241	Traffic Signal Work General	(ILD1CC) Jan. 15, 2013
	242	Construction at Railroad Crossing	(CC) June 1, 2012
	243	Signal Head, Optically Programmed Signal Head and Pedestrian Signal Head	(CC) June 1, 2012
	244	Light Emitting Diode (LED) Traffic Signal	(ILD1CC) June 1, 2012
	245	Light Emitting Diode (LED) Pedestrian Countdown Signal Head	(ILD1CC) June 1, 2012
	246	Traffic Signal Backplate	(ILD1CC) June 1, 2012
	247	Illuminated Sign, Light Emitting Diode	(ILD1CC) June 1, 2012
	248	Traffic Signal Post, Pedestrian Pushbutton Post	(ILD1CC) June 1, 2012
	249	Steel Mast Arm Assembly and Pole and/or Steel Combination Mast Arm Assembly and Pole	(ILD1CC) June 1, 2012
	250	Traffic Actuated Controller, Traffic Actuated Controller with Cabinet, Inductive Loop Detector	(ILD1CC) Jan. 15, 2013
	251	Master Controller	(ILD1CC) Jan. 15, 2013
X	252	Detector Loop	(ILD1CC) Jan. 15, 2013
	253	Video Detection System For Temporary Traffic Signal Installation	(CC) June 1, 2012
	254	Pedestrian Pushbutton	(ILD1CC) June 1, 2012
	255	Conduit	(IL-CC) June 1, 2012
X	256	Coilable Non-Metallic Conduit	(ILD1CC) June 1, 2012
	257	Not used	
	258	Electric Cable	(ILD1CC) June 1, 2012
	259	Railroad Interconnect Cable	(ILD1CC) June 1, 2012
	260	Fiber Optic Cable	(ILD1CC) June 1, 2012
	261	System Ground and Grounding Cable	(ILD1CC) June 1, 2012
	262	Grounding Existing Handhole Frame and Cover	(ILD1) Current
	263	Service Installation, Pole Mounted	(ILD1CC) June 1, 2012
	264	Service Installation, Ground Mounted	(ILD1CC) June 1, 2012
	265	* Electric Service	(CC) Jan. 15, 2013
	266	Handhole	(ILD1CC) June 1, 2012
X	267	Rebuild Existing Handhole, Rebuild Existing Heavy Duty Handhole, Rebuild Existing Double Handhole	(CC) June 1, 2012
	268	Concrete Foundation	(ILD1CC) June 1, 2012
	269	Modify Existing Type "D" Foundation	(CC) June 1, 2012
	270	Remove Existing Traffic Signal Equipment	(ILD1CC) June 1, 2012
	271	Temporary Traffic Signal Installation	(ILD1CC) Jan. 15, 2013
X	272	Maintenance of Existing Traffic Signal Installation	(ILD1CC) June 1, 2012
	273	Emergency Vehicle Priority System	(ILD1CC) June 1, 2012
	274	Relocate Existing Emergency Vehicle Priority System, Detector Unit	(CC) June 1, 2012
	275	Relocate Existing Emergency Vehicle Priority System, Phasing Unit	(CC) June 1, 2012
	276	Confirmation Beacon System	(CC) June 1, 2012

No.	Description	Origin and Date Last Revised
277	Re-Optimize Traffic Signal System	(ILD1CC) Jan. 15, 2013
278	Optimize Traffic Signal System	(ILD1CC) Jan. 15, 2013
279	Median Removal and Replacement	(CC) June 1, 2012
280	Sidewalk Removal and Replacement	(CC) June 1, 2012
281	Relocate Existing Light Standard and Luminaire Complete in Place	(CC) Jan. 15, 2013
282	Maintenance Of Lighting System	(ILD1CC) June 1, 2012
283	City Electric Manholes to be Adjusted	(CC) June 1, 2012
284	Uninterruptible Power Supply (UPS)	(ILD1CC) June 1, 2012
285	Traffic Signal Cabinet Load Switch	(CC) June 1, 2012
286	Temporary Traffic Signal Timings	(ILD1CC) June 1, 2012
287	Combination Lighting and Traffic Signal Service Installation, Pole Mounted	(CC) June 1, 2012
288	Illuminated Street Name Sign	(ILD1CC) June 1, 2012
289	Relocate Existing Illuminated Street Name Sign	(CC) June 1, 2012
290	Video Detection System, Single Camera Processor Video Detection	(CC) June 1, 2012
291	Video Detection System, Complete Intersection	(CC) June 1, 2012
292	Not Used	
293	Uninterruptible Power Supply Without Cabinet	(CC) June 1, 2012
294	Modifying Existing Controller Cabinet	(ILD1CC) June 1, 2012
295-300	Not Used	

Additional Inserted Special Provisions (As Required)

Additional Document Inclusions (Required)

X	*0 01	Cover Sheet	(CC) April 30, 2015
X	*0 02	Notice Sheet	(CC) Jan. 15, 2013
X	*C	Proposal Sheet	(CC) Jan. 1, 2008
	*E(DBE)	DBE Economic Disclosure Statement Identification of Subcontractors, Suppliers and Sub consultants Form; Electronics Payables Program ("E-Payables"); Veteran's Preference for VBE and SDVBE; Affidavit Veteran's Workplace Preference Public Works Contracts; Economic Disclosure Statement and Execution Document Index; Instructions for Completion of Economic Disclosure Statement and Execution Documents; Certifications; Execution Pages; Insert IDOT Certificate of Eligibility; Insert IDOT Affidavit of Availability; Labor Standards & Prevailing Wage Requirements; DBE Forms	(CC) April 7, 2015
X	*E(MWBE)	MBE/WBE Economic Disclosure Statement: Identification of Subcontractors, Suppliers and Sub consultants Form; Electronics Payables Program ("E-Payables"); Veteran's Preference for VBE and SDVBE; Affidavit Veteran's Workplace Preference Public Works Contracts; Economic Disclosure Statement and Execution Document Index; Instructions for Completion of Economic Disclosure Statement and Execution Documents; Certifications; Execution Pages; Insert IDOT Certificate of Eligibility; Insert IDOT Affidavit of Availability; Labor Standards & Prevailing Wage Requirements; M/WBE Forms	(CC) April 7, 2015
X	F	Surety's Statement Of Qualification for Bonding	(CC) June 2, 2011
X	*G1	Trust Agreement	(CC) May 20, 2015
X	*H	Performance and Payment of Bond Form	(CC) June 9, 2011
X	*I	Contract	(CC) Jan. 15, 2013
X	*J	Schedule of Prices Sheets	(CC) Dec. 28, 2011
X	*K	Proposal Bid Bond	(CC) Jan. 15, 2013
X	*L	Bid Deposit Form	(CC) Jan. 15, 2013

* Special Provisions marked with an asterisk (*) have information that must be filled in prior to inclusion in the Contract Documents.

Origin of Special Provisions

(CC)	Initiated by Cook County Department of Transportation and Highways
(IL) Current	Initiated by Illinois Department of Transportation
(ILD1) Current	Initiated by Illinois Department of Transportation District 1
(IL-CC)	Initiated by the Illinois Department of Transportation and amended by Cook County Department of Transportation and Highways
(ILD1-CC)	Initiated by Illinois Department of Transportation District 1 and amended by Cook County Department of Transportation and Highways
(IL Recurring)	Initiated by Illinois Department of Transportation Recurring Special Provisions
(IL LR Recurring)	Initiated by Illinois Department of Transportation Local Roads Recurring Special Provisions
(IL BDE)	Initiated by Illinois Department of Transportation Bureau of Design and Environment
(IL LR)	Initiated by Illinois Department of Transportation Bureau of Local Roads and Streets
(IL D-1)	Initiated by Illinois Department of Transportation District 1

Initiating Bureau/Division	Cook County Department of Transportation and Highways Special Provision Catalog Number
Contract Documents Office	1-20
Construction Bureau	21-40
Pavement Geometrics Division	41-114
Structural Division	115-155
Drainage Division	156-210
Landscaping Division	211-225
Transportation and Planning Bureau	226-240

CHECK SHEET
FOR
RECURRING SPECIAL PROVISIONS

Adopted January 1, 2015

The following RECURRING SPECIAL PROVISIONS indicated by an "X" are applicable to this contract and are included by reference:

RECURRING SPECIAL PROVISIONS

CHECK SHEET #			PAGE NO.
1	☐	Additional State Requirements for Federal-Aid Construction Contracts	163
2	☐	Subletting of Contracts (Federal-Aid Contracts)	166
3	☐	EEO	167
4	☐	Specific EEO Responsibilities Non Federal-Aid Contracts	177
5	☐	Required Provisions - State Contracts	182
6	☐	Asbestos Bearing Pad Removal	188
7	☐	Asbestos Waterproofing Membrane and Asbestos Hot-Mix Asphalt Surface Removal	189
8	☐	Temporary Stream Crossings and In-Stream Work Pads	190
9	☐	Construction Layout Stakes Except for Bridges	191
10	☐	Construction Layout Stakes	194
11	☐	Use of Geotextile Fabric for Railroad Crossing	197
12	☐	Subsealing of Concrete Pavements	199
13	☐	Hot-Mix Asphalt Surface Correction	203
14	☐	Pavement and Shoulder Resurfacing	205
15		Reserved	206
16	☐	Patching with Hot-Mix Asphalt Overlay Removal	207
17	☐	Polymer Concrete	208
18	☐	PVC Pipeliner	210
19	☐	Pipe Underdrains	211
20	☐	Guardrail and Barrier Wall Delineation	212
21	☐	Bicycle Racks	216
22		Reserved	218
23	☐	Temporary Portable Bridge Traffic Signals	219
24	☐	Work Zone Public Information Signs	221
25	☐	Nighttime Inspection of Roadway Lighting	222
26	☐	English Substitution of Metric Bolts	223
27	☐	English Substitution of Metric Reinforcement Bars	224
28	☐	Calcium Chloride Accelerator for Portland Cement Concrete	225
29		Reserved	226
30	☒	Quality Control of Concrete Mixtures at the Plant	227
31	☒	Quality Control/Quality Assurance of Concrete Mixtures	235
32	☐	Digital Terrain Modeling for Earthwork Calculations	251
33	☐	Pavement Marking Removal	253
34	☐	Preventive Maintenance – Bituminous Surface Treatment	254
35	☐	Preventive Maintenance – Cape Seal	260
36	☐	Preventive Maintenance – Micro-Surfacing	275
37	☐	Preventive Maintenance – Slurry Seal	286
38	☐	Temporary Raised Pavement Markers	296
39	☐	Restoring Bridge Approach Pavements Using High-Density Foam	297

CHECK SHEET
FOR
LOCAL ROADS AND STREETS RECURRING SPECIAL PROVISIONS

Adopted January 1, 2015

The following LOCAL ROADS AND STREETS RECURRING SPECIAL PROVISIONS indicated by an "X" are applicable to this contract and are included by reference:

LOCAL ROADS AND STREETS RECURRING SPECIAL PROVISIONS

CHECK SHEET #			PAGE NO.
LRS 1		**Reserved**	301
LRS 2	☐	Furnished Excavation	302
LRS 3	☐	Work Zone Traffic Control Surveillance	303
LRS 4	☐	Flaggers in Work Zones	304
LRS 5	☐	Contract Claims	305
LRS 6	■	Bidding Requirements and Conditions for Contract Proposals	306
LRS 7	☐	Bidding Requirements and Conditions for Material Proposals	312
LRS 8		**Reserved**	318
LRS 9	☐	Bituminous Surface Treatments	319
LRS 10		**Reserved**	320
LRS 11	☐	Employment Practices	321
LRS 12	■	Wages of Employees on Public Works	323
LRS 13	☐	Selection of Labor	325
LRS 14	☐	Paving Brick and Concrete Paver Pavements and Sidewalks	326
LRS 15	☐	Partial Payments	329
LRS 16	☐	Protests on Local Lettings	330
LRS 17	☐	Substance Abuse Prevention Program	331
LRS 18	☐	Multigrade Cold Mix Asphalt	332

BDE SPECIAL PROVISIONS
For the January 16 and March 6, 2015 Lettings

The following special provisions indicated by an "x" are applicable to this contract and will be included by the Project Development and Implementation Section of the BD&E. An * indicates a new or revised special provision for the letting.

File Name	#		Special Provision Title	Effective	Revised
80240	1		Above Grade Inlet Protection	July 1, 2009	Jan. 1, 2012
80099	2		Accessible Pedestrian Signals (APS)	April 1, 2003	Jan. 1, 2014
80274	3		Aggregate Subgrade Improvement	April 1, 2012	Jan. 1, 2013
80192	4		Automated Flagger Assistance Device	Jan. 1, 2008	
80173	5		Bituminous Materials Cost Adjustments	Nov. 2, 2006	Aug. 1, 2013
80241	6		Bridge Demolition Debris	July 1, 2009	
5026I	7		Building Removal-Case I (Non-Friable and Friable Asbestos)	Sept. 1, 1990	April 1, 2010
5048I	8		Building Removal-Case II (Non-Friable Asbestos)	Sept. 1, 1990	April 1, 2010
5049I	9		Building Removal-Case III (Friable Asbestos)	Sept. 1, 1990	April 1, 2010
5053I	10		Building Removal-Case IV (No Asbestos)	Sept. 1, 1990	April 1, 2010
* 80310	11		Coated Galvanized Steel Conduit	Jan. 1, 2015	Jan. 1, 2016
* 80341	12		Collable Nonmetallic Conduit	Aug. 1, 2014	Jan. 1, 2015
80198	13		Completion Date (via calendar days)	April 1, 2008	
80199	14		Completion Date (via calendar days) Plus Working Days	April 1, 2008	
80293	15		Concrete Box Culverts with Skews > 30 Degrees and Design Fills ≤ 5 Feet	April 1, 2012	April 1, 2014
80294	16		Concrete Box Culverts with Skews ≤ 30 Degrees Regardless of Design Fill and Skews > 30 Degrees with Design Fills > 5 Feet	April 1, 2012	April 1, 2014
80311	17		Concrete End Sections for Pipe Culverts	Jan. 1, 2013	
80334	18		Concrete Gutter, Curb, Median, and Paved Ditch	April 1, 2014	Aug. 1, 2014
80277	19		Concrete Mix Design – Department Provided	Jan. 1, 2012	Jan. 1, 2014
80261	20		Construction Air Quality – Diesel Retrofit	June 1, 2010	Nov. 1, 2014
80335	21		Contract Claims	April 1, 2014	
80029	22		Disadvantaged Business Enterprise Participation	Sept. 1, 2000	Aug. 2, 2011
80265	23		Friction Aggregate	Jan. 1, 2011	Nov. 1, 2014
80229	24		Fuel Cost Adjustment	April 1, 2009	July 1, 2009
80329	25		Glare Screen	Jan. 1, 2014	
80304	26		Grooving for Recessed Pavement Markings	Nov. 1, 2012	Aug. 1, 2014
80246	27	x	Hot-Mix Asphalt – Density Testing of Longitudinal Joints	Jan. 1, 2010	April 1, 2012
80322	28		Hot-Mix Asphalt – Mixture Design Composition and Volumetric Requirements	Nov. 1, 2013	Nov. 1, 2014
80323	29		Hot-Mix Asphalt – Mixture Design Verification and Production	Nov. 1, 2013	Nov. 1, 2014
80347	30		Hot-Mix Asphalt – Pay for Performance Using Percent Within Limits – Jobsite Sampling	Nov. 1, 2014	
80348	31	x	Hot-Mix Asphalt – Prime Coat	Nov. 1, 2014	
80315	32		Insertion Lining of Culverts	Jan. 1, 2013	Nov. 1, 2013
* 80351	33		Light Tower	Jan. 1, 2015	
80336	34		Longitudinal Joint and Crack Patching	April 1, 2014	
80324	35		LRFD Pipe Culvert Burial Tables	Nov. 1, 2013	Nov. 1, 2014
80325	36		LRFD Storm Sewer Burial Tables	Nov. 1, 2013	Nov. 1, 2014
80045	37		Material Transfer Device	June 15, 1999	Aug. 1, 2014
* 80342	38		Mechanical Side Tie Bar Inserter	Aug. 1, 2014	Jan. 1, 2016
80165	39		Moisture Cured Urethane Paint System	Nov. 1, 2006	Jan. 1, 2010
80337	40		Paved Shoulder Removal	April 1, 2014	
80349	41		Pavement Marking Blackout Tape	Nov. 1, 2014	
80298	42		Pavement Marking Tape Type IV	April 1, 2012	
80254	43		Pavement Patching	Jan. 1, 2010	

File Name	#		Special Provision Title	Effective	Revised
* 80352	44		Pavement Striping - Symbols	Jan. 1, 2015	
* 80353	45		Portland Cement Concrete Inlay or Overlay	Jan. 1, 2015	
80338	46		Portland Cement Concrete Partial Depth Hot-Mix Asphalt Patching	April 1, 2014	
80343	47		Precast Concrete Handhole	Aug. 1, 2014	
80300	48		Preformed Plastic Pavement Marking Type D - Inlaid	April 1, 2012	
80328	49		Progress Payments	Nov. 2, 2013	
3426I	50		Railroad Protective Liability Insurance	Dec. 1, 1986	Jan. 1, 2006
80157	51		Railroad Protective Liability Insurance (5 and 10)	Jan. 1, 2006	
80306	52		Reclaimed Asphalt Pavement (RAP) and Reclaimed Asphalt Shingles (RAS)	Nov. 1, 2012	April 1, 2014
80350	53		Retroreflective Sheeting for Highway Signs	Nov. 1, 2014	
80327	54		Reinforcement Bars	Nov. 1, 2013	
80344	55		Rigid Metal Conduit	Aug. 1, 2014	
* 80354	56		Sidewalk, Corner, or Crosswalk Closure	Jan. 1, 2015	
80340	57		Speed Display Trailer	April 2, 2014	
80127	58		Steel Cost Adjustment	April 2, 2004	April 1, 2009
80317	59		Surface Testing of Hot-Mix Asphalt Overlays	Jan. 1, 2013	
* 80355	60		Temporary Concrete Barrier	Jan. 1, 2015	
80301	61		Tracking the Use of Pesticides	Aug. 1, 2012	
* 80356	62		Traffic Barrier Terminals Type 6 or 6B	Jan. 1, 2015	
20338	63		Training Special Provisions	Oct. 15, 1975	
80318	64		Traversable Pipe Grate	Jan. 1, 2013	April 1, 2014
80345	65		Underpass Luminaire	Aug. 1, 2014	
* 80357	66		Urban Half Road Closure with Mountable Median	Jan. 1, 2015	
80346	67		Waterway Obstruction Warning Luminaire	Aug. 1, 2014	
80288	68		Warm Mix Asphalt	Jan. 1, 2012	Nov. 1, 2014
80302	69		Weekly DBE Trucking Reports	June 2, 2012	
80289	70		Wet Reflective Thermoplastic Pavement Marking	Jan. 1, 2012	
80071	71		Working Days	Jan. 1, 2002	

The following special provisions are in the 2015 Supplemental Specifications and Recurring Special Provisions:

File Name	Special Provision Title	New Location	Effective	Revised
80292	Coarse Aggregate in Bridge Approach Slabs/Footings	Articles 1004.01(b) and 1004.02(f)	April 1, 2012	April 1, 2013
80303	Granular Materials	Articles 1003.04, 1003.04(c), and 1004.05(c)	Nov. 1, 2012	
80330	Pavement Marking for Bike Symbol	Article 780.14	Jan. 1, 2014	
80331	Payrolls and Payroll Records	Recurring CS #1 and #5	Jan. 1, 2014	
80332	Portland Cement Concrete – Curing of Abutments and Piers	Article 1020.13	Jan. 1, 2014	
80326	Portland Cement Concrete Equipment	Article 1103.03(a)(5)	Nov. 1, 2013	
80281	Quality Control/Quality Assurance of Concrete Mixtures	Recurring CS #31	Jan. 1, 2012	Jan. 1, 2014
80283	Removal and Disposal of Regulated Substances	Articles 669.01, 669.08, 669.09, 669.14, and 669.16	Jan. 1, 2012	Nov. 2, 2012
80319	Removal and Disposal of Surplus Materials	Article 202.03	Nov. 2, 2012	
80307	Seeding	Article 250.07	Nov. 1, 2012	
80339	Stabilized Subbase	Article 312.06	April 1, 2014	
80333	Traffic Control Setup and Removal Freeway/Expressway	Articles 701.18(l) and 701.19(a)	Jan. 1, 2014	

The following special provisions require additional information from the designer. The additional information needs to be included in a separate document attached to this check sheet. The Project Development and Implementation section will then include the information in the applicable special provision. The Special Provisions are:

- Bridge Demolition Debris
- Building Removal-Case I
- Building Removal-Case II
- Building Removal-Case III
- Building Removal-Case IV
- Completion Date
- Completion Date Plus Working Days
- DBE Participation
- Material Transfer Device
- Railroad Protective Liability Insurance
- Training Special Provisions
- Working Days

SPECIAL PROVISIONS CHECK LIST
Generated - 9/26/14 8:58 AM Revised – 1/09/15

Designer: CCDOTH **FAP:**
Contract No.: 1523-14815 **Section:** 14-PPRPS-01-PV
County: COOK

√	Dir	File Name	Spec Title	Spec Dates
	DES\	1048945R.DOC	Maintenance of Roadways	E 9/30/85 R 11/1/96
	DES\	1078948R.DOC	Tollway Permit and Bond	E 01/13/89
	DES\	1080301.doc	Restriction on Working Days After a Completion Date	E 01/21/03 R 01/01/07
	DES\	1086587r.doc	Failure to Complete the Work on Time	E 09/30/85 R 01/01/07
	DES\	1088949R.DOC	Completion Date Plus Working Days	E 09/30/85 R 01/01/07
	DES\	1088951R.DOC	Incentive Payment Plan	E 10/01/95 R 01/01/07
	DES\	2080101.doc	RAP For Non-Porous Embankment and Backfill	E 04/01/01 R 01/01/07
	DES\	4020211.doc	Aggregate Surface Course for Temporary Access	E 04/01/01 R 01/02/07
	DES\	4408955R.DOC	Pavement Removal, Special	E 01/13/89 R 01/01/07
	DES\	5028956R.DOC	Rock Excavation for Structures, Special	E 09/30/85 R 01/01/07
	DES\	5038957R.DOC	Rustication Finish For Retaining Walls	E 05/01/90 R 01/01/07
	DES\	5501234R.DOC	Storm Sewer Adjacent to or Crossing Water Main	E 02/01/96 R 01/01/07
	DES\	5508960R.DOC	Storm Sewers & Sewer Connections to City of Chicago Sewers	E 09/30/85 R 01/01/07
	DES\	6008961R.DOC	Slotted Drain	E 09/30/85 R 01/01/07
	DES\	6028962R.DOC	Cleaning Existing Drainage Structures	E 09/30/85 R 12/01/11
	DES\	6068964R.DOC	Concrete Curb, Type B (Modified)	E 09/30/85 R 01/01/07
	DES\	6068965R.DOC	Stabilized Median Surface	E 09/30/85 R 01/01/07
	DES\	6370499.doc	Aggregate For Concrete Barrier (D-1)	E 03/11/04 R 01/24/08
	DES\	7016789.DOC	Traffic Control & Protection (Arterials)	E 02/01/96 R 03/01/11
	DES\	9018967R.DOC	Traffic Control Plan	E 09/30/85 R 01/01/07
	DES\	Adjustments-Reconstructs.doc	Adjustments and Reconstructions	E 03/15/11
	DES\	AGG SUBGR IMPROVEMENT(D1).doc	Aggregate Subgrade Improvement (D1)	E 02/22/12 R 11/01/14
	DES\	Bit_Coated_Agg_Slopewall.doc	Bituminous Coated Aggregate Slopewall	E 01/01/07
	DES\	CA Backfill Trench Backfill Bedding (D1).doc	Coarse Aggregate for Backfill, Trench Backfill and Bedding (D-1)	E 11/01/11 R 11/01/13
	DES\	CAC-BMPR.doc	Calcium Aluminate Cement (BMPR)	E 07/01/13
	DES\	Conc_Noise_Abate_Wall(D1).docx	Concrete Noise Abatement Walls (Absorptive & Reflective)(Dist 1)	E 09/05/08 R 01/12/11
	DES\	CTA_Flag_Coordination.doc	CTA Flagging and Coordination	E 05/14/98 R 08/27/09
	DES\	Drain_Inlet_Prot_Undr_Traff(D1).doc	Drainage And Inlet Protection Under Traffic (D-1)	E 04/01/11 R 04/02/11
	DES\	Embankment_I.doc	Embankment I	E 03/01/11 R 11/01/13
	DES\	Embankment_II.doc	Embankment II	E 03/01/11 R 11/01/13
	DES\	ENG FIELD OFF TY A (SP).doc	Engineer's Field Office Type A (Special)	E 12/01/11 R 05/01/13
	DES\	Grade_Shape_Shldr.doc	Grading and Shaping Shoulders	E 12/28/01 R 01/01/07
	DES\	GTR Modified Binder(D-1).doc	Ground Tire Rubber (GTR) Modified Asphalt Binder (D-1)	E 06/29/06 R 01/01/13
	DES\	Heat of Hydration Ctrl (D1).doc	Heat of Hydration Control (D-1)	E 11/01/13
√	DES\	HMA Mix Des Reqmts(D-1).doc	HMA Mixture Design Requirements (D-1)	E 01/01/13 R 11/01/14
	DES\	HMA QCP (BMPR).doc	Hot Mix Asphalt Quality Control for Performance (BMPR)	E 01/01/12 R 12/01/14
	DES\	HMA Quantity Correction (BMPR).doc	Hot Mix Asphalt – Quantity Correction (BMPR)	E 10/01/14 R 10/02/14
	DES\	Hot in Place Recycle.doc	Pavement Rehabilitation by Hot In-Place Recycling	E 07/11/03 R 05/05/14
	DES\	LightwtCellularConcFill(D1).doc	Lightweight Cellular Concrete Fill (D-1)	E 11/11/01 R 02/28/13
	DES\	Pub_Conv_Sfty(D1).doc	Public Convenience and Safety (D-1)	E 05/01/12 R 07/15/12
√	DES\	RAP-RAS(D1).doc	Reclaimed Asphalt Pavement (RAP) and Reclaimed Asphalt Shingles (RAS) (D-1)	E 11/01/12 R 01/02/15
	DES\	Slipform Paving (D-1).doc	Slipform Paving (D-1)	E 11/01/14
	DES\	Status_Utility_Adj-90day.doc	Status Of Utilities To Be Adjusted	E 01/30/87 R 01/24/13
	DES\	TEMP_PVMT.doc	Temporary Pavement	E 03/01/03 R 04/10/08
	DES\	WINTERIZED TEMP ACCESS 3-5-	Winterized Temporary Access	E 01/01/12 R 03/05/12

SPECIAL PROVISIONS CHECK LIST
Generated - 9/26/14 8:58 AM Revised – 1/09/15

Designer: CCDOTH **FAP:**
Contract No.: 1523-14815 **Section:** 14-PPRPS-01-PV
County: COOK

		12.doc		
		Bureau of Electrical Special Provisions		
	ELE\	Elec_Serv_Disc_lgt_sig_2012.doc	Electric Service Disconnect, Lighting And Traffic Signal	E: 1/1/2012
	ELE\	General_Electrical_Provisions_2012.doc	General Electrical Requirements GPS	E 1/1/2012
	ELE\	HPS_Underpass_2012.doc	Underpass Luminaire, HPS, Stainless Steel Housing	E 1/1/2012
	ELE\	Junction_Box_Embedded_2012.doc	Junction Box Embedded In Structure	E 1/1/2012
	ELE\	Lighting_Controller_SCADA_2012.doc	Lighting Controller, Radio Control, Duplex, Console Type	E 1/1/2012
	ELE\	Lighting_Maint_2012.doc	Maintenance Of Lighting Systems	E 1/1/2012
	ELE\	Light_Tower_2012.doc	Light Tower	E 1/1/2012
	ELE\	Luminaire_2012.doc	Luminaire	E 1/1/2012
	ELE\	Luminaire_safety_cable_2012.DOC	Luminaire Safety Cable Assembly	E 1/1/2012
	ELE\	Protect_Underpass_LightingSystem_2012.doc	Protect & Maintain Underpass Luminaires	E 1/1/2012
	ELE\	Raceway_Exposed_2012.DOC	Exposed Raceways	E 1/1/2012
	ELE\	Raceway_Underground_2012.DOC	Underground Raceways	E 1/1/2012
	ELE\	Service_Connection_2012.doc	Electric Utility Service Connection (ComEd)	E 1/1/2012
	ELE\	Service_Install_2012.doc	Electric Service Installation	E 1/1/2012
	ELE\	Temp_light_SingleLaneStg_2012.doc	Temporary Lighting For Single Lane Staging	E 01/01/2012
	ELE\	Temp_pole_install_2012.DOC	Temporary Wood Pole, Install Only	E 1/1/2012
	ELE\	Unit_Duct_2012.DOC	Unit Duct	E 1/01/2012
	ELE\	Wire_Cable_2012.doc	Wire and Cable	E 1/1/2012
		Guide Bridge Special Provisions		
	GBS\	gbsp04.doc	Polymer Modified Portland Cement Mortar	E 6/7/94 R 07/26/13
	GBS\	gbsp12.doc	Drainage System	E 06/10/94 R 01/01/07
	GBS\	gbsp13.doc	Floating Bearings	E 10/13/88 R 10/30/12
	GBS\	gbsp14.doc	Jack and Remove Existing Bearings	E 04/20/94 R 01/01/07
	GBS\	gbsp15.doc	Three Sided Precast Concrete Structure	E 07/12/94 R 10/15/11
	GBS\	gbsp16.doc	Jacking Existing Superstructure	E 01/11/93 R 01/01/07
	GBS\	gbsp17.doc	Bonded Preformed Joint Seal	E 07/12/94 R 01/01/07
	GBS\	gbsp18.doc	Modular Expansion Joint	E 5/19/94 R 04/18/14
	GBS\	gbsp21.doc	Cleaning and Painting Contact Surfaces of Existing Steel Structures	E 05/15/91 R 05/18/11
	GBS\	GBSP25.doc	Cleaning and Painting Existing Steel Structures	E 10/02/01 R 04/19/12
	GBS\	GBSP26.doc	Containment and Disposal of Lead Paint Cleaning Residues	E 10/02/01 R 04/30/10
	GBS\	gbsp28.doc	Deck Slab Repair	E 05/15/95 R 10/15/11
	GBS\	gbsp29.doc	Bridge Deck Microsilica Concrete Overlay	E 05/15/95 R 10/30/12
	GBS\	GBSP30.doc	Bridge Deck Latex Concrete Overlay	E 05/15/95 R 01/18/11
	GBS\	gbsp31.doc	Bridge Deck HRM Concrete Overlay	E 01/21/00 R 10/30/12
	GBS\	gbsp32.doc	Temporary Sheet Piling	E 090/2/94 R 01/31/12
	GBS\	gbsp33.doc	Pedestrian Truss Superstructure	E 1/13/98 R 04/18/14
	GBS\	GBSP34.doc	Concrete Wearing Surface	E 6/23/94 R 02/06/13
	GBS\	GBSP35.doc	Silicone Bridge Joint Sealer	E 08/01/95 R 10/15/11
	GBS\	GBSP38.doc	Mechanically Stabilized Earth Retaining Walls	E 02/03/99 R 08/29/14
	GBS\	GBSP42.doc	Drilled Soldier Pile Retaining Wall	E 09/20/01 R 01/03/14
	GBS\	GBSP43.doc	Driven Soldier Pile Retaining wall	E 11/13/02 R 01/03/14
	GBS\	GBSP44.doc	Temporary Soil Retention System	E 12/30/02 R 05/11/09
	GBS\	GBSP45.doc	Bridge Deck Thin Polymer Overlay	E 05/07/97 R 02/06/13
	GBS\	GBSP46.doc	Geotextile Retaining walls	E 09/19/03 R 07/26/13
	GBS\	GBSP51.doc	Pipe Underdrains for Structures	E 05/17/00 R 01/22/10

SPECIAL PROVISIONS CHECK LIST
Generated - 9/26/14 8:58 AM Revised – 1/09/15

Designer: CCDOTH **FAP:**
Contract No.: 1523-14815 **Section:** 14-PPRPS-01-PV
County: COOK

	GBS\	GBSP53.doc	Structural Repair of Concrete	E 03/15/06 R 08/29/14
	GBS\	GBSP55.doc	Erection of Curved Steel Structures	E 06/01/07
	GBS\	GBSP56.doc	Setting Piles In Rock	E 11/14/96 R 04/19/12
	GBS\	GBSP57.doc	Temporary Mechanically Stabilized Earth Retaining Walls	E 01/06/03 R 08/29/14
	GBS\	GBSP59.doc	Diamond Grinding and Surface Testing Bridge Sections	E 12/06/04 R 01/03/14
	GBS\	GBSP60.doc	Containment and Disposal of Non Lead Paint Cleaning Residues	E 11/25/04 R 03/06/09
	GBS\	GBSP61.doc	Slipform Parapet	E 06/01/07 R 08/17/12
	GBS\	GBSP62.doc	Concrete Deck Beams	E 06/13/08 R 10/09/09
	GBS\	GBSP64.doc	Segmental Concrete Block Wall	E 01/07/99 R 10/30/12
	GBS\	GBSP65.doc	Precast Modular Retaining Wall	E 03/19/01 R 01/03/14
	GBS\	gbsp67.doc	Structural Assessment Reports for Contractor's Means and Methods	E 03/06/09
	GBS\	GBSP70.doc	Braced Excavation	E 08/09/95 R 05/18/11
	GBS\	GBSP71.doc	Aggregate Column Ground Improvement	E 01/15/09 R 10/15/11
	GBS\	GBSP72.doc	Bridge Deck Fly Ash or Ground Granulated Blast-Furnace Concrete Overlay	E 01/18/11 R 10/15/11
	GBS\	GBSP73.doc	Cofferdams	E 10/15/11 R
	GBS\	GBSP74.doc	Permanent Steel Sheet Piling (LRFD)	E 01/31/12 R 08/17/12
	GBS\	GBSP75.doc	Bond Breaker for Prestressed Concrete Bulb-T Beams	E 04/19/12 R
	GBS\	GBSP76.doc	Granular Backfill for Structures	E 04/19/12 R 10/30/12
	GBS\	GBSP77.doc	Weep Hole Drains for Abutments, Wingwalls, Retaining Walls and Culverts	E 04/19/12 R 10/22/13
	GBS\	GBSP78.doc	Bridge Deck Construction	E 10/22/13 R 04/18/14
	GBS\	GBSP80.doc	Fabric Reinforced Elastomeric	E 08/29/14
	GBS\	index.doc	GBSP Check Sheet	E 11/07/14
			Bridge and Roadway Maintenance Special Provisions	
	MNT1\	ADJRCK.doc	Adjust Rocker and Sole Plate	E 01/23/95 R 01/01/07
	MNT1\	APPR_SLAB_REM&REPL.doc	Approach Slab Removal & Replacement	E 12/28/01 R 01/01/07
	MNT1\	APSLRP.DOC	Approach Slab Repair	E 03/13/97 R 09/25/09
	MNT1\	Bmstrt.doc	Beam Straightening	E 12/06/94 R 01/01/07
	MNT1\	Br-Dk-Conc-Sealer.doc	Bridge Deck Concrete Sealer	E 06/17/10 R 07/01/12
	MNT1\	Brgpad.doc	Bearing Pad Adjustment	E 07/27/94 R 01/01/07
	MNT1\	Bridge_Drain_Sys_Repair.doc	Bridge Drainage System Repairs	E 11/16/10 R 09/15/11
	MNT1\	BRR.doc	Bridge Rail Removal	E 04/15/99 R 01/01/07
	MNT1\	Cleaning Drainage System.doc	Cleaning Drainage System	E 06/21/04 R 08/30/10
	MNT1\	Concscar.doc	Concrete Bridge Deck Scarification [W/New HMA Overlay W/O WMS]	E 11/22/02 R 01/01/07
	MNT1\	CWS.DOC	Concrete Wearing Surface [Use on Slab Bridges - for PPC Dk Bms use GBSP34]	E 06/23/94 R 01/01/07
	MNT1\	Debris_Removal.doc	Debris Removal	E 06/27/02
	MNT1\	dowelrp.doc	Dowel Repair	E 07/27/94 R 01/01/07
	MNT1\	EPXINJ.DOC	Epoxy Injection	E 12/06/94 R 01/01/07
	MNT1\	Fldrex.doc	Floor Drain Extension	E 02/01/96 R 04/07/98
	MNT1\	Grade_Shape_Foreslope.doc	Grading And Shaping Foreslopes	E 04/01/08
	MNT1\	Groutrp.doc	Grout Repair	E 07/27/94 R 01/01/07
	MNT1\	HMArm1.doc	Hot-Mix Asphalt Surface Removal Complete	E 12/08/93 R 01/01/07
	MNT1\	HMArm2.DOC	Hot-Mix Asphalt Surface Removal [Use w/ PPC Deck Beams]	E 07/27/94 R 01/01/07
	MNT1\	HMArm3.doc	Hot-Mix Asphalt Surface Removal (Deck)	E 04/29/96 R 01/01/07
	MNT1\	HMArm4.doc	Hot-Mix Asphalt Surface Removal [Use w/Deck Slab Repairs]	E 07/27/94 R 01/01/07
	MNT1\	Jckcrb.doc	Jacking and Cribbing	E 10/05/99 R 01/01/07
	MNT1\	JKRPBR.DOC	Jack and Reposition Bearings	E 12/15/93 R 07/15/96
	MNT1\	Keep_Toll_Open_To_Traffic.doc	Keeping the Tollway Open to Traffic	E 03/22/96 R 10/12/10
	MNT1\	Keywyrp.doc	Keyway Repair	E 07/27/94 R 08/12/11
	MNT1\	NIGHT_WZ_LIGHT(D1).doc	Nighttime Work Zone Lighting (D1)	E 11/01/08 R 06/15/10

SPECIAL PROVISIONS CHECK LIST
Generated - 9/26/14 8:58 AM Revised – 1/09/15

Designer: CCDOTH **FAP:**
Contract No.: 1523-14815 **Section:** 14-PPRPS-01-PV
County: COOK

	MNT1\	Paint Warranty7.doc	Warranty for Cleaning and Painting Steel Structures	E 03/03/00 R 11/24/04
	MNT1\	PINLNK.DOC	Pin and Link Replacement	E 11/20/95 R 06/20/96
	MNT1\	PINRR.DOC	Pin Replacement	E 06/11/96 R 06/20/96
	MNT1\	plexdd.doc	Plug Existing Deck Drains	E 11/06/96 R 01/01/07
	MNT1\	PPROSH.DOC	Permanent Protective Shield System	E 10/03/96 R 06/27/08
	MNT1\	PrGrAng.doc	Pressure Grouting Angles	E 06/01/93 R 01/01/07
	MNT1\	reancr.doc	Re-Anchor Existing Expansion Joint Angles	E 02/20/98
	MNT1\	REBAR.DOC	Cleaning and Painting Exposed Rebar	E 03/20/97 R 01/01/07
	MNT1\	RECIBm.doc	Removal of Existing Concrete I-Beam	E 07/09/98 R 05/05/99
	MNT1\	REXPPCDB.doc	Removal of Existing Precast Prestressed Concrete Deck Beams	E 10/28/98 R 01/01/07
	MNT1\	RREXRL.DOC	Removing and Re-Erecting Existing Railing	E 10/31/96 R 01/01/07
	MNT1\	Scarify.doc	Concrete Bridge Deck Scarification	E 05/15/95 R 01/01/07
	MNT1\	SteelRem.doc	Structural Steel Removal	E 10/03/97 R 01/01/07
	MNT1\	steelrep.doc	Structural Steel Repair	E 12/15/00 R 01/01/07
	MNT1\	STRBM.DOC	Straighten Bent Members	E 01/23/97 R 06/19/06
	MNT1\	StructRepConcr(SP).doc	Structural Repair Of Concrete (Special)	E 04/02/07
	MNT1\	Tmpsh1.doc	Temporary Shoring & Cribbing [when req'd for damaged beam replacement; requires SE]	E 06/16/92 R 03/11/03
	MNT1\	Tmpsh1a.doc	Temporary Shoring & Cribbing [when "May be req'd" for or Day Labor beam replacement; No SE req'd]	E 06/16/92 R 04/22/03
	MNT1\	Tmpsh2.doc	Temporary Shoring and Cribbing [for use w/longitudinal joint. closure on slab bridges]	E 07/27/94 R 03/11/03
	MNT1\	TMPSH3.DOC	Temporary Shoring and Cribbing [Use during Pile Repair]	E 07/16/92 R 03/11/03
	MNT1\	TMPSH4.DOC	Temporary Shoring and Cribbing [Use to support Beams over substructure repair]	E 7/16/92 R 10/17/11
	MNT1\	TMPSH5.DOC	Temporary Shoring and Cribbing [Support Slab Bridge during Joint reconstruction]	E 07/16/92 R 03/11/03
	MNT1\	TMPSH6.DOC	Temporary Shoring and Cribbing [support effected beam during beam end repairs]	E 10/22/04 R 11/09/04
	MNT1\	TMPSLB.DOC	Temporary Slab Support System [use with beam replacement]	E 07/27/94 R 03/11/03
	MNT1\	TMPSP1.DOC	Temporary Support System [Use for Pin & Link Replacement]	E 11/20/95 R 04/04/97
	MNT1\	TMPSP2.DOC	Temporary Support System [Use if Pins over RR]	E 11/20/95 R 03/11/03
	MNT1\	Work_Zone_Traff_Ctrl(D1-M).doc	Work Zone Traffic Control (D-1 Maintenance)	E 05/30/96 R 06/15/10
	MNT2\	COARSE SAND PLACEMENT.doc	Coarse Sand Placement	E 02/07/07
	MNT2\	GENERAL REQUIREMENTS FOR WEED CONTROL SPRAYING.doc	General Requirements For Weed Control Spraying	E 02/07/07
	MNT2\	MULCH PLACEMENT FOR WOODY PLANTS.doc	Mulch Placement For Woody Plants	E 02/07/07
	MNT2\	Pruning-safety.doc	Pruning For Safety And Equipment Clearance	E 10/31/06
	MNT2\	SELECTIVE CLEARING.doc	Selective Clearing	E 02/08/07
	MNT2\	WEED CONTROL PRE-EMERGENT GRANULAR HERBICIDE.doc	Weed Control, Pre-Emergent Granular Herbicide	E 07/29/02 R 02/07/07
	MNT2\	WEED CONTROL, NON-SELECTIVE AND NON-RESIDUAL.doc	Weed Control, Non-Selective And Non-Residual	E 02/07/07
	MNT2\	WEED CONTROL, TEASEL (POUND).doc	Weed Control, Teasel (Pound)	E 02/07/07

Bureau of Traffic Special Provisions

SPECIAL PROVISIONS CHECK LIST
Generated - 9/26/14 8:58 AM Revised – 1/09/15

Designer: CCDOTH **FAP:**
Contract No.: 1523-14815 **Section:** 14-PPRPS-01-PV
County: COOK

	TRF\	7030001T.DOC	Type III Temporary Tape For Wet Conditions	E 02/01/11
	TRF\	8500002T.DOC	Full-Actuated Controller And Cabinet (Special)	E 1/1/02 Rev 1/1/07
	TRF\	8500003T.DOC	Master Controller (Special)	E 01/01/97 R 01/01/07
	TRF\	8500004T.DOC	Full-Actuated Controller (Special)	E 9/26/95 Rev 1/1/07
	TRF\	8500005T.DOC	Modify Existing Type "D" Foundation	E 01/01/97 R 01/01/07
	TRF\	8500006T.DOC	Rebuild Existing Handhole	E 01/01/97 R 01/01/07
	TRF\	8500007T.DOC	Rebuild Existing Handhole To Heavy-Duty Handhole	E 01/01/97 R 01/01/07
	TRF\	8500008T.DOC	Relocate Existing Emergency Vehicle Priority System, Detector Unit	E 10/01/97 R 01/01/07
	TRF\	8500009T.DOC	Confirmation Beacon	E 01/01/02 R 01/01/07
	TRF\	8500010T.DOC	Relocate Existing Emergency Vehicle Priority System, Phasing Unit	E 01/01/02 R 01/01/07
	TRF\	8500011T.DOC	Detector Loop Replacement/ Installation On Resurfacing/Patching	E 01/01/85 R 01/01/07
	TRF\	8500012T.DOC	Flashing Beacon Installation	E 01/01/07
	TRF\	8500014T.DOC	Rr Full-Actuated Controller And Cabinet (Special)	E 1/1/07
	TRF\	8500015T.DOC	Rr Full-Actuated Controller And Cabinet	E 1/1/07
	TRF\	9010001X.DOC	Keeping The Expressway Open To Traffic	E 03/22/96 R 02/13/14
	TRF\	9010002X.DOC	Failure To Open Traffic Lanes To Traffic	E 03/22/96 R 02/09/05
	TRF\	9010003X.doc	Traffic Control And Protection (Expressways)	E 03/08/96 R 02/13/14
	TRF\	9010004X.DOC	Traffic Control Surveillance (Expressways)	E 10/25/95 R 01/09/98
	TRF\	9010005X.DOC	Traffic Control Surveillance (Special)	E 10/25/95 R 01/01/07
	TRF\	9010006X.DOC	Temporary Information Signing	E 11/13/96 R 01/02/07
	TRF\	9010009X.DOC	Traffic Control For Work Zone Areas	E 09/14/95 R 01/01/07
	TRF\	D1 TS Specs 2012.doc	Traffic Signal Specifications (Dist. 1)	E 01/01/02 R 01/01/12
	TRF\	Hot Spray Thermo.doc	45 Mil Hot Spray Thermoplastic Pavement Marking	E 02/28/94 R 12/18/12
	TRF\	Keep Arterials Open to Traffic.doc	Keeping Arterial Roadways Open To Traffic	E 01/22/03 R 01/01/07
	TRF\	Sign Shop Drawing Submittal.doc	Sign Shop Drawing Submittal	E 01/01/13

FOLLOWING ARE THE CURRENT BDE SPECIAL PROVISIONS ISSUED BY THE CENTRAL BUREAU OF DESIGN AND ENVIRONMENT. PRELIMINARY AND FINAL SPECIAL PROVISIONS THAT ARE DISTRIBUTED FOR DISTRICT OR OUTSIDE AGENGY REVIEW SHOULD INCLUDE A COPY OF EACH APPLICABLE BDE SPECIAL PROVISION. FINAL SUBMITTAL TO THE CENTRAL OFFICE SHOULD ONLY INCLUDE THE BDE SPECIAL PROVISION CHECK SHEET WITH THE APPLICABLE SPECIAL PROVISIONS CHECKED.

	ZD&E\	20338.doc	TRAINING SPECIAL PROVISIONS	E 10/15/75
	ZD&E\	3426I.doc	RAILROAD PROTECTIVE LIABILITY INSURANCE	E 12/01/86 R 01/01/06
	ZD&E\	5026I.doc	BUILDING REMOVAL - CASE I (NON-FRIABLE AND FRIABLE ASBESTOS ABATEMENT)	E 09/01/90 R 04/01/10
	ZD&E\	5048I.doc	BUILDING REMOVAL - CASE II (NON-FRIABLE ASBESTOS ABATEMENT)	E 09/01/90 R 04/01/10
	ZD&E\	5049I.doc	BUILDING REMOVAL - CASE III (FRIABLE ASBESTOS ABATEMENT)	E 09/01/90 R 04/01/10
	ZD&E\	5053I.doc	BUILDING REMOVAL - CASE IV (NO ASBESTOS)	E 09/01/90 R 04/01/10
	ZD&E\	80029.doc	DISADVANTAGED BUSINESS ENTERPRISE PARTICIPATION	E 09/01/00 R 08/02/11
	ZD&E\	80045.doc	MATERIAL TRANSFER DEVICE	E 06/15/99 R 08/01/14
	ZD&E\	80071.doc	WORKING DAYS	E 01/01/02
	ZD&E\	80099.doc	ACCESSIBLE PEDESTRIAN SIGNALS (APS)	E 04/01/03 R 01/01/14
	ZD&E\	80127.doc	STEEL COST ADJUSTMENT	E 04/02/04 R 04/01/09
	ZD&E\	80157.doc	RAILROAD PROTECTIVE LIABILITY INSURANCE (5 AND 10)	E 01/01/06
	ZD&E\	80165.doc	MOISTURE CURED URETHANE PAINT SYSTEM	E 11/01/06 R 01/01/10
	ZD&E\	80173.doc	BITUMINOUS MATERIALS COST ADJUSTMENTS	E 11/2/06 R 08/01/13
	ZD&E\	80192.doc	AUTOMATED FLAGGER ASSISTANCE DEVICES	E 01/01/08
	ZD&E\	80198.doc	COMPLETION DATE (VIA CALENDAR DAYS)	E 04/01/08
	ZD&E\	80199.doc	COMPLETION DATE (VIA CALENDAR DAYS) PLUS WORKING DAYS	E 04/01/08
	ZD&E\	80229.doc	FUEL COST ADJUSTMENT	E 04/01/09 R 07/01/09

SPECIAL PROVISIONS CHECK LIST
Generated - 9/26/14 8:58 AM Revised – 1/09/15

Designer: CCDOTH **FAP:**
Contract No.: 1523-14815 **Section:** 14-PPRPS-01-PV
County: COOK

	ZD&E\	80240.doc	ABOVE GRADE INLET PROTECTION	E 07/01/09 R 01/01/12
	ZD&E\	80241.doc	BRIDGE DEMOLITION DEBRIS	E 07/01/09
	ZD&E\	80246.doc	HOT-MIX ASPHALT - DENSITY TESTING OF LONGITUDINAL JOINTS	E 01/01/10 R 04/01/2012
	ZD&E\	80254.doc	PAVEMENT PATCHING	E 01/01/10
	ZD&E\	80261.doc	CONSTRUCTION AIR QUALITY-DIESEL RETROFIT	E 06/01/10 R 11/01/14
	ZD&E\	80265.doc	FRICTION AGGREGATE	E 01/01/11 R 11/01/14
	ZD&E\	80274.doc	AGGREGATE SUBGRADE IMPROVEMENT	E 04/01/12 R 01/01/13
	ZD&E\	80277.doc	Concrete Mix Design - Department Provided	E 01/01/12 R 01/01/14
	ZD&E\	80288.doc	WARM MIX ASPHALT	E 01/01/12 R 11/01/14
	ZD&E\	80289.doc	WET REFLECTIVE THERMOPLASTIC PAVEMENT MARKING	E 01/01/12
	ZD&E\	80293.doc	Concrete Box Culverts with Skews > 30 Degrees and Design Fills ≤ 5 Feet	E 04/01/12 R 04/01/14
	ZD&E\	80294.doc	CONCRETE BOX CULVERTS WITH SKEWS ≤ 30 DEGREES REGARDLESS OF DESIGN FILL AND SKEWS > 30 DEGREES WITH DESIGN FILLS > 5 FEET	E 04/01/12 R 04/01/14
	ZD&E\	80298.doc	PAVEMENT MARKING TAPE TYPE IV	E 04/01/12
	ZD&E\	80300.doc	PREFORMED PLASTIC PAVEMENT MARKING TYPE D - INLAID	E 04/01/12
	ZD&E\	80301.doc	TRACKING THE USE OF PESTICIDES	E 08/01/12
	ZD&E\	80302.doc	WEEKLY DBE TRUCKING REPORTS	E 06/02/12
	ZD&E\	80304.doc	GROOVING FOR RECESSED PAVEMENT MARKINGS	E 11/01/12 R 08/01/14
	ZD&E\	80306.doc	RECLAIMED ASPHALT PAVEMENT AND RECLAIMED ASPHALT SHINGLES	E 11/01/12 R 04/01/14
	ZD&E	80310.doc	COATED GALVANIZED STEEL CONDUIT	E 01/01/13 R 01/01/15
	ZD&E\	80311.doc	CONCRETE END SECTIONS FOR PIPE CULVERTS	E 01/01/13
	ZD&E\	80315.doc	INSERTION LINING OF CULVERTS	E 01/01/13 R 11/01/13
	ZD&E\	80317.doc	SURFACE TESTING OF HOT-MIX ASPHALT OVERLAYS	E 01/01/13
	ZD&E\	80318.doc	TRAVERSABLE PIPE GRATE	E 01/01/13 R 04/01/14
	ZD&E\	80322.doc	HOT-MIX ASPHALT - MIXTURE DESIGN COMPOSITION AND VOLUMETRIC REQUIREMENTS	E 11/01/13 R 11/01/14
	ZD&E\	80323.doc	HOT-MIX ASPHALT - MIXTURE DESIGN VERIFICATION AND PRODUCTION	E 11/01/13 R 11/01/14
	ZD&E\	80324.doc	LFRD PIPE CULVERT BURIAL TABLES	E 11/01/13 R 11/01/14
	ZD&E\	80325.doc	LRFD PIPE CULVERT BURIAL TABLES	E 11/01/13 R 11/01/14
	ZD&E\	80327.doc	REINFORCEMENT BARS	E 11/01/13
	ZD&E\	80328.doc	PROGRESS PAYMENTS	E 11/02/13
	ZD&E\	80329.doc	GLARE SCREEN	E 01/01/14
	ZD&E\	80334.doc	CONCRETE GUTTER, CURB, MEDIAN, AND PAVED DITCH	E 04/01/14 R 08/01/14
	ZD&E\	80335.doc	CONTRACT CLAIMS	E 04/01/14
	ZD&E\	80336.doc	LONGITUDINAL JOINT AND CRACK PATCHING	E 04/01/14
	ZD&E\	80337.doc	PAVED SHOULDER REMOVAL	E 04/01/14
	ZD&E\	80338.doc	PORTLAND CEMENT CONCRETE PARTIAL DEPTH HOT-MIX ASPHALT PATCHING	E 04/01/14
	ZD&E\	80340.doc	SPEED DISPLAY TRAILER	E 04/02/14
	ZD&E\	80341.doc	COILABLE NONMETALLIC CONDUIT	E 08/01/14 R 01/01/15
	ZD&E\	80342.doc	MECHANICAL SIDE TIE BAR INSERTER	E 08/01/14 R 01/01/15
	ZD&E\	80343.doc	PRECAST CONCRETE HANDHOLE	E 04/01/14
	ZD&E\	80344.doc	RIGID METAL CONDUIT	E 08/01/14
	ZD&E\	80345.doc	UNDERPASS LUMINAIRE	E 08/01/14
	ZD&E\	80346.doc	WATERWAY OBSTRUCTION WARNING LUMINAIRE	E 08/01/14
	ZD&E\	80347.doc	HOT-MIX ASPHALT - PAY FOR PERFORMANCE USING PERCENT WITHIN LIMITS-JOBSITE SAMPLING	E 11/01/14
	ZD&E\	80348.doc	HOT-MIX ASPHALT - PRIME COAT	E 11/01/14
	ZD&E\	80349.doc	PAVEMENT MARKING BLACKOUT TAPE	E 11/01/14
	ZD&E\	80350.doc	RETROREFLECTIVE SHEETING FOR HIGHWAY SIGNS	E 11/01/14
	ZD&E\	80351.doc	LIGHT TOWER	E 01/01/15
	ZD&E\	80352.doc	PAVEMENT STRIPING - SYMBOLS	E 01/01/15

SPECIAL PROVISIONS CHECK LIST
Generated - 9/26/14 8:58 AM Revised – 1/09/15

Designer:	CCDOTH	**FAP:**	
Contract No.:	1523-14815	**Section:**	14-PPRPS-01-PV
		County:	COOK

ZD4E1	[illegible]	PORTLAND CEMENT CONCRETE INLAY OR OVERLAY	E 01/09/15
ZD4E1	[illegible]	SIDEWALK CORNER OR CROSSWALK CLOSURE	E 01/09/15
ZD4E1	[illegible]	TEMPORARY CONCRETE BARRIER	E 01/09/15
ZD4E1	[illegible]	TRAFFIC BARRIER TERMINALS TYPE 6 OR 6B	E 01/09/15
ZD4E1	[illegible]	URBAN HALF ROAD CLOSURE WITH MOUNTABLE MEDIAN	E 01/09/15

BY ORDER

BOARD OF COUNTY COMMISSIONERS

THE COUNTY OF COOK

SHANNON E. ANDREWS

CHIEF PROCUREMENT OFFICER

JOHN J. YONAN, P.E.

SUPERINTENDENT OF DEPARTMENT OF TRANSPORTATION AND HIGHWAYS

DEFINITION OF TERMS

PLANS. The plans herein referred to are those prepared by the County Superintendent of Department of Transportation and Highways. The plans which cover the proposed improvement are designated by the section and route numbers inscribed herein and include all standard and special designs pertaining to the proposed improvement.

SPECIFICATIONS. The specifications herein referred to are the Standard Specifications for Road and Bridge Construction, Supplemental Specifications, the special provisions and all written agreements and documents of any description pertaining to the method or manner of performing the work and the quantity or quality of materials to be furnished under the contract. The Standard Specifications for Road and Bridge Construction are those prepared by the Department of Transportation of the State of Illinois, adopted January 1, 2012. The Supplemental Specifications are those prepared by the Department of Transportation of the State of Illinois.

INTENT OF PLANS AND SPECIFICATIONS. The intent of those plans and specifications is to prescribe a complete outline of the proposed improvement which the Contractor undertakes to construct in full compliance with the contract. In case of discrepancy, plans shall govern over Standard and Supplemental Specifications and Special Provisions shall govern over plans and specifications.

ABOUT REQUESTS FOR PLANS & PROPOSALS

The Specification can be downloaded at **http://legacy.purchasing/public/index.php** (follow online instructions to register, if you have not already). When the plans are not included in the bid document on the http site, you must also download the Plans (Drawings) at **ftp://highwayftp.cookcountyil.gov** (user name: **highwaypublic**; password: **ftpt3st!**).

A compact disk containing the bid documents will be available at the Cook County Building, 118 North Clark Street, Chicago, IL 60602 at Room 1018. One compact disk per company at no charge.

INFORMATION for BIDDERS

1) If the prospective bidder is in doubt as to the meaning of any part of the plans, specifications of other proposed contract documents, they may submit a written clarification to the Chief Procurement Officer (CPO) for an interpretation thereof. The prospective bidder submitting the request will be responsible for the prompt delivery to the Chief Procurement Officer. Any interpretation of the proposal documents will be made by an addendum duly issued through the Cook County Purchasing website.

2) An estimate of quantities of work to be done and material to be furnished under the specifications will be found in the Schedule of Prices. It is the result of calculations and is given as a basis for a comparison of bids and award of a contract.

3) The bidder should include in the bid price in his bid for any taxes such as Occupational, Social Security, Unemployment Compensation, etc., which he might be required to pay in connection with the construction of the proposed improvement. The County of Cook will not reimburse the Contractor for the payment of any such taxes.

4) The Board of County Commissioners for the County of Cook reserves the right to reject any or all bids and to waive technicalities of form. Bids may be rejected if current work being performed for the County of Cook by the bidder has been unsatisfactory from the standpoint of workmanship or progress, or if the contractor has been awarded work by others subsequent to the issuance of the bid, which may, in the judgment of said Board of County Commissioners of Cook County endanger the prompt completion of the proposed improvement.

5) The bidder shall include in his bid a Bid Guarantee in accordance with provisions contained in the proposal form. The return of the bid guarantee will be in accordance with provisions contained in the bid form.

6) The bidder who submits the bid shall furnish a satisfactory Surety Bond in the amount of one hundred percent (100%) of the contract price within **fourteen (14) days** after receiving notice of acceptance. Such acceptance being contingent upon the fulfillment of this requirement by said bidder. Failure on the part of said bidder to so execute a Contract and Surety Bond shall be considered just cause for the forfeiture of the bid guaranty as payment of liquidated damages sustained by the County of Cook as the result of such, and the annulment of acceptance of the proposal.

7) If bidder is submitting a bid as a Joint Venture, bidder shall complete the County's Joint Venture Forms and shall submit such Joint Venture Forms **when the bid is submitted**. Bidder is reminded that compliance with the Assumed Business Name Act (805 ILCS 405/1 et seq.) is required of all Joint Ventures.

8) **The following completed documents are to be submitted <u>with1 original and 2 copies of the Bid</u>:**

Joint Venture Forms	1 original
Bituminous Materials Cost Adjustments (when applicable)	1 original
Economic Disclosure Statement and Execution Documents:	
IDOT Certificate of Eligibility	1 copy
IDOT Affidavit of Availability	1 copy
MBE/WBE Utilization Plan	1 copy
Letter of Intent from MBE/WBE to Perform as Subcontractor, Supplier and/or Consultant	1 copy
Petition for Reduction/Waiver of MBE/WBE Participation Goals	1 original
MBE/WBE Certification Letters (Current)	1 copy
Contractor Certifications	1 original
Economic and Other Required Disclosures	1 original
Lobby, Local Business Preference, Real Estate Ownership	1 original
Affidavit of Child Support Obligations	1 original
Disclosure of Ownership Interest Statement	1 original
Familial Relationship Disclosure Provision	1 original
Certification Concerning Labor Standards And Prevailing Wage Requirements	1 original
Subcontractors Certification Concerning Labor Standards and Prevailing Wage Requirements	1 original
Execution Pages:	
Sole Proprietor Signature Page	3 originals
Partnership and/or Joint Venture Signature Page	3 originals
Corporation Signature Page	3 originals
Bid Deposit Form	1 original
Proposal Bid Bond	1 original
Surety Statement of Qualifications	1 original

The following documents are to be submitted subsequent to notice of acceptance <u>within fourteen (14) calendar days</u>:

Performance and Payment Bond	1 original
Certificates of Insurance evidencing:	
Worker's Compensation and Employer's Liability	1 original
Commercial General Liability	1 original
Commercial Automobile Liability	1 original
Excess Liability	1 original
Contractor's Pollution Liability	1 original (if required)
Railroad Protective Liability (when applicable)	1 original
Trust Agreement	1 original

Please forward documents due within fourteen (14) days of notice of acceptance to:

Cook County Department of Transportation and Highways
Contract Documents
69 West Washington Street
Suite 2400
Chicago, IL 60602

SPECIAL PROVISION
FOR
BIDDING REQUIREMENTS AND CONDITIONS FOR CONTRACT PROPOSALS

Qualification of Bidders

The Awarding Authority for contract construction work is the County Board of a County. Each prospective bidder, in evidence of competence, shall furnish the Awarding Authority a certified copy of a "Certificate of Eligibility" issued by the Illinois Department of Transportation, and Contractor's Statement of Experience and Financial Condition" with their bid. Each prospective bidder shall furnish a sworn statement as to equipment owned and controlled, previous experience and construction work.

If the bidder to whom the award is made is a corporation organized under the laws of the State other than Illinois, the bidder shall furnish the Awarding Authority a copy of the corporation's Certificate of Authority to do business in the State of Illinois with the bid.

The bidder must provide the Awarding Authority a sworn Affidavit of Availability showing all uncompleted contracts awarded to them and all low bids pending award for Federal, State, County, Municipal and private work in the bid. The bidder should file two (2) copies of same with IDOT's District office.

Interpretation of Quantities in the Bid Schedule

The quantities appearing in the bid schedule are approximate and are prepared for the comparison of bids. Payment to the Contractor will be made only for the actual quantities of work performed and accepted or materials furnished according to the contract. The scheduled quantities of work to be done and materials to be furnished may be increased, decreased, or omitted as hereinafter provided.

Examination of Plans, Specifications, Special Provisions, and Site of Work

The bidder shall, before submitting a bid, carefully examine the provisions of the contract. The bidder shall inspect in detail the site of the proposed work, investigate and become familiar with all the local conditions affecting the contract and fully acquaint themselves with the detailed requirements of construction. Submission of a bid shall be a conclusive assurance and warranty the bidder has made these examinations and the bidder understands all requirements for the performance of the work. If the submitted bid is accepted, the bidder shall be responsible for all errors in the bid resulting from the bidder's failure or neglect to comply with these instructions. The Awarding Authority will, in no case, be responsible for any costs, expenses, losses, or change in anticipated profits resulting from such failure or neglect of the bidder to make these examinations.

The bidder shall take no advantage of any error or omission in the bid documents and advertised contract. Any prospective bidder who desires an explanation or interpretation of the plans, specification, or any of the contract documents shall request such in writing from the Awarding Authority in sufficient time to allow a written reply by the Awarding Authority that can reach all prospective bidders before the submission of their bids. Any reply given a prospective bidder concerning any of the contract documents, plans, and specifications will be furnished to all prospective bidders in the form determined by the Awarding Authority including, but not limited to, an addendum, if the information is deemed by the Awarding Authority to be necessary in submitting bids or if the Awarding Authority concludes the information would aid competition. Oral explanations, interpretations, or instructions given before the submission of bids unless at a prebid conference will not be binding on the Awarding Authority.

Changes in Improvement

The undersigned agrees that in case the Superintendent of Cook County Department of Transportation and Highways decides either to extend or decrease the area of the proposed improvement or to do both or otherwise alter it by extras or deductions including the elimination of any one or more of the quantities listed in the Schedule of Prices the undersigned will make such change in the contract price by adding or subtracting there from as the case may be by applying the respective unit prices to the quantities of the several items of work that may be involved by reason of such change.

Preparation of the Bid

Bidders shall submit their bids on the form furnished by the Awarding Authority. The bid shall be executed properly, and bids shall be made for all items indicated in the bid form, except when alternate bids are asked, a bid on more than one alternate for each item is not required, unless otherwise provided. The bidder shall indicate in figures, a unit price for each of the separate items called for in the bid form; the bidder shall show the products of the respective quantities and unit prices in the column provided for that purpose, and the gross sum shown in the place indicated in the bid form shall be the summation of said products. All writing shall be with ink or typewriter, except the signature of the bidder which shall be written in ink.

Any erasures or alterations in the unit prices and/or in the products of the respective quantities and unit prices in the bid, must be properly authenticated by the bidder by initialing in ink such erasures or alterations to avoid cause for rejection of the bid in accordance with Title 44 Illinois Administrative Code Chapter IX Section 660.180.

If the bid is made by an individual, that individual's name and business address shall be shown. If made by a firm or partnership, the name and business address of each member of the firm or partnership shall be shown. If made by a corporation, the bid shall show the names, titles, and business addresses of the president, corporate secretary and treasurer. The bid shall be signed by president or someone with authority to execute contracts and attest by the corporate secretary or someone with authority to execute or attest to the execution of contracts.

Rejection of Bids

The Awarding Authority reserves the right to reject any bids for any of the conditions listed below:

a) More than one bid for same work from an individual, firm partnership, or corporation under the same name or different names.

b) Evidence of collusion among bidders.

c) Unbalanced bids in which the bid prices for some items are, in the judgment of the Awarding Authority, out of proportion to the bid prices for other items.

d) If the bid does not contain a unit price for each pay item listed except in the case of authorized alternate pay items or lump sum pay items.

e) If the bid form is other than that furnished by the Awarding Authority; or if the form is altered or any part thereof is detached.

f) If there are omissions, erasures, alterations unauthorized additions, conditional or alternate bids, or irregularities of any kind which may tend to make the bid incomplete, indefinite or ambiguous as to its meaning.

g) If the bidder adds any provisions reserving the right to accept or reject an award, or to enter into a contract pursuant to an award.

h) If the proposal is not accompanied by the proper bid guaranty.

i) If the bid is prepared with other than ink or typewriter, or otherwise fails to meet the requirement of the above "Preparation of Proposal" section.

j) Lack of Competency and adequate machinery, plant, and other equipment, as revealed by the financial statement and experience questionnaires required in the prequalification procedures.

k) Uncompleted work which, in the judgment of the Awarding Authority, might hinder or prevent the prompt completion of additional work awarded.

l) False information provided on a bidder's "Affidavit of Availability".

m) Failure to pay, or satisfactorily settle, all bills due for labor and material on former contracts in force at the time of issuance of bid forms.

n) Failure to comply with any prequalification regulations of the Department.

o) Default under previous contracts.

p) Unsatisfactory performance record as shown by past work for the Awarding Authority, judged from the standpoint of workmanship and progress.

q) When the contractor is suspended from eligibility to bid at a public letting where the contract is awarded by, or requires approval of, the Department.

r) When any agent, servant, or employee of the prospective bidder currently serves as a member, employee, or agent of a governmental body that is financially involved in the proposal work.

s) When any agent, servant, or employee of the perspective bidder has participated in the preparation of plans or specifications for the proposed work.

Bid Guaranty

Each bid shall be accompanied by a bid bond on the Department form contained in the bid document, executed by a corporate surety company satisfactory to the Awarding Authority, by a bank cashier's check or a properly certified check for not less than five percent (5%) of the amount bid, or for the amount specified in the following schedule:

	Amount Bid	Proposal Guaranty
Up to	$5,000	$150
$5,000	$10,000	$300
$10,000	150,000	$1,000
$50,000	$100,00	$3,000
$100,000	$150,000	$5,000
$150,000	$250,000	$7,500
$250,000	$500,000	$12,500
$500,000	$1,000,000	$25,000
$1,000,000	$1,500,000	$50,000
$1,500,000	$2,000,000	$75,000
$2,000,000	$3,000,000	$100,000
$3,000,000	$5,000,000	$150,000
$5,000,000	$7,500,000	$250,000
$7,500,000	$10,000,000	$400,000
$10,000,000	$15,000,000	$500,000
$15,000,000	$20,000,000	$600,000
$20,000,000	$25,000,000	$700,000
$25,000,000	$30,000,000	$800,000
$30,000,000	$35,000,000	$900,000
Over	$35,000,000	$1,000,000

In the event that one proposal guaranty check is intended to cover two or more bids, the amount must equal to the sum of the bid guaranties, which would be required for each individual proposal.

Bank cashier's checks or properly certified checks accompanying bids shall be made payable to the County Treasurer, when a County is the Awarding Authority; or the City, Village, or Town Treasurer, when a city, village or town is the Awarding Authority.

The bid guaranty checks of all except the two (2) lowest responsible bidders will be returned promptly after the bids have been checked, tabulated, and the relation of the bids established. Bid guaranty checks of the two lowest responsible bidders will be returned as soon as the contract and contract bond of the successful bidder have been properly executed and approved. Bid bonds will not be returned.

After a period of three (3) working days has elapsed after the date of opening proposals, the Awarding Authority may permit the two lowest bidders to substitute for the banks cashier's checks or certified checks submitted with their bids as proposal guaranties, bid bonds on the Department forms executed by corporate surety companies satisfactory to the Awarding Authority.

Delivery of Bids

If a special envelope is supplied by the Awarding Authority, each bid should be submitted in that envelope furnished by the Awarding Authority and the blank spaces on the envelope shall be filled in correctly to clearly indicate its contents. When an envelope other than the special one furnished by the Awarding Authority is used, it shall be marked to clearly indicate its contents. When sent by mail, the sealed proposal shall be addressed to the Awarding Authority at the address and in care of the official in whose office the bids are to be received. All bids shall be filed prior to the time and at the place specified in the Notice to Bidders. Bids received after the time specified will be returned to the bidder unopened.

Withdrawal of Bids

Bidder may withdraw their bid prior to bid opening.

Public Opening of Bids

Bids will be opened and read publicly at the time and place specified in the Notice to Bidders. Bidders, their authorized agents, and other interested parties are invited to be present.

Consideration of Bids

After the bids are opened and read, they will be compared on the basis of the summation of the products of the quantities shown in the bid schedule by the unit bid prices. In awarding contracts, the Awarding Authority will, in addition to considering the amounts stated in the bids, take into consideration the responsibility of the various bidders as stated under "Rejection of Bids and documents submitted in the bid and from other investigations which it may elect to make.

The right is reserved to reject any or all bids, to waive technicalities, or to advertise from new bids, if in the judgment of the Awarding Authority, the best interests of the Awarding Authority will be promoted thereby.

Awarding of Contract

The award of contract will be made within 90 calendar days after the opening of bids to the lowest responsible and responsive qualified bidder whose bids complies with all the requirements prescribed. The successful bidder will be notified that their bid has been accepted, and subject to the following conditions, the bidder will be the Contractor. In addition, **the contractor shall provide all required insurance and bonding as specified within fourteen (14) calendar days from notice.**

An approved contract executed by the Awarding Authority is required before the Awarding Authority is bound. An award may be cancelled any time by the Awarding Authority prior to execution in order to protect the public interest and integrity of the bidding process or for any other reason, if the judgment of the Awarding Authority and/or the best interests of the Awarding Authority will be promoted thereby.

If a contract is not awarded within 90 days after the bid opening, bidders may file a written request with the Awarding Authority for the withdrawal of their bid, or agree to maintain their bid price.

Requirement of Contract Bond

The Contractor shall furnish the Awarding Authority a performance and payment bond with good and sufficient sureties in the full amount of the contract within **fourteen (14) calendar days** as part of the requirement. The surety shall be acceptable to the Awarding Authority, shall waive notice of any changes and extensions of time, and shall submit its bond on the form furnished by the Awarding Authority.

Failure to Execute Contract

If the contract is not executed by the Awarding Authority within 90 days from the bid opening, the bidder shall have the right to withdraw their bid without penalty.

Failure of the successful bidder to provide all required insurance and bonding within **fourteen (14) days after the award notification** shall be just cause for the cancellation of the award and the forfeiture of the bid guaranty which shall become the property of the Awarding Authority, not as penalty, but in liquidation of damages sustained. Award may then be made to the next lowest responsible bidder, or the work may be advertised again and constructed under contract, or otherwise, as the Awarding Authority may decide.

SPECIAL PROVISION
FOR
PRE-BID MEETING

Prospective bidders are advised that Pre-Bid Meeting will be held:

Date: **Thursday, July 30, 2015**

Time: 11:00 A.M.

Place: Cook County Department of Transportation and Highways
69 W. Washington Street
Suite 2260
Chicago, IL 60602

SPECIAL PROVISION
FOR
WAGES OF EMPLOYEES ON PUBLIC WORKS

1. **Prevailing Wages.** All wages paid by the contractor and each subcontractor shall be in compliance with The Prevailing Wage Act (820 ILCS 130), as amended, except where a prevailing wage violates a federal law, order, or ruling, the rate conforming to the federal law, order, or ruling shall govern. The Illinois Department of Labor publishes the prevailing wage rates on its website at www.state.il.us/agency/idol/rates.rates.htm. If the Illinois Department of Labor revises the prevailing wage rates, the revised prevailing wage rates on the Illinois Department of Labor's website shall apply to this contract and the contractor will not be allowed additional compensation on account of said revisions. The contractor shall review the wage rates applicable to the work of the contract at regular intervals in order to ensure the timely payment of current wage rates. The contractor agrees that no additional notice is required. The contractor shall be responsible to notify each subcontractor of the wage rate set forth in this contract and any revisions thereto.

2. **Payroll Records.** The contractor and each subcontractor shall make and keep, for a period of not less than five years from the date of the last payment on a contract or subcontract, records of all laborers, mechanics, and other workers employed by them on the project; the records shall include information required by 820 ILCS 13/5 for each worker. Upon seven (7) business days' notice, the contractor and each subcontractor shall make available for inspection and copying at a location within this State during reasonable hours, the payroll records to the public body in charge of the project, its officers and agents, the Director of Labor and his deputies and agents, and to federal, State, or local law enforcement agencies and prosecutors.

3. **Submission of Payroll Records.** The contractor and each subcontractor shall, no later than the 15th day of each calendar month, file a certified payroll for the immediately preceding month with public body in charge of the project, except that the full social security number and home address shall not be included on weekly transmittals. Instead the payrolls shall include an identification number for each employee (E.g., the last four digits of the employee's social security). The certified payroll shall consist of a complete copy of the payroll records except starting and ending times of work each day may be omitted.

   The certified payroll shall be accompanied by a statement signed by the contractor or subcontractor or an officer, employee, or agent of the contractor or subcontractor which avers that: (i) he or she has examined the certified payroll records required to be submitted by the Act and such records are true and accurate; (ii) the hourly rate paid to each worker is not less than the general prevailing rate of hourly wages required: and (iii) the contractor or subcontractor is aware that filing a certified payroll that he or she knows to be false is a Class A misdemeanor.

   All certified payroll records required to be submitted pertaining to Cook County Department of Transportation and Highway contracts should be submitted to the following address:

   Chief Engineer – Construction Bureau
   Cook County Department of Transportation and Highways
   69 West Washington Street – 23rd Floor
   Chicago, IL 60602

4. **Employees Interviews.** The contractor and each subcontractor shall permit his/her employees to be interviewed on the job, during working hours, by compliance investigators of the Department of Labor.

Cook County Prevailing Wage for July 2015

(See explanation of column headings at bottom of wages)

Trade Name	RG	TYP	C	Base	FRMAN	M-F>8	OSA	OSH	H/W	Pensn	Vac	Trng
ASBESTOS ABT-GEN		ALL		39.400	39.950	1.5	1.5	2.0	13.98	11.28	0.000	0.500
ASBESTOS ABT-MEC		BLD		36.340	38.840	1.5	1.5	2.0	11.47	10.96	0.000	0.720
BOILERMAKER		BLD		47.070	51.300	2.0	2.0	2.0	6.970	18.13	0.000	0.400
BRICK MASON		BLD		43.780	48.160	1.5	1.5	2.0	10.05	14.43	0.000	1.030
CARPENTER		ALL		44.350	46.350	1.5	1.5	2.0	11.79	16.39	0.000	0.630
CEMENT MASON		ALL		43.750	45.750	2.0	1.5	2.0	13.05	14.45	0.000	0.480
CERAMIC TILE FNSHER		BLD		36.810	0.000	1.5	1.5	2.0	10.55	9.230	0.000	0.770
COMM. ELECT.		BLD		40.000	42.800	1.5	1.5	2.0	8.670	12.57	1.100	0.750
ELECTRIC PWR EQMT OP		ALL		46.100	51.100	1.5	1.5	2.0	10.76	14.87	0.000	0.460
ELECTRIC PWR GRNDMAN		ALL		37.050	52.500	1.5	2.0	2.0	8.630	12.28	0.000	0.370
ELECTRIC PWR LINEMAN		ALL		47.500	52.500	1.5	2.0	1.5	11.06	15.75	0.000	0.480
ELECTRICIAN		ALL		45.000	48.000	1.5	1.5	2.0	13.83	15.27	0.000	1.000
ELEVATOR CONSTRUCTOR		BLD		50.800	57.150	2.0	2.0	2.0	13.57	14.21	4.060	0.600
FENCE ERECTOR		ALL		37.340	39.340	1.5	1.5	2.0	13.05	12.06	0.000	0.300
GLAZIER		BLD		40.500	42.000	1.5	2.0	2.0	13.14	16.99	0.000	0.940
HT/FROST INSULATOR		BLD		48.450	50.950	1.5	1.5	2.0	11.47	12.16	0.000	0.720
IRON WORKER		ALL		44.200	46.200	2.0	2.0	2.0	13.65	21.14	0.000	0.350
LABORER		ALL		39.200	39.950	1.5	1.5	2.0	13.98	10.72	0.000	0.500
LATHER		ALL		44.350	46.350	1.5	1.5	2.0	13.29	16.39	0.000	0.630
MACHINIST		BLD		45.350	47.850	1.5	1.5	2.0	7.260	8.950	1.850	0.000
MARBLE FINISHERS		ALL		32.400	34.320	1.5	1.5	2.0	10.05	13.75	0.000	0.620
MARBLE MASON		BLD		43.030	47.330	1.5	1.5	2.0	10.05	14.10	0.000	0.780
MATERIAL TESTER I		ALL		29.200	0.000	1.5	1.5	2.0	13.98	10.72	0.000	0.500
MATERIALS TESTER II		ALL		34.200	0.000	1.5	1.5	2.0	13.98	10.72	0.000	0.000
MILLWRIGHT		ALL		44.350	46.350	1.5	1.5	2.0	13.29	16.39	0.000	0.630
OPERATING ENGINEER		BLD	1	48.100	52.100	2.0	2.0	2.0	17.55	12.65	1.900	1.250
OPERATING ENGINEER		BLD	2	46.800	52.100	2.0	2.0	2.0	17.55	12.65	1.900	1.250
OPERATING ENGINEER		BLD	3	44.250	52.100	2.0	2.0	2.0	17.55	12.65	1.900	1.250
OPERATING ENGINEER		BLD	4	42.500	52.100	2.0	2.0	2.0	17.55	12.65	1.900	1.250
OPERATING ENGINEER		BLD	5	51.850	52.100	2.0	2.0	2.0	17.55	12.65	1.900	1.250
OPERATING ENGINEER		BLD	6	49.100	52.100	2.0	2.0	2.0	17.55	12.65	1.900	1.250
OPERATING ENGINEER		BLD	7	51.100	52.100	2.0	2.0	2.0	17.55	12.65	1.900	1.250
OPERATING ENGINEER		FLT	1	53.600	53.600	1.5	1.5	2.0	17.10	11.80	1.900	1.250
OPERATING ENGINEER		FLT	2	52.100	53.600	1.5	1.5	2.0	17.10	11.05	1.900	1.250

OPERATING ENGINEER		FLT	3	46.400	53.600	1.5	1.5	2.0	17.10	11.80	1.900	1.250
OPERATING ENGINEER		FLT	4	38.550	53.600	1.5	1.5	2.0	17.10	11.80	1.900	1.250
OPERATING ENGINEER		FLT	5	55.100	53.600	1.5	1.5	2.0	17.10	11.80	1.900	1.250
OPERATING ENGINEER		FLT	6	35.000	35.000	1.5	1.5	2.0	16.60	11.05	1.900	1.250
OPERATING ENGINEER		HWY	1	46.300	50.300	1.5	1.5	2.0	17.55	12.65	1.900	1.250
OPERATING ENGINEER		HWY	2	45.750	50.300	1.5	1.5	2.0	17.55	12.65	1.900	1.250
OPERATING ENGINEER		HWY	3	43.700	50.300	1.5	1.5	2.0	17.55	12.65	1.900	1.250
OPERATING ENGINEER		HWY	4	42.300	50.300	1.5	1.5	2.0	17.55	12.65	1.900	1.250
OPERATING ENGINEER		HWY	5	41.100	50.300	1.5	1.5	2.0	17.55	12.65	1.900	1.250
OPERATING ENGINEER		HWY	6	49.300	50.300	1.5	1.5	2.0	17.55	12.65	1.900	1.250
OPERATING ENGINEER		HWY	7	47.300	50.300	1.5	1.5	2.0	17.55	12.65	1.900	1.250
ORNAMNTL IRON WORKER		ALL		45.000	47.500	0.0	0.0	0.0	0.000	0.000	0.000	0.650
PAINTER		ALL		41.750	46.500	1.5	1.5	1.5	11.50	11.10	0.000	0.770
PAINTER SIGNS		BLD		33.920	38.090	1.5	1.5	1.5	2.600	2.710	0.000	0.000
PILEDRIVER		ALL		44.350	46.350	1.5	1.5	2.0	13.29	16.39	0.000	0.630
PIPEFITTER		BLD		46.000	49.000	1.5	1.5	2.0	9.000	15.85	0.000	1.780
PLASTERER		BLD		43.430	46.040	1.5	1.5	2.0	13.05	14.43	0.000	1.020
PLUMBER		BLD		46.650	48.650	1.5	1.5	2.0	13.18	11.46	0.000	0.880
ROOFER		BLD		41.000	44.000	1.5	1.5	2.0	8.280	10.54	0.000	0.530
SHEETMETAL WORKER		BLD		42.230	45.610	1.5	1.5	2.0	10.53	20.68	0.000	0.720
SIGN HANGER		BLD		31.310	33.810	1.5	1.5	2.0	4.850	3.280	0.000	0.000
SPRINKLER FITTER		BLD		49.200	51.200	1.5	1.5	2.0	11.75	9.650	0.000	0.550
STEEL ERECTOR		ALL		42.070	44.070	2.0	2.0	2.0	13.45	19.59	0.000	0.350
STONE MASON		BLD		43.780	48.160	1.5	1.5	2.0	10.05	14.43	0.000	1.030
SURVEY WORKER		ALL		37.000	37.750	1.5	1.5	2.0	12.97	9.930	0.000	0.500
TERRAZZO FINISHER		BLD		38.040	0.000	1.5	1.5	2.0	10.55	11.22	0.000	0.720
TERRAZZO MASON		BLD		41.880	44.880	1.5	1.5	2.0	10.55	12.51	0.000	0.940
TILE MASON		BLD		43.840	47.840	1.5	1.5	2.0	10.55	11.40	0.000	0.990
TRAFFIC SAFETY WRKR		HWY		32.750	34.350	1.5	1.5	2.0	6.550	6.450	0.000	0.500
TRUCK DRIVER	E	ALL	1	35.480	35.680	1.5	1.5	2.0	8.350	10.50	0.000	0.150
TRUCK DRIVER	E	ALL	2	34.100	34.500	1.5	1.5	2.0	8.150	8.500	0.000	0.150
TRUCK DRIVER	E	ALL	3	34.300	34.500	1.5	1.5	2.0	8.150	8.500	0.000	0.150
TRUCK DRIVER	E	ALL	4	34.500	34.500	1.5	1.5	2.0	8.150	8.500	0.000	0.150
TRUCK DRIVER	W	ALL	1	35.600	35.800	1.5	1.5	1.5	8.250	9.140	0.000	0.150
TRUCK DRIVER	W	ALL	2	32.700	33.100	1.5	1.5	2.0	6.500	4.350	0.000	0.000
TRUCK DRIVER	W	ALL	3	32.900	33.100	1.5	1.5	2.0	6.500	4.350	0.000	0.000
TRUCK DRIVER	W	ALL	4	33.100	33.100	1.5	1.5	2.0	6.500	4.350	0.000	0.000
TUCKPOINTER		BLD		43.800	44.800	1.5	1.5	2.0	8.280	13.49	0.000	0.670

Legend: RG (Region)
TYP (Trade Type - All,Highway,Building,Floating,Oil & Chip,Rivers)
C (Class)
Base (Base Wage Rate)
FRMAN (Foreman Rate)

M-F>8 (OT required for any hour greater than 8 worked each day, Mon through Fri.
OSA (Overtime (OT) is required for every hour worked on Saturday)
OSH (Overtime is required for every hour worked on Sunday and Holidays)
H/W (Health & Welfare Insurance)
Pensn (Pension)
Vac (Vacation)
Trng (Training)

Explanations

COOK COUNTY

The following list is considered as those days for which holiday rates of wages for work performed apply: New Years Day, Memorial Day, Fourth of July, Labor Day, Thanksgiving Day, Christmas Day and Veterans Day in some classifications/counties. Generally, any of these holidays which fall on a Sunday is celebrated on the following Monday. This then makes work performed on that Monday payable at the appropriate overtime rate for holiday pay. Common practice in a given local may alter certain days of celebration. If in doubt, please check with IDOL.

TRUCK DRIVERS (WEST) - That part of the county West of Barrington Road.

EXPLANATION OF CLASSES

ASBESTOS - GENERAL - removal of asbestos material/mold and hazardous materials from any place in a building, including mechanical systems where those mechanical systems are to be removed. This includes the removal of asbestos materials/mold and hazardous materials from ductwork or pipes in a building when the building is to be demolished at the time or at some close future date.
ASBESTOS - MECHANICAL - removal of asbestos material from mechanical systems, such as pipes, ducts, and boilers, where the mechanical systems are to remain.

CERAMIC TILE FINISHER

The grouting, cleaning, and polishing of all classes of tile, whether for interior or exterior purposes, all burned, glazed or unglazed products; all composition materials, granite tiles, warning detectable tiles, cement tiles, epoxy composite materials, pavers, glass, mosaics, fiberglass, and all substitute materials, for tile made in tile-like units; all mixtures in tile like form of cement, metals, and other materials that are for and intended for use as a finished floor surface, stair treads, promenade roofs, walks, walls, ceilings, swimming pools, and all other places where tile is to form a finished interior or exterior. The mixing of all setting mortars including but not limited to thin-set mortars, epoxies, wall mud, and any other sand and cement mixtures or adhesives when used in the preparation, installation, repair, or maintenance of tile and/or similar materials. The handling and unloading of all sand, cement, lime, tile, fixtures, equipment, adhesives, or any other materials to be used in the preparation, installation, repair, or maintenance of tile and/or similar materials. Ceramic Tile Finishers shall fill all joints and voids regardless of method on all tile work, particularly and especially after installation of said tile work. Application of any and all protective coverings to all types of tile installations including, but not be limited to, all soap compounds, paper products, tapes, and all polyethylene coverings, plywood, masonite, cardboard, and any new type of products that may be used to protect tile installations, Blastrac equipment, and all floor scarifying equipment used in preparing floors to receive tile. The clean up and removal of all waste and materials. All demolition of existing tile floors and walls to be re-tiled.

COMMUNICATIONS ELECTRICIAN

Installation, operation, inspection, maintenance, repair and service of radio, television, recording, voice sound vision production and reproduction, telephone and telephone interconnect, facsimile, data apparatus, coaxial, fibre optic and wireless equipment, appliances and systems used for the transmission and reception of signals of any nature, business, domestic, commercial, education, entertainment, and residential purposes, including but not limited to, communication and telephone, electronic and sound equipment, fibre optic and data

communication systems, and the performance of any task directly related to such installation or service whether at new or existing sites, such tasks to include the placing of wire and cable and electrical power conduit or other raceway work within the equipment room and pulling wire and/or cable through conduit and the installation of any incidental conduit, such that the employees covered hereby can complete any job in full.

MARBLE FINISHER

Loading and unloading trucks, distribution of all materials (all stone, sand, etc.), stocking of floors with material, performing all rigging for heavy work, the handling of all material that may be needed for the installation of such materials, building of scaffolding, polishing if needed, patching, waxing of material if damaged, pointing up, caulking, grouting and cleaning of marble, holding water on diamond or Carborundum blade or saw for setters cutting, use of tub saw or any other saw needed for preparation of material, drilling of holes for wires that anchor material set by setters, mixing up of molding plaster for installation of material, mixing up thin set for the installation of material, mixing up of sand to cement for the installation of material and such other work as may be required in helping a Marble Setter in the handling of all material in the erection or installation of interior marble, slate, travertine, art marble, serpentine, alberene stone, blue stone, granite and other stones (meaning as to stone any foreign or domestic materials as are specified and used in building interiors and exteriors and customarily known as stone in the trade), carrara, sanionyx, vitrolite and similar opaque glass and the laying of all marble tile, terrazzo tile, slate tile and precast tile, steps, risers treads, base, or any other materials that may be used as substitutes for any of the aforementioned materials and which are used on interior and exterior which are installed in a similar manner.

MATERIAL TESTER I: Hand coring and drilling for testing of materials; field inspection of uncured concrete and asphalt.

MATERIAL TESTER II: Field inspection of welds, structural steel, fireproofing, masonry, soil, facade, reinforcing steel, formwork, cured concrete, and concrete and asphalt batch plants; adjusting proportions of bituminous mixtures.

OPERATING ENGINEER - BUILDING

Class 1. Asphalt Plant; Asphalt Spreader; Autograde; Backhoes with Caisson Attachment; Batch Plant; Benoto (requires Two Engineers); Boiler and Throttle Valve; Caisson Rigs; Central Redi-Mix Plant; Combination Back Hoe Front End-loader Machine; Compressor and Throttle Valve; Concrete Breaker (Truck Mounted); Concrete Conveyor; Concrete Conveyor (Truck Mounted); Concrete Paver Over 27E cu. ft; Concrete Paver 27E cu. ft. and Under: Concrete Placer; Concrete Placing Boom; Concrete Pump (Truck Mounted); Concrete Tower; Cranes, All; Cranes, Hammerhead; Cranes, (GCI and similar Type); Creter Crane; Spider Crane; Crusher, Stone, etc.; Derricks, All; Derricks, Traveling; Formless Curb and Gutter Machine; Grader, Elevating; Grouting Machines; Heavy Duty Self-Propelled Transporter or Prime Mover; Highlift Shovels or Front Endloader 2-1/4 yd. and over; Hoists, Elevators, outside type rack and pinion and similar machines; Hoists, One, Two and Three Drum; Hoists, Two Tugger One Floor; Hydraulic Backhoes; Hydraulic Boom Trucks; Hydro Vac (and similar equipment); Locomotives, All; Motor Patrol; Lubrication Technician; Manipulators; Pile Drivers and Skid Rig; Post Hole Digger; Pre-Stress Machine; Pump Cretes Dual Ram; Pump Cretes: Squeeze Cretes-Screw Type Pumps; Gypsum Bulker and Pump; Raised and Blind Hole Drill; Roto Mill Grinder; Scoops - Tractor Drawn; Slip-Form Paver; Straddle Buggies; Operation of Tie Back Machine; Tournapull; Tractor with Boom and Side Boom; Trenching Machines.

Class 2. Boilers; Broom, All Power Propelled; Bulldozers; Concrete Mixer (Two Bag and Over); Conveyor, Portable; Forklift Trucks; Highlift Shovels or Front Endloaders under 2-1/4 yd.; Hoists, Automatic; Hoists, Inside Elevators; Hoists, Sewer Dragging Machine; Hoists, Tugger Single Drum; Laser Screed; Rock Drill (Self-Propelled); Rock Drill (Truck Mounted); Rollers, All; Steam Generators; Tractors, All; Tractor Drawn Vibratory Roller; Winch Trucks with "A" Frame.

Class 3. Air Compressor; Combination Small Equipment Operator; Generators; Heaters, Mechanical; Hoists, Inside Elevators (remodeling or renovation work); Hydraulic Power Units (Pile Driving, Extracting, and Drilling); Pumps, over 3" (1 to 3 not to exceed a total of 300

ft.); Low Boys; Pumps, Well Points; Welding Machines (2 through 5); Winches, 4 Small Electric Drill Winches.

Class 4. Bobcats and/or other Skid Steer Loaders; Oilers; and Brick Forklift.

Class 5. Assistant Craft Foreman.

Class 6. Gradall.

Class 7. Mechanics; Welders.

OPERATING ENGINEERS - HIGHWAY CONSTRUCTION

Class 1. Asphalt Plant; Asphalt Heater and Planer Combination; Asphalt Heater Scarfire; Asphalt Spreader; Autograder/GOMACO or other similar type machines: ABG Paver; Backhoes with Caisson Attachment; Ballast Regulator; Belt Loader; Caisson Rigs; Car Dumper; Central Redi-Mix Plant; Combination Backhoe Front Endloader Machine, (1 cu. yd. Backhoe Bucket or over or with attachments); Concrete Breaker (Truck Mounted); Concrete Conveyor; Concrete Paver over 27E cu. ft.; Concrete Placer; Concrete Tube Float; Cranes, all attachments; Cranes, Tower Cranes of all types: Creter Crane: Spider Crane; Crusher, Stone, etc.; Derricks, All; Derrick Boats; Derricks, Traveling; Dredges; Elevators, Outside type Rack & Pinion and Similar Machines; Formless Curb and Gutter Machine; Grader, Elevating; Grader, Motor Grader, Motor Patrol, Auto Patrol, Form Grader, Pull Grader, Subgrader; Guard Rail Post Driver Truck Mounted; Hoists, One, Two and Three Drum; Heavy Duty Self-Propelled Transporter or Prime Mover; Hydraulic Backhoes; Backhoes with shear attachments up to 40' of boom reach; Lubrication Technician; Manipulators; Mucking Machine; Pile Drivers and Skid Rig; Pre-Stress Machine; Pump Cretes Dual Ram; Rock Drill - Crawler or Skid Rig; Rock Drill - Truck Mounted; Rock/Track Tamper; Roto Mill Grinder; Slip-Form Paver; Snow Melters; Soil Test Drill Rig (Truck Mounted); Straddle Buggies; Hydraulic Telescoping Form (Tunnel); Operation of Tieback Machine; Tractor Drawn Belt Loader; Tractor Drawn Belt Loader (with attached pusher - two engineers); Tractor with Boom; Tractaire with Attachments; Traffic Barrier Transfer Machine; Trenching; Truck Mounted Concrete Pump with Boom; Raised or Blind Hole Drills (Tunnel Shaft); Underground Boring and/or Mining Machines 5 ft. in diameter and over tunnel, etc; Underground Boring and/or Mining Machines under 5 ft. in diameter; Wheel Excavator; Widener (APSCO).

Class 2. Batch Plant; Bituminous Mixer; Boiler and Throttle Valve; Bulldozers; Car Loader Trailing Conveyors; Combination Backhoe Front Endloader Machine (Less than 1 cu. yd. Backhoe Bucket or over or with attachments); Compressor and Throttle Valve; Compressor, Common Receiver (3); Concrete Breaker or Hydro Hammer; Concrete Grinding Machine; Concrete Mixer or Paver 7S Series to and including 27 cu. ft.; Concrete Spreader; Concrete Curing Machine, Burlap Machine, Belting Machine and Sealing Machine; Concrete Wheel Saw; Conveyor Muck Cars (Haglund or Similar Type); Drills, All; Finishing Machine - Concrete; Highlift Shovels or Front Endloader; Hoist - Sewer Dragging Machine; Hydraulic Boom Trucks (All Attachments); Hydro-Blaster; Hydro Excavating (excluding hose work); Laser Screed; All Locomotives, Dinky; Off-Road Hauling Units (including articulating) Non Self-Loading Ejection Dump; Pump Cretes: Squeeze Cretes - Screw Type Pumps, Gypsum Bulker and Pump; Roller, Asphalt; Rotary Snow Plows; Rototiller, Seaman, etc., self-propelled; Self-Propelled Compactor; Spreader - Chip - Stone, etc.; Scraper - Single/Twin Engine/Push and Pull; Scraper - Prime Mover in Tandem (Regardless of Size); Tractors pulling attachments, Sheeps Foot, Disc, Compactor, etc.; Tug Boats.

Class 3. Boilers; Brooms, All Power Propelled; Cement Supply Tender; Compressor, Common Receiver (2); Concrete Mixer (Two Bag and Over); Conveyor, Portable; Farm-Type Tractors Used for Mowing, Seeding, etc.; Forklift Trucks; Grouting Machine; Hoists, Automatic; Hoists, All Elevators; Hoists, Tugger Single Drum; Jeep Diggers; Low Boys; Pipe Jacking Machines; Post-Hole Digger; Power Saw, Concrete Power Driven; Pug Mills; Rollers, other than Asphalt; Seed and Straw Blower; Steam Generators; Stump Machine; Winch Trucks with "A" Frame; Work Boats; Tamper-Form-Motor Driven.

Class 4. Air Compressor; Combination - Small Equipment Operator; Directional Boring Machine; Generators; Heaters, Mechanical; Hydraulic Power Unit (Pile Driving, Extracting, or Drilling); Light Plants, All (1 through 5); Pumps, over 3" (1 to 3 not to exceed a total of 300 ft.); Pumps, Well Points; Vacuum Trucks (excluding hose work); Welding Machines (2 through 5); Winches, 4 Small Electric Drill Winches.

Class 5. SkidSteer Loader (all); Brick Forklifts; Oilers.

Class 6. Field Mechanics and Field Welders

Class 7. Dowell Machine with Air Compressor; Gradall and machines of like nature.

OPERATING ENGINEER - FLOATING

Class 1. Craft Foreman; Master Mechanic; Diver/Wet Tender; Engineer; Engineer (Hydraulic Dredge).

Class 2. Crane/Backhoe Operator; Boat Operator with towing endorsement; Mechanic/Welder; Assistant Engineer (Hydraulic Dredge); Leverman (Hydraulic Dredge); Diver Tender.

Class 3. Deck Equipment Operator, Machineryman, Maintenance of Crane (over 50 ton capacity) or Backhoe (115,000 lbs. or more); Tug/Launch Operator; Loader/Dozer and like equipment on Barge, Breakwater Wall, Slip/Dock, or Scow, Deck Machinery, etc.

Class 4. Deck Equipment Operator, Machineryman/Fireman (4 Equipment Units or More); Off Road Trucks; Deck Hand, Tug Engineer, Crane Maintenance (50 Ton Capacity and Under) or Backhoe Weighing (115,000 pounds or less); Assistant Tug Operator.

Class 5. Friction or Lattice Boom Cranes.

Class 6. ROV Pilot, ROV Tender

SURVEY WORKER - Operated survey equipment including data collectors, G.P.S. and robotic instruments, as well as conventional levels and transits.

TERRAZZO FINISHER

The handling of sand, cement, marble chips, and all other materials that may be used by the Mosaic Terrazzo Mechanic, and the mixing, grinding, grouting, cleaning and sealing of all Marble, Mosaic, and Terrazzo work, floors, base, stairs, and wainscoting by hand or machine, and in addition, assisting and aiding Marble, Masonic, and Terrazzo Mechanics.

TRAFFIC SAFETY

Work associated with barricades, horses and drums used to reduce lane usage on highway work, the installation and removal of temporary lane markings, and the installation and removal of temporary road signs.

TRUCK DRIVER - BUILDING, HEAVY AND HIGHWAY CONSTRUCTION - EAST & WEST

Class 1. Two or three Axle Trucks. A-frame Truck when used for transportation purposes; Air Compressors and Welding Machines, including those pulled by cars, pick-up trucks and tractors; Ambulances; Batch Gate Lockers; Batch Hopperman; Car and Truck Washers; Carry-alls; Fork Lifts and Hoisters; Helpers; Mechanics Helpers and Greasers; Oil Distributors 2-man operation; Pavement Breakers; Pole Trailer, up to 40 feet; Power Mower Tractors; Self-propelled Chip Spreader; Skipman; Slurry Trucks, 2-man operation; Slurry Truck Conveyor Operation, 2 or 3 man; Teamsters; Unskilled Dumpman; and Truck Drivers hauling warning lights, barricades, and portable toilets on the job site.

Class 2. Four axle trucks; Dump Crets and Adgetors under 7 yards; Dumpsters, Track Trucks, Euclids, Hug Bottom Dump Turnapulls or Turnatrailers when pulling other than self-loading equipment or similar equipment under 16 cubic yards; Mixer Trucks under 7 yards; Ready-mix Plant Hopper Operator, and Winch Trucks, 2 Axles.

Class 3. Five axle trucks; Dump Crets and Adgetors 7 yards and over; Dumpsters, Track Trucks, Euclids, Hug Bottom Dump Turnatrailers or turnapulls when pulling other than self-loading equipment or similar equipment over 16 cubic yards; Explosives and/or Fission Material Trucks; Mixer Trucks 7 yards or over; Mobile Cranes while in transit; Oil Distributors, 1-man operation; Pole Trailer, over 40 feet; Pole and Expandable Trailers hauling material over 50 feet long; Slurry trucks, 1-man operation; Winch trucks, 3 axles or more; Mechanic--Truck Welder and Truck Painter.

Class 4. Six axle trucks; Dual-purpose vehicles, such as mounted crane trucks with hoist and accessories; Foreman; Master Mechanic;

Self-loading equipment like P.B. and trucks with scoops on the front.

Other Classifications of Work:

For definitions of classifications not otherwise set out, the Department generally has on file such definitions which are available. If a task to be performed is not subject to one of the classifications of pay set out, the Department will upon being contacted state which neighboring county has such a classification and provide such rate, such rate being deemed to exist by reference in this document. If no neighboring county rate applies to the task, the Department shall undertake a special determination, such special determination being then deemed to have existed under this determination. If a project requires these, or any classification not listed, please contact IDOL at 217-782-1710 for wage rates or clarifications.

LANDSCAPING

Landscaping work falls under the existing classifications for laborer, operating engineer and truck driver. The work performed by landscape plantsman and landscape laborer is covered by the existing classification of laborer. The work performed by landscape operators (regardless of equipment used or its size) is covered by the classifications of operating engineer. The work performed by landscape truck drivers (regardless of size of truck driven) is covered by the classifications of truck driver.

MATERIAL TESTER & MATERIAL TESTER/INSPECTOR I AND II

Notwithstanding the difference in the classification title, the classification entitled "Material Tester I" involves the same job duties as the classification entitled "Material Tester/Inspector I". Likewise, the classification entitled "Material Tester II" involves the same job duties as the classification entitled "Material Tester/Inspector II".

SPECIAL PROVISION
FOR
ALTERNATE PROPOSAL

The Bidder certified that this bid and the unit prices shown on the schedule of prices are based on performing the work in accordance with "An Act Regulating the Wages of Laborers, Mechanics and other Workers employed under contracts for Public Works" enacted by the 62nd General Assembly and approved June 26, 1941, as amended. Should said "Act" be declared inoperative, void or unconstitutional at any time, either before or after the awarding of the contract for this project, the bidder agrees to perform the work at a reduction of _____ per cent, of the unit prices shown on the schedule of prices, it being expressly understood and agreed that the within bid shall be and remain in full force and effect, regardless of whether the said "Act" is declared to be inoperative, void or unconstitutional. The contract for this project is to be awarded on the bases of the unit prices shown on the schedule of prices, and the percentage reduction, if any, act out in this alternative proposal, is to receive no consideration in the award of this contract.

Should the said "Act" be declared inoperative, void or unconstitutional at any time after the awarding of said contract, whether before, during or after the completion of the work, the said contract shall remain in full force and effect, and shall be subject only to said reduction, if any, in the unit prices shown on the schedule of prices.

NOTE: The Bidder shall insert in the first paragraph the percentage which he will reduce his unit prices, if any, in the event the Act is declared inoperable, void or unconstitutional.

ORDINANCE

****

BE IT ENACTED BY THE BOARD OF COMMISSIONERS OF THE COUNTY OF COOK, that the Chief Procurement Officer of Cook County shall specify in the call for bids in any contract for public works that such contractors bidding on public works contracts of the County of Cook shall conform to Illinois Compiled Statutes, Chapter 30, Section 560/1 and following, which Act is entitled "An Act" to give preference in the construction of public works projects and improvements to citizens of the United States who have resided in Illinois for one year". The Chief Procurement Officer of Cook County in awarding the contract shall cause to be inserted in the contract a stipulation to the effect that the contractor shall conform to the above cited Illinois Statute.

SPECIAL PROVISION
FOR
RESPONSIBLE BIDDER REQUIREMENT

In accordance with the provisions of Section 30-22 (6) of the Illinois Procurement Code, the bidder certifies that it is a participant, either as an individual or as part of a group program, in the approved apprenticeship and training programs applicable to each type of work or craft that the bidder will perform with its own forces. The bidder further certifies for work that will be performed by subcontract that each of its subcontractors submitted for approved either (a) is, at the time of such bid, participating in an approved, applicable apprenticeship and training program; or (b) will, prior to commencement of performance of work pursuant to this centered, begin participation in an approved apprenticeship and training program applicable to the work of the subcontract. The Department, at any time before or after award, may require the production of a copy of each applicable Certificate of Registration issued by the United States Department of Labor evidencing such participation by the contractor and any or all of its Subcontractors. Applicable apprenticeship and training programs are those that have been approved and registered with the United Slates Department of Labor. The bidder shall list in the space below, the official name of the program sponsor holding the Certificate of Registration for all of the types of work or crafts in which the bidder is a participant and that will be performed with the bidder's forces. Types of work or craft work that will be subcontracted shall be included and listed as subcontract work. The list shall also indicate any type of work or craft job category that does not have an applicable apprenticeship or training program. The bidder is responsible for making a complete report and shall make certain that each type of work or craft job category that will be utilized on the project is accounted for and listed.

_____

_____

_____

_____

_____

_____

_____

_____

_____

The requirements of this certification and disclosure are a material part of the contract, and the contractor shall require this certification provision to be included in all approved subcontracts. In order to fulfill this requirement, it shall not be necessary that an applicable program sponsor be currently taking or that it will take applications for apprenticeship, training or employment during the performance of the work of this contract.

MINORITY AND WOMEN BUSINESS ENTERPRISES
COOK COUNTY ORDINANCE CHAPTER 34, DIVISION 8, SECTION 34-260 to SECTION 34-300

I. POLICY AND GOALS

A. It is the policy of the County of Cook to prevent discrimination in the award of or participation in County contracts and to eliminate arbitrary barriers for participation, as both prime and sub-contractors, in such contracts by local businesses certified as Minority Business Enterprises (MBE) and Women owned Business Enterprises (WBE). In furtherance of this policy, the Cook County Board of Commissioners has adopted a Minority and Women owned Business Enterprise Ordinance (the "Ordinance") which establishes goals as outlined below:

Contract Type	Goals	
	MBE	WBE
Goods and Services	25%	10%
Construction	24%	10%
Professional Services	35% Overall	

B. **The County may set contract specific goals for each contract, based on the commodities or services specified in this bid document. The MBE/WBE percentages required for this contract are 21.5% MBE and 5.5% WBE**. A Bid or Quotation shall be rejected if the County determines that a Bid or Quotation fails to comply with this provision, including but not limited to, commitments to achieve for this contract, the MBE/ WBE goals of the contract amount or to include a Petition for Reduction/Waiver documenting why the goals are not attainable despite the contractor's Good Faith Efforts. A Bid or Quotation may be rejected and a new Bid or Quotation may be solicited if the public interest is served thereby. Unless otherwise specified in the Bid or Quotation Documents, for purposes of this provision, the contract amount is the amount that has been entered on the Proposal page of the Bid or Quotation Documents.

C. Except to the extent that a Bid or Quotation includes a Reduction/Waiver request, the contract MBE and WBE participation goals may be achieved by the Bid or Quotation entities' status as a MBE or WBE; by entering into a joint venture with one or more MBEs and/or WBEs; by subcontracting a portion of the work to one or more MBEs and WBEs; by establishing and carrying out a mentor/protégé agreement; by the Indirect Participation of one or more MBEs and WBEs used by the entity submitting a Bid or Quotation in other aspects of its business; or by any combination of the foregoing so long as the Utilization Plan evidences a commitment to the MBE and WBE contract goals set forth in (B) above.

D. The same Business Enterprise, whether as a contractor, subcontractor or supplier, cannot be utilized as both a MBE and a WBE on the same contract.

E. To the extent that the Ordinance does not apply to this Bid or Quotation, unless specifically waived in the Bid or Quotation Documents, this provision and the wording of the Ordinance shall apply. If there is a conflict between this provision and the Ordinance or the wording of the Ordinance, the Ordinance or its wording controls.

F. A Contractor's failure to carry out its commitments in the course of the Contract's performance shall constitute a material breach of the Contract and if such breach is not appropriately cured, may result in the termination of the Contract or such remedy authorized by the Ordinance as the County deems appropriate.

MINORITY AND WOMEN BUSINESS ENTERPRISES
COOK COUNTY ORDINANCE CHAPTER 34, DIVISION 8, SECTION 34-260 to SECTION 34-300

II. REQUIRED BID OR QUOTATION SUBMITTALS

To be considered responsive, a Bid or Quotation shall meet the MBE and WBE goals by submitting a Utilization Plan with the Bid or Quotation, which shall be (1) supported by Letters of Intent from the MBEs and WBEs together with the MBEs/WBEs **current** Letters of Certification, and/or (2) include a written Petition for Reduction/Waiver with the Bid or Quotation supported by documentation of Good Faith Efforts to meet the goals. Failure to submit the documents set forth in (A) and (B) of this Section II in accordance with these guidelines will cause the Bid or Quotation to be considered non-responsive and shall be cause to reject the Bid or Quotation.

A. MBE/WBE Utilization Plan

Each Bid or Quotation shall include with the Bid or Quotation a complete Utilization Plan. The Utilization Plan shall list the names, mail and email addresses, telephone number and contact persons of businesses intended to be used as MBEs and WBEs on the Contract. If the entity submitting a Bid or Quotation, or any of its subcontractors, suppliers or consultants, are certified MBEs or WBEs they shall be identified as an MBE or WBE within the Utilization Plan.

1. Letter(s) of Intent

Except as set forth below, a Bid or Quotation shall include with its Utilization Plan, Letter(s) of Intent executed by each MBE and WBE included in the Utilization Plan and by the entity submitting the Bid or Quotation, which sets forth that each MBE and WBE intends to perform as a subcontractor, supplier, joint venture partner and/or consultant on the contract. The Letters of Intent must accurately detail the work to be performed by the MBE or WBE firm and the agreed rates and/or prices to be paid. Failure to submit all Letter(s) of Intent as required may result in the Contract Compliance Director's determination that a Bid or Quotation is not responsive and shall be cause to reject the Bid or Quotation.

All commitments made by a Bid or Quotation in its Utilization Plan must conform to those included in the submitted Letter(s) of Intent. The Contract Compliance Administrator reserves the right to request supplemental information regarding the Letter(s) of Intent submitted with a Bid or Quotation and such information shall be furnished. (Reference Economic Disclosure Section for a format sample of a Letter of Intent)

2. Letter(s) of Certification

Only **current** Letters of Certification from one of the following entities may be accepted as certification of MBE/WBE status:

- County of Cook
- City of Chicago (NOTE: firms certified by the City of Chicago in any area other than Construction must complete and submit a Personal Net Worth/Size Standard Affidavit. This form can be downloaded online at www.cookcountyil.gov/contractcompliance)

or any other governmental body or agency approved by the Contract Compliance Director as applying certification standards substantially similar to those applied by the County of Cook may also be accepted.

The Contract Compliance Director retains the right to reject the certification of any MBE or WBE on the ground that it does not meet the County's definition of a MBE or WBE.

3. Joint Venture Affidavit

In the event a Bid or Quotation achieves MBE and/or WBE participation by entering into a Joint Venture, the Bid or Quotation shall include the required Joint Venture Affidavit which can be downloaded online at www.cookcountyil.gov/contractcompliance). Such Joint Venture Affidavit shall be submitted with the Bid or Quotation along with **current** Letter(s) of Certification.

B. Reduction/Waiver Petition

In the event a Bid or Quotation is unable to meet the applicable contract MBE and WBE participation goals, the Bid or Quotation must include a Petition for Reduction/Waiver and submit the Petition with its Bid or Quotation. The Petition for Reduction/Waiver shall be supported with evidence and sufficient documentation to demonstrate the Bid's or Quotation's Good Faith Efforts in attempting to achieve the applicable MBE and WBE goals. Failure to submit a Petition for Reduction of Waiver as required may result in the Contract Compliance Director's determination that a Bid or Quotation is not responsive and shall be cause to reject the Bid or Quotation.

III. REDUCTION/WAIVER OF MBE/WBE GOALS

A. Granting a Reduction/Waiver Request.

1. The determination of the adequacy of the Good Faith Efforts to utilize MBEs and WBEs in a Bid or Quotation will be evaluated on the basis of the actions in attempting to achieve MBE and WBE participation goals set forth in the Bid or Quotation. Examples of actions constituting Good Faith Efforts for a Bid or Quotation are set forth within the Ordinance and in the "Petition for Reduction/Waiver of MBE/WBE Participation Goals" contained in the Bid or Quotation Documents.

2. The Contract Compliance Director may grant the Petition for Reduction/Waiver based upon the following criteria: (a) sufficient qualified MBEs and WBEs capable of providing the goods or services required by the contract are unavailable despite the good faith efforts of the contractor; (b) the specifications and the reasonable and necessary requirements for performing the contract make it impossible or economically infeasible to divide the contract into sufficiently small tasks or quantities to enable the contractor to utilize MBEs and WBEs in accordance with the applicable goals; (c) the price(s) required by any potential MBE or WBE is more that 10% above competitive levels; and (d) any other factor determined to be relevant by the Contract Compliance Director.

B. Denying a Reduction/Waiver Request.

1. If the Contract Compliance Director determines that a Bid or Quotation has not demonstrated adequate Good Faith Efforts to meet the applicable contract MBE and WBE goals, the Contract Compliance Director may deny a Petition for Reduction/Waiver and declare the Bid or Quotation non-responsive and recommend rejection of the Bid or Quotation.

2. Failure to undertake and/or to document adequate Good Faith Efforts shall be cause to deny a Petition for Reduction/Waiver. Determination of the adequacy of a Bid's or Quotation's Good Faith Effort will be evaluated on the basis of the Bid's or Quotation's actions as of the date of the Bid or Quotation opening.

MINORITY AND WOMEN BUSINESS ENTERPRISES
COOK COUNTY ORDINANCE CHAPTER 34, DIVISION 8, SECTION 34-260 to SECTION 34-300

IV. CHANGES IN CONTRACTOR'S UTILIZATION PLAN

A. Contractor, during its performance of the Contract, may not change the MBE or WBE commitments specified in its Utilization Plan, including but not limited to, terminating a MBE or WBE contract, reducing the scope of the work to be performed by a MBE/WBE, or decreasing the price to a MBE/WBE, except as otherwise provided by the Ordinance.

B. Where an enterprise under the Contact was previously considered to be a MBE or WBE but is later found not to be, or work is found not to be creditable toward the MBE or WBE goals as stated in the Utilization Plan, the Contractor shall seek to discharge the disqualified enterprise, upon proper written notification to the Contract Compliance Administrator, and make every effort to identify and engage a qualified MBE or WBE as its replacement. Failure to obtain a MBE or WBE replacement within 30 working days of the Contract Compliance Administrator's written approval of the removal of a MBE or WBE may result in the termination of the contract or the imposition of such remedy authorized by the Ordinance, unless a written Petition for Reduction/Waiver is granted to Contractor allowing Contractor to award the work to a non-MBE or WBE.

V. NON-COMPLIANCE

If the County determines that the Contractor has failed to comply with its contractual commitments or any portion of the Ordinance or this provision, the Contract Compliance Administrator will notify the Contractor of such noncompliance and may take any and all appropriate actions as set forth within the Ordinance.

VI. REPORTING/RECORD-KEEPING REQUIREMENTS

The Contractor is required to comply with the reporting and record-keeping requirements as set forth in the Ordinance and as established by the Contract Compliance Administrator. Upon award of a Contract, Contractor is responsible for acquiring all necessary County reporting and record-keeping forms which will be made available in the Office of Contract Compliance.

VII. EQUAL EMPLOYMENT OPPORTUNITY

Compliance with MBE and WBE requirements will not diminish or supplant Equal Employment Opportunity and Civil Rights provisions as required by law as they relate to contractor and subcontractor obligations.

Any questions regarding this section should be directed to:

Office of Contract Compliance
118 North Clark Street, Room 1020
Chicago, Illinois 60602
(312) 603-5502

Assist Agencies

ILLINOIS DEPARTMENT OF TRANSPORTATION
Bureau of Local Roads and Streets
201 West Center Court
Schaumburg, IL 60196
847-705-4795
847-705-4203 (Fax)
Moud.Ahmad@illinos.gov

Carnice Carey
Executive Director
Cosmopolitan Chamber of Commerce
30 E. Adams Street, Suite 1050
Chicago, IL 60603
312-786-0212
312-786-9079 (FAX)
ccarey@cosmochamber.com

Mr. Miguel Nogueras
Executive Director
Puerto Rican Chamber of Commerce
2450 West Division
Chicago, IL 60622
773-904-7996
773-583-3118 (FAX)

ILLINOIS ROAD BUILDERS
500 Park Boulevard
Itasca, IL 60143
630-773-1220
630-773-1231 (FAX)
Liz@irtba.org
Annette@irtba.org

TARGET GROUP, INC.
330 South Wells Street
Suite 400
Chicago, IL 60606
312-873-0200
312-873-0299 (FAX)
jwilliams@targetgroupinc.ocm

Ms. Sheila Hill Morgan
Executive Director
CHICAGO MINORITY SUPPLIER DEVELOPEMTN COUNCIL
(C.M.S.D.C.)
105 West Adams
Chicago, IL 60603
312-755-8880
312-755-8890 (FAX)
shillmorgan@chicagomsdc.org

Victor Davis
Contractor Development Program
CHICAGO URBAN LEAGUE
4510 South Michigan Avenue
Chicago, IL 60653
773-451-3559
773-285-7772 (FAX)
twatley@thechicagourbanleague.org

Ms. Beth Doria
FEDERATION of WOMEN CONTRACTORS
5650 South Archer Avenue
Chicago, IL 60638
312-360-1122
312-360-0239 (FAX)
fwcchicago@aol.com

Ms. Joyce Shannahan
Director
INDUSTRIAL COUNCIL of NEARWEST
2023 West Carroll Avenue
Chicago, IL 60612
312-421-3941
312-421-1871 (FAX)
joyce@industrialcouncil.com

D. Lorenzo Padron
Director of Procurement
LATIN AMERICAN CHAMBER of COMMERCE
3512 West Fullerton Avenue
Chicago, IL 60647
773-252-5211
773-252-7065 (FAX)
randrade@latinamericanchamberofcommerce.com

Mr. Frank Aguilar
President
LITTLE VILLAGE 26th STREET AREA CHAMBER OF COMMERCE
3610 West 26th Street
Chicago, IL 60623
773-521-5387
312-521-5387 (FAX)
senortamale@msn.com

Perry Gunn
Executive Director
NORTH RIVER COMMISSION/LADCOR
3403 West Lawrence – Suite 201
Chicago, IL 60625
773-478-0202
773-478-0282

Ms. Angela R. Johnson
National Director of International Trade Bureau
RAINBOW P.U.S.H.
930 East 50th Street
Chicago, IL 60615
773-373-3366
312-373-3571 (FAX)
mturner@rainbowpush.org

Ms. Patricia Showers
Executive Director
UPTOWN CENTER/HULL HOUSE
4520 North Beacon
Chicago, IL 60640
773-561-3500
312-561-3507 (FAX)
croeschley@hullhouse.org

Ms. Emilia DiMenco
Chief Operating Officer
WOMEN'S BUSINESS DEVELOPMENT CENTER
8 South Michigan
Suite 400
Chicago, IL 60604
312-853-3477
312-853-0145 (FAX)
edimenco@wbdc.org

Sharah Garrett
American Council of Engineering Companies of Illinois (ACEC Illinois)
5221 South 6th Street Road
Suite 120
Springfield, IL 62703
217-529-7430
sharah@acecil.org

Cook County Departments

Cook County Office of the Chief Procurement Officer
118 N. Clark Street – Room 1018
Chicago, Illinois 60602
312-603-6129

Cook County Department of Transportation and Highways
Contract Documents Administrator
69 W. Washington Street – Suite 2400
Chicago, Illinois 60602
312-603-1830

Cook County Office of Contract Compliance
118 North Clark Street
10th Floor
Chicago, Illinois 60602
312-603-5502

COOK COUNTY

DEPARTMENT OF TRANSPORTATION AND HIGHWAYS

SPECIAL PROVISION
FOR
SPECIFIC EQUAL EMPLOYMENT OPPORTUNITY RESPONSIBILITIES
NONFEDERAL-AID CONTRACTS

1) General

a) The requirements set forth herein shall constitute the specific affirmative action requirements under this contract and supplement the non-discrimination requirements contained elsewhere in this proposal.

b) The contractor will work with the Cook County Department of Transportation and Highways in carrying out Equal Employment Opportunity (EEO) obligations and in their reviews of activities under the contract.

c) The contractor, and all subcontractors holding subcontracts (not including material suppliers) of $10,000.00 or more, will comply with the following minimum specific requirement activities of equal employment opportunity the contractor will include these requirements in every subcontract of $10,000.00 or more with such modification of language as is necessary to make them binding on the subcontractor.

2) Equal Employment Opportunity Policy

The contractor will accept as operating policy the following statement which is designed to further the provision of Equal Employment Opportunity to all persons, and to promote the full realization of equal employment opportunity through a positive continuing program:

"It is the policy of this company to ensure that applicants are employed, and that employees are treated during employment without regard to their race, religion, sex, color, national origin, age or disability. Such action shall include: employment, upgrading, demotion, or transfer; recruitment or recruitment advertising; layoff or termination; rates of pay or other forms of compensation; and selection for training, including apprenticeship, preapprenticeship, and/or on-the-job training."

3) Equal Employment Opportunity Officer

The contractor will designate and make known to the Cook County Department of Transportation and Highways contracting officers an EEO officer who will have the responsibility for and must be capable of effectively administering and promoting an active contractor program of Equal Employment Opportunity and who must be assigned adequate authority and responsibility to do so.

4) Dissemination of Policy

a) All members of the contractor's staff who are authorized to hire, supervise, promote and discharge employees, or who recommend such action, or who are substantially involved in such action, will

be made fully cognizant of, and will implement, the contractor's EEO policy and contractual responsibilities to provide Equal Employment Opportunity in each grade and classification of employment, to ensure that the above agreement will be met, the following actions will be taken as a minimum:

(1) periodic meetings of supervisory and personnel office employees will be conducted before the start of work and then not less often than once every six months, at which time the contractor's EEO policy and its implementation will be reviewed and explained. The meetings will be conducted by the EEO officer.

(2) All new supervisory or personnel office employees will be given a thorough indoctrination by the EEO officer, covering all major aspects of the contractor's EEO obligations within thirty (30) days following their reporting for duty with the contractor.

(3) All personnel who are engaged in direct recruitment for the project will be instructed by the EEO officer in the contractor's procedures for locating and hiring minority and female employees.

b) In order to make the contractor's EEO policy known to all employees, prospective employees and potential sources of employees, i.e., schools, employment agencies, labor unions (where appropriate), college placement officers, etc., the contractor will take the following actions:

(1) Notices and posters setting forth the contractor's EEO policy will be placed in areas readily accessible to employees, applicants for employment and potential employees.

(2) The contractor's EEO policy and the procedures to implement such policy will be brought to the attention of employees by means of meetings, employee handbooks, or other appropriate means.

5) Recruitment

a) When advertising for employees, the contractor will include in all advertisements for employees the notation: "an Equal Opportunity Employer". All such advertisements will be published in newspapers, or other publications, having a large circulation among minority groups in the area from which the project work force would normally be derived.

b) The contractor will, unless precluded by a valid bargaining agreement, conduct systematic and direct recruitment through public and private employee referral sources likely to yield qualified minority and female applicants; including, but not limited to, state employment agencies, schools, colleges and minority and female organizations. To meet this requirement, the contractor will identify sources of potential minority and female employees, and establish with such identified sources procedures whereby minority and female applications may be referred to the contractor for employment consideration.

In the event the contractor has a valid bargaining agreement providing for exclusive hiring hall referral, he is expected to observe the provisions of that agreement to the extend that the system permits the contractor's compliance with eeo contract provisions.

c) The contractor will encourage present employees to refer minority and female applicants for employment by posting appropriate notices or bulletins in areas accessible to all such employees. In addition, information and procedures with regard to referring minority and female applicants will be discussed with employees.

6) Personnel Actions

Wages, working conditions, and employee benefits shall be established and administered, and personnel actions of every type, including hiring, upgrading, promotion, transfer, demotion, layoff, and terminations, will be taken without regard to race, color, religion, sex, national origin, age or disability. The following procedures shall be followed:

a) The contractor will conduct periodic inspections of project sites to insure that working conditions and employee facilities do not indicate discriminatory treatment of project site personnel.

b) The contractor will periodically evaluate the spread of wages paid within each classification to determine any evidence of discriminatory wage practices.

c) The contractor will periodically review selected personnel actions in depth to determine whether there is evidence of discrimination. Where evidence is found, the contractor will promptly take corrective action. If the review indicates that the discrimination may extend beyond the actions reviewed, such corrective action shall include all affected persons.

d) The contractor will promptly investigate all complaints of alleged discrimination made to the contractor in connection with the obligations under this contract, will attempt to resolve such complaints, and will take appropriate corrective action within a reasonable time. If the investigation indicates that the discrimination may affect persons other than the complainant, such corrective action shall include such other persons. Upon completion of each investigation, the contractor will inform every complainant of all of the avenues of appeal.

7) Training and Promotion

a) The contractor will assist in locating, qualifying and increasing the skills of minority and female employees and applicants for employment.

b) Consistent with the contractor's work force requirements and as permissible under federal and state regulations, the contractor shall make full use of training programs, i.e., apprenticeship, and on-the-job training programs for the geographical area of contract performance.

c) The contractor will advise employees and applicants for employment of available training programs and entrance requirements for each.

d) The contractor will periodically review the training and promotion potential of minority and female employees and will encourage eligible employees to apply for such training and promotion.

Unions

If the contractor relies in whole or in part upon unions as a source of employees, the contractor will use their best efforts to obtain the cooperation of such unions to increase opportunities form minorities and females within the unions and to effect referrals by such unions of minority and female employees. Actions by the contractor, either directly or through a contractor's association acting as agent, will include the procedures set forth below:

e) The contractor will use best efforts to develop, in cooperation with the unions. Joint training programs aimed toward qualifying more minority and female employees for membership in the unions and increasing the skills of minority and female employees so that they may qualify for higher paying employment.

f) The contractor will use best efforts to incorporate an EEO clause into each union agreement to the end that such union will be contractually bound to refer applicants without regard to their race, color, religion, sex, national origin, age or disability.

g) The contractor is to obtain information as to the referral practices and policies of the labor union except that to the extent such information is within the exclusive possession of the labor union and such labor union refuses to furnish such information to the contractor, the contractor shall so certify to the Cook County Department of Transportation and Highways and shall set forth what efforts have been made to obtain such information.

h) In the event the union is unable to provide the contractor with a reasonable flow of minority and female referrals within the time limit set forth in the collective bargaining agreement, the contractor will, through independent recruitment efforts, fill the employment vacancies without regard to race, color, religion, sex, national origin, age or disability; making full efforts to obtain qualified and/or qualifiable minorities and females. (The U.S. Department of Labor has held that it shall be no excuse that the union with which the contractor has a collective bargaining agreement providing for exclusive referral failed to refer minorities or female employees). In the event the union referral practice prevents the contractor from meeting the obligations pursuant to these special provisions, such contractor shall immediately notify the Cook County Department of Transportation and Highways.

8) Selection of subcontractors, procurement of materials and leasing of equipment

The contractor shall not discriminate on the grounds of race, color, religion, sex, national origin, age or disability in the selection and retention of subcontractors, including procurement of materials and leases of equipment.

a) The contractor shall notify all potential subcontractors and suppliers of his/her EEO obligation under this contract.

b) Minority and Women Owned Business Enterprises, shall have equal opportunity to compete for and perform subcontracts which the contractor enters into pursuant to this contract. The contractor will use best efforts to solicit bids from and to utilize M/WBE subcontractors or subcontractors with meaningful minority and female representation among their employees.

c) The contractor will use his/her best efforts to ensure subcontractor compliance with their EEO obligations.

9) Records and reports

The contractor shall keep such records as necessary to document compliance with the EEO requirements. Such records shall be retained for a period of three (3) years following completion of the contract work and shall be available at reasonable times and places for inspection by authorized representatives of the Cook County Department of Transportation and Highways.

a) The records kept by the contractor shall document the following:

(1) The number of minorities, non-minorities and females employed in each work classification on the project.

(2) The progress and efforts being made in cooperation with unions, when applicable, to increase employment opportunities for minorities and females;

(3) The progress and efforts being made in locating, hiring, training, qualifying, and upgrading minority and female employees; and,

(4) The progress and efforts being made in securing the services of DBE subcontractors or subcontractors with meaningful minority and female representation among their employees.

b) The contractor will submit to the Cook County Department of Transportation and Highways a monthly report every month for the duration of the project, indicating the number of minority, non-minority and female employees currently engaged in each work classification required by contract work and the number of hours worked. This information is to be reported on form SBE-956. If on-the-job training is being required by special provision, the contractor will be required to collect and report training data.

Notice of requirement for affirmative
Action to ensure equal employment
Opportunity (executive order 11246)

(1) The offeror's or bidder's attention is called to the "equal opportunity clause" and the "standard federal equal employment opportunity construction contract specifications" set forth herein.

(2) The goals and timetables for minority and female participation, expressed in percentage terms for the contractor's aggregate workforce in each trade on all construction work in the covered area, are as follows:

APPENDIX A

The following goal for female utilization in each construction craft and trade shall apply to all contractors holding federal and federally assisted construction contracts and subcontracts in excess of $10,000.00. The goal is applicable to the contractor's total on-site construction workforce, regardless of whether or not part of that workforce is performing work on a federal, federally assisted or nonfederally related construction contract or sub contract. Area covered (statewide) goals for women apply nationwide.

Goal	Goal (Percentage)
Female Utilization	6.9

APPENDIX B

Until further notice, the following goals for minority utilization in each construction craft and trade shall apply to all contractors holding federal or federally-assisted construction contracts and subcontracts in excess of $10,000.00 to be performed in the respective geographical areas. The goals are applicable to the contractor's total on-site construction workforce, regardless of whether or not part of that workforce is performing work on a federal, federally-assisted or nonfederally related construction contract or subcontract.

Economic area	Goal (percent)
083 Chicago, IL Smsa Counties: 1600 Chicago, IL - IL - Cook, DuPage, Kane, Lake, Mchenry, Will	19.6

These goals are applicable to all the contractor's construction work (whether or not it is federal or federally assisted) performed in the covered area. If the contractor performs construction work in a geographical area located outside of the covered area, it shall apply the goals established for such geographical area where the work is actually performed. With regard to this second area, the contractor also is subject to the goals for both its federally involved and nonfederally involved construction. The contractor's compliance with executive order and the regulations in 41 cfr part 60-4 shall be based on its implementation of the equal opportunity clause, specific affirmative action obligations required by the provisions and specifications set forth in its federally assisted contracts, and its efforts to meet the goals established for the geographical area where the contract resulting from this solicitation is to be performed. The hours of minority and female employment and training must be substantially uniform throughout the length of the contract, and in each trade, and the contractor shall make a good faith effort to employ minorities and women evenly on each of its projects. The transfer of minority of female employees or trainees from contractor to contractor or from project to project for the sole purpose of meeting the contractor's goals shall be a violation of the contract, the executive order and the regulations in 41 cfr part 60-4. Compliance with the goals will be measured against the total work hours performed.

(3) As used in this notice, and in the contract resulting from this solicitation, the "covered area" is the entire state of Illinois for the goal set forth in **Appendix A** and the county or counties in which the work is located for the goals set forth in **Appendix B**.

Standard federal equal employment
Opportunity construction contract
Specifications (executive order 11246)

1) As used in these specifications:

   a) "covered area" means the geographical area described in the solicitation from which this contract resulted;

   b) "director" means director, office of federal contract compliance programs, united states department of labor, or any person to whom the director delegates authority;

   c) "employer identification number" means the federal social security number used on the employer's quarterly federal

      Tax return, U.S. Treasury Department form 941.

   d) "minority" includes:

      i) Black (all persons having origins in any of the black African racial groups not of Hispanic origins);

      ii) Hispanic (all persons of Mexican, Puerto Rican, Cuban, central or south American or other Spanish culture or origin, regardless of race);

      iii) Asian and pacific islander (all persons having origins in any of the original peoples of the far east, southeast Asia, the Indian subcontinent, or the pacific islands); and

      iv) American Indian or Alaskan native (all persons having origins in any of the original peoples of north America and maintaining identifiable tribal affiliations through membership and participation or community identification).

2) Whenever the contractor, or any subcontractor at any tier, subcontracts a portion of the work involving any construction trade, it shall physically include in each subcontract in excess of $10,000.00 the provisions of these specifications and the notice which contains the applicable goals for minority and female participation and which is set forth in the solicitations from which this contract resulted.

3) If the contractor is participating (pursuant to 41 cfr 60-4.5) in a hometown plan approved by the U. S. Department of Labor in the covered area wither individually or through an association, its affirmative action obligations on all work in the plan area (including goals and timetables) shall be in accordance with that plan for those trades which have unions participating in the plan. Contractors must be able to demonstrate their participation in and compliance with the provisions of any such hometown plan. Each contractor or subcontractor participating in an approved plan is individually required to comply with its obligations under the EEO clause, and to make a good faith effort to achieve each goal under the plan in each trade in which it has employees. The overall good faith performance by other contractors or subcontractors toward a goal in an approved plan does not excuse any covered contractor's or subcontractor's failure to take good faith efforts to achieve the plan goals and timetables.

4) The contractor shall implement the specific affirmative action standards provided in paragraphs 7a through p of these specifications. The goals set forth in the solicitation from which this contract

resulted are expressed as percentages of the total hours of employment and training of minority and female utilization the contractor should reasonably be able to achieve in each construction trade in which it has employees in the covered area. Covered construction contractors performing construction work in geographical areas where they do not have a federal or federally assisted construction

Contract shall apply the minority and female goals established for the geographical area where the work is being performed. Goals are published periodically in the federal register in notice form, and such notices may be obtained from any office of federal contract compliance programs office or from federal procurement contracting officers. The contractor is expected to make substantially uniform progress toward its goals in each craft during the period specified.

5) Neither the provisions of any collective bargaining agreement, nor the failure by a union with whom the contractor has a collective bargaining agreement, to refer either minorities or women shall excuse the contractor's obligations under these specifications, executive order 11246, or the regulations promulgated pursuant thereto.

6) In order for the nonworking training hours of apprentices and trainees to be counted in meeting the goals, such apprentices and trainees must be employed by the contractor during the training period, and the contractor must have made a commitment to employ the apprentices and trainees at the completion of their training, subject to the availability of employment opportunities. Trainees must be trained pursuant to training programs approved by the U.S. Department of Labor.

7) The contractor shall take specific affirmative actions to ensure equal employment opportunity. The evaluation of the contractor's compliance with these specifications shall be based upon its effort to achieve maximum results from its actions. The contractor shall document these efforts fully, and shall implement affirmative action steps at least as extensive as the following:

   a) Ensure and maintain a working environment free of harassment, intimidation, and coercion at all sites, and in all facilities at which the contractor's employees are assigned to work. The contractor, where possible, will assign two or more women to each construction project. The contractor shall specifically ensure that all foremen, superintendents, and other on-site supervisory personnel are aware of and carry out the contractor's obligation to maintain such a working environment, with specific attention to minority or female individuals working at such sites or in such facilities.

   b) Establish and maintain a current list of minority and female recruitment sources, provide written notification to minority and female recruitment sources and to community organizations when the contractor or its unions have employment opportunities available, and maintain a record of the organizations' responses.

   c) Maintain a current file of the names, addresses and telephone numbers of each minority and female off-the street applicant and minority or female referral from a union, a recruitment source or community organization and of what action was taken with respect to each such individual. If such individual was sent to the union hiring hall for referral and was not referred back to the contractor by the union or, if referred, not employed by the contractor, this shall be documented in the file with the reason therefore, along with whatever additional actions the contractor may have taken.

   d) Provide immediate written notification to the director when the union or unions with which the contractor has a collective bargaining agreement has not referred to the contractor a minority

person or woman sent by the contractor, or when the contractor has other information that the union referral process has impeded the contractor's efforts to meet its obligations.

e) Develop on-the-job training opportunities and/or participate in training programs for the area which expressly include minorities and women, including upgrading programs and apprenticeship and trainee programs relevant to the contractor's employment needs, especially those programs funded or approved by the Department of Labor. The contractor shall provide notice of these programs to the sources complied under 7b above.

f) Disseminate the contractor's eeo policy by providing notice of the policy to unions and training programs and requesting their cooperation in assisting the contractor in meeting its eeo obligations; by including it in any policy manual and collective bargaining agreement; by publicizing it in the company newspaper, annual report, etc.; by specific review of the policy with all management personnel and with all minority and female employees at least once a year; and by posting the company eeo policy on bulletin boards accessible to all employees at each location where construction work is performed.

g) Review, at least annually, the company's EEO policy and affirmative action obligations under these specifications with all employees having any responsibility for hiring, assignment, layoff, termination or other employment decisions including specific review of these items with onsite supervisory personnel such as superintendents, general foremen, etc., prior to the initiation of construction work at any job site. A written record shall be made and maintained identifying the time and place of these meetings, persons attending, subject matter discussed, and disposition of the subject matter.

h) Disseminate the contractor's EEO policy externally by including it in any advertising in the news media, specifically including minority and female news media, and providing written notification to and discussing the contractor's eeo policy with other contractors and subcontractors with whom the contractor does or anticipates doing business.

i) Direct its recruitment efforts, both oral and written, to minority, female and community organizations, to schools with minority and female students and to minority and female recruitment and training organizations serving the contractor's recruitment area and employment needs. Not later than one month prior to the date for the acceptance of applications for apprenticeship of other training by any recruitment source, the contractor shall send written notifications such as the above, describing the openings, screening procedures, and test to be used in the selection process.

j) Encourage present minority and female employees to recruit other minority persons and women and, where reasonable, provide after school, summer and vacation employment to minority and female youth both on the site and in other areas of a contractor's workforce.

k) Validate all tests and other selection requirements here there is an obligation to do so under 41 cfr part 60-3.

l) Conduct, at least annually, an inventory and evaluation at least of all minority and female personnel for promotional opportunities and encourage these employees to seek or to prepare for, through appropriate training, etc., such opportunities.

m) Ensure that seniority practices, job classifications, work assignments and other personnel practices, do not have a discriminatory effect by continually monitoring all personnel and employment related activities to ensure that the EEO policy and the contractor's obligations under these specifications are being carried out.

n) Ensure that all facilities and company activities are nonsegregated except that separate or single-user toilet and necessary changing facilities shall be provided to assure privacy between the sexes.

o) Document and maintain a record of all solicitations of offers for subcontracts from minority and female construction contractors and suppliers, including circulation of solicitations to minority and female contractor associations and other business associations.

p) Conduct a review, at least annually, of all supervisors' adherence to and performance under the contractor's EEO policies and affirmative action obligations.

8) Contractors are encouraged to participate in voluntary associations which assist in fulfilling one or more of their affirmative action obligations (7a through p). The efforts of a contractor association, joint contractor-union, contractor-community , or other similar group of which the contractor is a member and participant, may be asserted as fulfilling any one or more of its obligations under 7a through p of these specifications provided that the contractor actively participates in the group, makes every effort to assure that the group has a positive impact on the employment of minorities and women in the industry, ensures that the concrete benefits of the program are reflected in the contractor's minority and female workforce participation, make a good faith effort to meet its individual goals and timetables, and can provide access to documentation which demonstrates the effectiveness of actions taken on behalf of the contractor. The obligation to comply however is the contractor's and failure of such a group to fulfill and obligation shall not be a defense for the contractor's noncompliance.

9) A single goal for minorities and a separate single goal for women have been established. The contractor, however, is required to provide equal employment opportunity and to take affirmative action for all minority groups, both male and female, and all women, both minority and non-minority. Consequently, the contract may be in violation of the executive order if a particular group is employed in a substantially disparate manner, (for example, even though the contractor has achieved its goal for women generally, the contractor may be in violation of the executive order if a specified minority group of women is underutilized).

10) The contractor shall not use the goals and timetables of affirmative action standards to discriminate against any person because of race, color, religion, sex, or national origin.

11) The contractor shall not enter into any subcontract with any person or firm debarred from government contracts pursuant to executive order 11246.

12) The contractor shall carry out such sanctions and penalties for violation of the specifications and of the equal opportunity clause, including suspension, termination and cancellation of existing subcontracts, as may be imposed or ordered pursuant to executive order 11246, as amended and its implementing regulations, by the office of federal contract compliance programs. Any contractor who fails to carry out sanctions and penalties shall be in violation of these specifications and executive order 11246, as amended.

13) The contractor, in fulfilling its obligations under these specifications, shall implement specific affirmative action steps, at least as extensive as those standards prescribed in paragraph 7 of these specifications, so as to achieve maximum results from its efforts to ensure equal employment opportunity. If the contractor fails to comply with the requirements of the executive order, the implementing regulations, or these specifications, the director shall proceed in accordance with 41 cfr 60-4.8.

14) The contractor shall designate a responsible official to monitor all employment related activity to ensure that the company EEO policy is being out, to submit reports relating to provisions hereof as may be required by the government and to keep records. Records shall at least include for each employee the name, address, telephone numbers, construction assigned, social security number, race, sex, status (e.g., mechanic, apprentice, trainee, helper, or laborer), dates of changes of status, hours worked per week in the indicated trade, rate of pay, and locations at which the work was performed. Records shall be maintained in an easily understandable and retrievable form; however, to the degree that existing records satisfy this requirement, contractors shall not be required to maintain separate records.

15) Nothing herein provided shall be construed as a limitation upon the application of other laws which establish standards of compliance or upon the application requirements for the hiring of local or other area residents (e.g., those under the Public Works Employment Act of 1977 and the Community Development Block Grant Program).

SPECIAL PROVISION
FOR
INSURANCE REQUIREMENTS

Within fourteen (14) days of notification of award, the bidder shall, at its cost, procure and maintain insurance with coverages and in amounts not less than (i) governing law, (ii) as specified herein, or (iii) as actually maintained by Contractor. The cost to the Contractor for providing this insurance coverage shall be considered as included in the cost of the contract.

Nothing contained in these insurance requirements is to be construed as limiting the extent of the Contractor's responsibility for payment of damages resulting from its operations under this Contract.

Contractor shall require all sSubcontractors to provide the insurance required in this Agreement, or Contractor may provide said coverage for sSubcontractors. All sSubcontractors are subject to the same insurance requirements as Contractor unless specified otherwise.

The Cook County Department of Risk Management maintains the right to modify, deleterights to modify, delete, alter or change these requirements.

The Contractor shall maintain insurance as set forth below.

A. Workers Compensation Insurance

In accordance with the Laws of the State of Illinois and including Employer's Liability Insurance with limits not less than the following:

The Workers Compensation policy shall also include the following provisions:

Bodily Injury by accident	$1,000,000 each accident
Bodily Injury by Disease	$1,000,000 policy limit
Bodily Injury by Disease	$1,000,000 each employee

B. Commercial General Liability Insurance

For bodily injury, personal injury and property damage on an occurrence form (ISO Form CG 0001 or equivalent) with limits not less than the following:

Each Occurrence	$1,000,000
General Aggregate per Project	$2,000,000
Products – Completed Operations Aggregate	$2,000,000

i) All Premises and Operations.

ii) Explosion, collapse and underground damage.

iii) Contractual liability for the obligations assumed in the Indemnification and Hold Harmless agreement.

iii)iv) Contractor's Protective coverage for independent contractors or subcontractors employed by Contractor.

Such policy must contain (i) ISO Additional Insured Endorsements CG 2010 **and** CG 2037 or equivalent, and (ii) severability of interest/separation of insured s' clause. The products and completed operations coverage (including ISO Endorsement CG 2037 or equivalent) must be maintained for a period of two years after final acceptance of the Project.

C. Commercial Automobile Liability Insurance

For bodily injury and property damage arising from the ownership, maintenance or use of owned, hired and non-owned vehicles (ISO Form CA 00 01 or equivalent) with a limit no less than $1,000,000 per accident.

Cook County, its officials and employees shall be listed as additional insured s with respect to operations performed.

D. Excess Liability

Such policy shall be excess over Commercial General Liability, Automobile Liability, and Employer's Liability with limits not less than the following amounts:

Each Occurrence:	$5,000,000
General Aggregate per Project:	$5,000,000

Subcontractors performing work or Services for the Contractor must maintain limits of not less than $5,000,000 with the same terms herein.

Cook County, its officials and employees shall be listed as additional insured with respect to operations performed.

E. Contractor's Pollution Liability

Contractor will maintain pollution liability insurance with limits of liability of $1,000,000 each claim and aggregate with a deductible no greater than $100,000 each claim.

The policy will provide coverage for sums the Contractor becomes legally obligated to pay as loss as a result of claims for bodily injury, property damage or clean-up costs caused by a pollution incident. Pollution incidents will include the discharge, dispersal, release or escape of any solid, liquid, gaseous or thermal irritant or contaminant, including but not limited to smoke, vapors, soot, fumes, acids, alkalis, toxic chemicals, medical waste, waste materials, lead, asbestos, silica, hydrocarbons and microbial matter.

If the policy is a 'claims made' form or if any coverage under this policy is written as 'claims made', coverage will be maintained for two years after project completion.

Additional Insured

The required insurance policies, with the exception of the Workers Compensation, must, must name **Cook County, its officials and employeesand employees as additional insuredsinsured,** with respect to operations performed. The Commercial General Liability policy shall specifically include **ISO Additional Insured Endorsements CG 2010 and CG 2037 or equivalent**. Contractor's insurance shall be primary and non-contributory with any insurance maintained by such additional insuredsinsured.

No other form will be accepted without prior approval of the Cook County Department of Transportation and Highways. All liability policies shall entirely delete ISO endorsements CG21 39 10 93 or similar endorsement or policy provision which limit contractual liability.

As part of the provisions and requirement for this project, other entities may be required to be added as an "additional insured" on the liability insurance of the Contractor. The Contractor shall assure these entities are included as additional insuredsinsured.

Waiver of Subrogation Endorsements

All insurance policies must contain a Waiver of Subrogation Endorsement in favor of Cook County.

Qualification of Insurers

All insurers must possess an A.M. Best rating of A- VII or better and be authorized to do business in Illinois. The insurance limits required herein may be satisfied by a combination of primary, umbrella and/or excess liability insurance policies.

Companies with ratings lower than (A-) or VII will be acceptable only upon written consent of Superintendent of Transportation and Highways. Upon written request from the Superintendent of Transportation and Highways, Contractor must supply certified copies of the required insurance policies within ten (10) days.

Certificates of Insurance

Within fourteen (14) days of notification of award, the Contractor must provide properly completed certificates of insurance on Acord forms which evidence the required insurance. The certificates must specifically list each of the required additional insuredsinsured and specify that Waiver of Subrogation Endorsements apply. The certificates must be accompanied by the required Commercial General Liability ISO Additional Insured Endorsements CG 2010 **and** CG 2037 (or equivalent).

The receipt of any certificate of insurance does not constitute agreement by the County that the insurance requirements have been fully met or that the insurance policies indicated on the certificate of insurance are in compliance with the insurance required above. Coverage shall be in companies subject to approval of the County.

In no event shall any failure of the County to receive certificates of insurance required hereof or to demand receipt of such Certificates of Insurance be construed as a waiver of Contractor's obligations to obtain insurance pursuant to these insurance requirements. The certificates shall also include the following: **The coverage and limits conform to the minimum required by Article 107.27 of the Illinois Department of Transportation Standard Specifications for Road and Bridge Construction.**

Notice of Cancellation or Non-Renewal

Contractor shall provide the Superintendent of Highways and Transportation with thirty (30) days advance written notice in the event any required insurance will be cancelled, materially reduced or non-renewed. Contractor shall secure replacement coverage to comply with the stated insurance requirements and provide new certificates of insurance to the Superintendent of Transportation and Highways. .

In the event the insurance is cancelled before the completion of the project, the County shall reserve its rights under the contract, including but not limited to its rights under Article 108.07 of the Standard Specifications For Road and Bridge Construction, to order the job shut down until the Contractor obtains the required insurance in the amounts stated herein or, the County may obtain the

coverage required and then shall deduct the appropriate premium cost from the monies due the Contractor.

Property Insurance

Contractor is responsible for all loss or damage to personal property (including materials, equipment, tools and supplies) owned, rented or used by Contractor.

SPECIAL PROVISION
FOR
INDEMNIFICATION FOR COOK COUNTY

The Contractor shall indemnify the County of Cook and its commissioners, officials, employees, agents and representatives, and their respective heirs, successors and assigns (the "County") pursuant to the language provided under Section 107.26 of the Standard Specifications for Road and Bridge Construction.

107.26 Indemnification. To the fullest extent permitted by law, the Contractor shall be responsible for any and all injuries to persons or damages to property due to the activities of the Contractor, subcontractors, licensees, invitees, suppliers, agents, or employees arising out of, incident to, or resulting from performance of the contract, or any activity in connection therewith. The Contractor shall indemnify and hold harmless the County of Cook and its commissioners, officials, employees, agents and representatives, and their respective heirs, successors and assigns, from any and all claims, lawsuits, actions, costs, and fees (including reasonable attorney fees and expenses) of every nature or description, arising from, growing out of, or connected with the work, or on account of or in consequence of any neglect in safeguarding the work or on account of or in consequence of using unacceptable materials in constructing the work or because of any act or omission, neglect, or misconduct of the Contractor, its officers, employees, agents, its subcontractor, or subcontractors licensees, invitees, or anyone directly or indirectly employed by them, and/or anyone for whose acts they may be liable or because of any claims or amount recovered by reason of any infringement of any patent, trademark, or copyright or by reason of the violation of any law, ordinance, order or decree. This obligation is binding on the Contractor without regard to whether or not such claim, damage, loss, or expense is caused in part by the act, omission, or negligence of the County and its commissioners, officials, employees, agents and representatives, and their respective heirs, successors and assigns.

In claims against the County by an employee of the Contractor, its officers, employees, agents, its subcontractor, or subcontractors licensees, invitees, or anyone directly or indirectly employed by them, or anyone for whose acts they may be liable, the indemnification herein shall not be limited by a limitation on amount or type of damages payable by or for the Contractor or subcontractor under any employee benefits act including but not limited to the Worker's Compensation Act.

In the event any such claim, lawsuit, or action is asserted, any such money due the Contractor under and by virtue of the contract as shall be deemed necessary by the County for the payment thereof, may be retained by the County for said purpose, or in case no money or insufficient money is due to satisfy such claim, lawsuit, or action, the Contractor's Surety shall remain liable for any payment therefore until any such lawsuit, action, or claim has been settled or has been fully judicially determined and satisfied.

No inspection by the County, its employees or agents shall be deemed a waiver by the County of full compliance with the requirements of the contract. This indemnification shall not be limited by any Performance Bond or insurance protection required of the Contractor in the contract.

SPECIAL PROVISION
FOR
JOINT VENTURES

Contractors submitting a bid as a joint venture shall comply with the following procedures:

1) Contractors may combine their available bidding capacity for a single contract to bid as a joint venture.

2) The joint venture shall be indicated by the filing of a ***Joint Venture Minimum Declaration of Work*** for each of the contracts for which joint venture approval is sought. It identifies the managing partner and indicated the kind and the percentage of work to be performed by each joint venture partner with its own workforce and resources other than work reserved to meet any disadvantage business goal advertised in the contract. The form indicated the joint venture agreement shall be included in the bid. In addition, each joint venture partner firm shall submit an ***Affidavit of Availability***. The ***Joint Venture Minimum Declaration of Work*** and all ***Affidavits of Availability*** **must be included in the bid.** The proposed joint venture shall not be approved if the establishment of a joint venture would unduly restrict competition. A determination that a proposed venture would unduly restrict competition is limited to any of the following reasons:

   a) That the proposed joint venture would consist of more than three (3) qualified contractors.

   b) That the ***Joint Venture Minimum Declaration of Work*** indicated that any one of the proposed joint ventures partners will perform less than ten percent of the non-disadvantage business work with its own workforce and resources.

   c) That for letting items estimates by the Department to be bid at less than $1,000,000.00 more than one of the proposed joint venture partners has the individual qualification ratings and bid the item without the approval of the venture. This determination shall not apply to joint ventures between firms having fifty-one percent or more common controlling ownership or on items where the estimated quantity of asphalt exceeds 10,000 tons or concrete exceeds 5,000 cubic yards. Each proposed joint venture shall submit, with the bid, a ***Joint Venture Certificate of Explanation and Justification*** for each of the contracts estimated at less than $1,000,000.00 for which joint venture approval is sought. The form indicated the circumstances which apply to the joint venture. That is there fifty-one percent (51%) or more common controlling ownership, or does one or more parties to the joint venture not have the financial capacity, work capacity or work categories to complete the project. The ***Joint Venture Certificate of Explanation*** **must be included in the bid.**

3) Contractors whose financial ratings are based upon unaudited financial statements will not be permitted to joint venture with each other to bid contracts which are estimated to exceed $350,000.00. However, such contractors may be permitted to joint venture with contractors who have a financial rating based upon an audited statement to bid contracts estimated to exceed $350,000.00.

4) If a joint venture work rating is limited by its maximum financial rating, the full value of the computed work rating will be used in analyzing the joint venture approval request. However, the combined maximum work rating in any category shall not exceed the combined maximum financial rating of the joint venture.

5) If an approved joint venture is awarded a contract, the kind and percentage of work indicated on the ***Joint Venture Minimum Declaration of Work*** may be amended as many times as necessary by the contractor provided that each partner of the approved joint venture performs at least ten percent of the nondisadvantaged work with its own workforce and resources.

Copies of all required Joint Venture Forms are attached.

Please note that signed and notarized originals of all required Joint Venture Forms mentioned above **must be included in the bid.** This includes ***Affidavits of Availability*** for all parties to the joint venture.

JOINT VENTURE FORMS

Qualified contractors wishing to combine bidding capacity and bid items as joint ventures must submit the appropriate properly completed forms and include them in their bid. The required joint venture forms include: (1) the ORIGINAL *Affidavit of Availability* (BC 57); (2) the ORIGINAL *Joint Venture Minimum Declaration of Work*; and (3) the ORIGINAL *Joint Venture Certificate of Explanation and Justification.*

COOK COUNTY DEPARTMENT OF TRANSPORTATION AND HIGHWAYS
Joint Venture Certificate of Explanation & Justification

Bid Proposal Submission Date: _____
Item No.: _____
Joint Venture Name: _____
Managing Party: _____

Firm #1

Name: _____

Address: _____

Firm #2

Name: _____

Address:- _____

Firm #3

Name: _____

Address: _____

Instructions:

Indicate the circumstances which apply to the Joint Venture.

1) One or more firms do not have the required financial capacity.

Firm #1 Firm #2 Firm #3

Does not have sufficient available prequalification financial rating to perform the work.

2) One or more firms do not have the required work capacity.

Firm #1 Firm #2 Firm #3

Does not have sufficient available prequalification work ratings to perform fifty percent of the work.

3) One or more firms do not perform work in a majority of work categories required to complete the project.

Work categories not performed by the firm:

Firm #1 _____

Firm #2 _____

Firm #3 _____

4) Fifty-one percent (51%) common controlling ownership between firms.

Firm #1 Firm #2 Firm #3

has attached statement indicating the relationship of the firms.

5) Estimated quantity of asphalt for this item exceeds 10,000 tons.

6) Estimated quantity of concrete exceeds 5,000 cubic yards.

7) Estimated costs of project are less than $1,000,000.

I/WE being duly sworn do hereby declare the explanation and justification to be a true and correct statement.

I, WE being duly sworn, do hereby declare the explanation and justification to be a true and correct statement.

Firm #1
Name _____ Title _____
(Print)

_____
Signature (Proprietor, Partner, Officer or Director)

Subscribed and sworn to before me this _____ day of _____, 20 ___. (Notary Seal)

_____ My commission expires on _____
Notary Public

Firm #2
Name _____ Title _____
(Print)

_____
Signature (Proprietor, Partner, Officer or Director)

Subscribed and sworn to before me this _____ day of _____, 20 ___. (Notary Seal)

_____ My commission expires on _____
Notary Public

Firm #3
Name _____ Title _____
(Print)

_____
Signature (Proprietor, Partner, Officer or Director

Subscribed and sworn to before me this _____ day of _____, 20 ___. (Notary Seal)

_____ My commission expires on _____
Notary Public

This form must be submitted with the bid.

COOK COUNTY DEPARTMENT OF TRANSPORTATION AND HIGHWAYS
Joint Venture Minimum Declaration of Work

Bid Proposal Submission Date: _____
Item No.: _____
Joint Venture Name: _____
Managing Party: _____

Firm #1

Name: _____

Address: _____

Firm #2

Name: _____

Address: _____

Firm #3

Name: _____

Address: _____

Instructions:

Indicate the percentage of work to be performed by each firm with their own forces.

	Firm #1	Firm #2	Firm #3
Earthwork	_____	_____	_____
Portland Cement Concrete Paving	_____	_____	_____
Bituminous Plant Mix	_____	_____	_____
Bituminous Aggregate Mixtures	_____	_____	_____
Miscellaneous Bituminous Paving	_____	_____	_____
Cleaning and Sealing Cracks & Joints	_____	_____	_____
Soil Stabilization and Modification	_____	_____	_____
Aggregate Bases and Surfaces	_____	_____	_____
Highway, Railroad & Waterway Structures	_____	_____	_____
Drainage	_____	_____	_____
Electrical	_____	_____	_____
Cover & Seal Coats	_____	_____	_____
Slurry Applications	_____	_____	_____
Miscellaneous Concrete Construction	_____	_____	_____
Landscaping	_____	_____	_____
Seeding & Sodding	_____	_____	_____
Vegetation Spraying	_____	_____	_____
Tree Trimming & Selective Tree Removal	_____	_____	_____

Fencing	_____	_____	_____
Guardrail	_____	_____	_____
Grouting	_____	_____	_____
Painting	_____	_____	_____
Signing	_____	_____	_____
Paint Pavement Marking	_____	_____	_____
Thermoplastic Pavement Marking	_____	_____	_____
Epoxy Pavement Marking	_____	_____	_____
Installation of Raised Pavement Markers	_____	_____	_____
Pavement Texturing & Surface Removal	_____	_____	_____
Cold Milling, Planning & Rototilling	_____	_____	_____
Erection	_____	_____	_____
Demolition	_____	_____	_____
Other	_____	_____	_____

I, WE being duly sworn, do hereby declare the explanation and justification to be a true and correct statement.

Firm #1

Name _____ Title _____
(Print)

_____
Signature (Proprietor, Partner, Officer or Director)

Subscribed and sworn to before me this _____ day of _____, 20 ___. (Notary Seal)

_____ My commission expires on _____
Notary Public

Firm #2

Name _____ Title _____
(Print)

_____
Signature (Proprietor, Partner, Officer or Director)

Subscribed and sworn to before me this _____ day of _____, 20 ___. (Notary Seal)

_____ My commission expires on _____
Notary Public

Firm #3

Name _____ Title _____
(Print)

_____
Signature (Proprietor, Partner, Officer or Director

Subscribed and sworn to before me this _____ day of _____, 20 ___. (Notary Seal)

_____ My commission expires on _____
Notary Public

This form must be submitted with the bid.

SPECIAL PROVISION
FOR
PROPOSAL AGREEMENTS
ADDENDUM RECEIPT

The receipt of the following addenda to the drawings and/or specification is acknowledged:

Addendum No._____
Dated _____

Addendum No._____
Dated _____

Addendum No._____
Dated _____

Addendum No._____
Dated _____

Addendum No._____
Dated _____

NOTE: These Addenda form a part of the Bidding and Contract Documents and modify the Original Documents for this Contract. Receipt of these Addenda shall be acknowledged above. Failure to do so may subject the Bidder to disqualification.

SPECIAL PROVISION
FOR
COMBINATION BIDDING PROCESS

All references to Sections or Articles in this specification shall be construed to mean a specific Section or Article of the Standard Specifications for Road and Bridge Construction, adopted by the Cook County Department of Transportation and Highways.

Combination Bids. The projects listed below with their individual WORKING DAYS and CALENDAR DAYS shall be let in combination:

PROJECT	SECTION	WORKING DAYS	CALENDAR DAYS

A Combination Bid is a total bid received on 2 or more proposals. No Combination Bids other than those specifically set up by the Department will be considered. Separate proposal forms will be issued for each project in the combination so bids may be submitted on the combination as well as on separate units of the combination. The department reserves the right to make the awards on combination bids or separate bids to the best advantage of the Department.

If a Combination Bid is submitted on 2 or more proposals, separate proposals on each individual contract shall also be submitted, and unless separate proposals are submitted, the Combination Bid will not be considered. If the bidder desires to submit a Combination bid, the bidder shall state, in the place provided in the proposal form, the amount of the Combination Bid for the entire combination.

If a Combination Bid is submitted on any stipulated combination, and errors are found to exist in computing the gross sum bid on any one or more of the individual proposals, corrections shall be made, by the Department and the amount of the Combination Bid shall be corrected so that it will be in the same proportion to the sum of the corrected gross sum bid as the Combination Bid submitted was to the sum of the gross bid submitted.

The following provisions shall govern combination bidding:

1) A Combination Bid which is submitted for 2 or more proposals and awarded on that basis shall have the bid prorated against each proposal in proportion to the bid submitted for each proposal.

2) Separate contracts shall be executed for each proposal included in the combination.

3) The proposal guaranties which accompany the individual proposals making up the combination will be considered as also covering the Combination Bid.

4) The completion date for all contracts awarded on a Combination Bid shall be the latest completion date designated for any one or more of the contracts included in the combination, unless otherwise provided in the contract.

5) Contracts awarded in combination for the projects above shall have the WORKING DAYS revised to _____WORKING DAYS, and the CALENDAR DAYS revised to _____CALENDAR DAYS. The "Daily deduction" rate in the Traffic Control Deficiency Deduction Special Provision shall be based on the REVISED CALENDAR DAYS stated above.

6) The Contractor, at his option, may start one project or all projects. WORKING DAYS then shall start as specified in Article 108.04 of the Standard Specifications for Road and Bridge Construction and shall continue from that day forward until all projects are completed.

7) An extension of time for any one or more contracts awarded on a Combination Bid shall automatically extend all contracts awarded on the combination.

8) In the event the Contractor fails to complete any one or all the contracts on the Combination Bid by the contract completion date plus any authorized extension, or the contract working days plus any authorized extension, the liquidated damages shall be determined from the schedule of deductions for each day of the overrun in the contract time in Article 108.09 in the Standard Specifications for Road and Bridge Construction, based on the Combination Bid total, and shall be computed on the combination and prorated against the 2 or more individual contracts based on the dollar value of each contract.

9) The Plans and Special Provisions for each separate contract shall be construed separately for all requirements, except as described in section 1 through 8 listed above.

SPECIAL PROVISION
FOR
PROMPT PAY MECHANISMS (NON FEDERAL AID)

This contract is subject to the following payment obligations:

"As partial payments are made to the contractor in accordance with Article 109.07 of the Standard Specifications for Road and Bridge Construction, the contractor shall make corresponding partial payment within fifteen (15) calendar days to each subcontractor in proportion to the work satisfactorily completed by each subcontractor. The proportionate amount of partial payment due to each subcontractor shall be determined by the quantities measured or otherwise determined as eligible for payment by the Cook County Department of Transportation and Highways included in the partial payment to the contractor. Subcontractors shall be paid in full, including the return of any retainage previously withheld, within fifteen (15) calendar days after the subcontractor's work has been satisfactorily completed."

This Special Provision does not create any rights in favor of any subcontractor against the County of Cook or authorize any cause of action against the County of Cook on account of any payment, nonpayment, delayed payment or interest claimed by application of this Prompt Payment Special Provision. The Cook County Department of Transportation and Highways will neither determine the reasonableness of any cause for delay of payment nor enforce any claim to payment, including interest. Moreover, the Cook County Department of Transportation and Highways will not approve any delay or postponement of the fifteen (15) day requirement. State law creates remedies available to any subcontractor or material supplier, regardless of tier, who has not been paid for work properly, performed or material furnished. These remedies are lien against public funds set forth in Section 23© of the Mechanics Lien Act, 770 ILCS 60/23©, and a recovery on the contractors payment bond in accordance with the Public Construction Bond Act, 30 ILCS 550.

SPECIAL PROVISION
FOR
CONTRACT CLAIMS

All References to Sections or Articles in this specification shall be construed to mean specific Section or Article of the Standard Specifications for Road and Bridge Construction, adopted by the Cook County Department of Transportation and Highways.

109.09 Contract Claims. Revise the second sentence of subparagraph (a) of Article 109.09 to read:

"All claims shall be submitted to the Engineer."

Revise subparagraph (e) of this Article to read:

"Procedure. The department provides three administrative levels for claims review:

Level I	Resident Engineer
Level II	Bureau Chief, Construction Bureau
Level III	Superintendent of Transportation and Highways

All Claims shall first be submitted at Level I. This Engineer shall consider all information submitted with the claim within 90 days after receipt. Claims not conforming to this Article will be returned without consideration. The Resident Engineer may schedule a claim presentation meeting if in the Resident Engineer's judgment such a meeting would aid in resolution of the claim, otherwise a decision will be based on the claim documentation submitted. If a decision is not rendered within 90 days, or if the Contractor disputes the decision, an appeal to Level II shall be made by the Contractor. An appeal to Level II shall be made by the Contractor in writing to the Resident Engineer within 45 days after the date of the Level I decision, and shall include two (2) additional copies of the claim and supporting documentation. Review of the claim at Level II shall be conducted as a full evaluation of the claim. A claim presentation meeting may be schedule if the Bureau Chief, Construction Bureau determines that such a meeting would aid in the resolution of the claim, otherwise a decision will be made on the claim documentation submitted. If a Level II decision is not rendered within 90 days after receipt of the written appeal, or if the Contractor disputes the decision, an appeal at Level III shall be made in writing to the Bureau Chief, Construction Bureau, within 45 days of the date of the Level II decision. Review of the claim at Level III shall be conducted as a full evaluation of the claim. A claim presentation meeting may be scheduled if the Superintendent of Transportation and Highways determines that such a meeting would aid in resolution of the claim, other a decision will be based on the claim documentation submitted. A Level III final decision will be rendered within 90 days of receipt for appeal.

SPECIAL PROVISION

FOR

PRE-CONSTRUCTION CONFERENCE

After the award of the contract and before construction is started, a conference shall be held at a time and place to be designated by the County.

The purpose of the conference shall be to co-ordinate the work to be performed and adopt a schedule of operations.

The conference will be attended by representatives of the participating agencies together with the public and private agencies whose facilities are involved in the construction of the project.

SPECIAL PROVISION
FOR
CONTRACT EXTRA WORK

Description: Due to the nature of the project, the County may require extra work consisting of various items to be completed by the Contractor where the exact scope of work could not be determined at time of submittal of the bid. In order to avoid project delays or issues related to payment for such extra work, the schedule of quantities includes a Contract Extra Work item.

All work to be performed under this item shall be as directed by the Engineer and approved by the Superintendent and the Cook County Chief Procurement Officer or her designee.

Measurement: Each one dollar of extra work value will be measured as one unit.

Basis of Payment: Payment for this work will be made as specified in Article 109.04 of the Standard Specifications for Road and Bridge Construction and paid as Contract Extra Work in accordance with the requirements set forth in the Special Provision for Processing of Extra Work Payment Requests.

SPECIAL PROVISION
FOR
CONSTRUCTION AIR QUALITY
DIESEL VEHICLE EMISSIONS CONTROL
(GREEN CONSTRUCTION ORDINANCE)

Description. Diesel Vehicle Emissions Control. The reduction of construction air emissions shall be accomplished by using cleaner burning diesel fuel. All equipment on the jobsite as defined by section 30-952 (a) of the Cook County Green Construction Ordinance (ORDINANCE) shall be required to use Ultra Low Sulfur Diesel fuel (ULSD) exclusively (15 ppm sulfur content or less). Equipment shall include any "rental" equipment. In addition, the Contractor is required to comply with section 30-954 -3(c) related to engine idling.

Diesel powered equipment in non-compliance will not be allowed to be used on the project site, and is also subject to adjudication in accordance with the attached Ordinance. Liquidated damages as per section 30-955 (c) of the ORDINANCE will not apply until such time as the level 2 or 3 controls are phased in.

The Contractor is required to submit a list of equipment to be used on the project to the Cook County Department of Environmental Control (DEPARTMENT), as stated in section 30-954(a) and (b) of the ORDINANCE, and shall copy the Cook County Department of Transportation and Highways - Construction Bureau on that submittal. The 30 day submittal stipulation cited in section 30-954(a) of the ORDINANCE will be enforced. The Contractor may not begin work on the project unless acknowledgement by the DEPARTMENT of their receipt of the list is provided to the Construction Bureau of the Cook County Department of Transportation and Highways. At this time, the list will be used for statistical data only. The Contractor is not required to meet portions of the ordinance related to level 2 or 3 controls as outlined in the ORDINANCE until such time as stipulated in the ordinance. If additional equipment is to be used on a project that was not on the original equipment list submitted to the DEPARTMENT, the Contractor must follow the same procedure as outlined above. Short term usage of equipment shall be as stated in section 30-952(3)(c)(1) of the ORDINANCE.

The Contractor shall submit copies of monthly summary reports to the DEPARTMENT and include certified copies of the ULSD fuel delivery slips for diesel fuel delivered to the jobsite for the reporting time period, noting the quantity of diesel fuel used.

The ORDINANCE is attached and made a part of this contract. Contact information for the Department of Environmental Control is given below.

Basis of Payment. Any costs associated with compliance with this special provision and the Green Construction Ordinance shall be considered as included in the contract unit prices bid for the various items of work involved and no additional compensation will be allowed.

Cook County Department of Environmental Control
69 West Washington Street Room 1900
Chicago, IL 60602
Re: Cook County Green Construction Ordinance
Phone: 312-603-8200

09-0-36

ORDINANCE

Sponsored by

THE HONORABLE TODD H. STROGER, PRESIDENT

AND ROBERTO MALDONADO, JOAN PATRICIA MURPHY AND PETER N. SILVESTRI

COUNTY COMMISSIONERS

Co-Sponsored by

THE HONORABLE JOHN P. DALEY, ELIZABETH "LIZ" DOODY GORMAN,

JOSEPH MARIO MORENO, DEBORAH SIMS, ROBERT B. STEELE

AND LARRY SUFFREDIN, COUNTY COMMISSIONERS

COOK COUNTY GREEN CONSTRUCTION ORDINANCE

BE IT ORDAINED, by the Cook County Board of Commissioners that Chapter 30 Environment, Article IX Green Construction, Sections 30-950 through 30-955 of the Cook County Code is hereby enacted as follows:

ARTICLE IX. GREEN CONSTRUCTION

Sec. 30-950. Board of Commissioners findings.

a) Diesel exhaust particle pollution poses a clear and present health risk to the people of Cook County. The United States Environmental Protection Agency has classified diesel exhaust as a likely human carcinogen, and has identified diesel particulate matter and diesel exhaust organic gases as toxic air pollutants. Diesel exhaust is also a prime contributor to airborne fine particle pollution that is linked to premature death and other serious cardiovascular and pulmonary problems such as heart attacks, abnormal heart rhythms, atherosclerosis, stroke, asthma attacks, permanent respiratory damage and retardation of lung growth in children.

b) Cook County is a USEPA designated non-attainment area for fine particulate matter pollution.

c) The health impacts from diesel emissions particularly affect children, the elderly, and people with weakened immune systems.

d) Particularly high concentrations of diesel emissions often occur in heavily traveled transportation corridors, intermodal yards, bus depots, and construction sites; these diesel "hot spots" often are found in densely populated, urban areas, disproportionately impacting ethnic minorities and people of lower economic status.

e) Diesel engine crankcases also are a source of emissions that can seep into the cabin and expose vehicle drivers and passengers to harmful diesel emissions.

f) Diesel exhaust also contains black carbon emissions, which contribute to global climate change.

g) Reduction of diesel emissions can help address these human health and environmental problems.

h) The United States Environmental Protection Agency has enacted requirements over the past few yeas requiring the substantial reduction of emissions from new diesel engines in both heavy duty highway vehicles and land-based non-road equipment. However, these regulations do not apply to any of the over 11 million existing diesel engines in the United States, most of which emit substantially more pollution and often remain in service for 10 to 30 years, depending on the type of engine and equipment.

i) Practical, cost-effective measures to substantially reduce diesel particulate emissions are available today, and can be applied to many existing diesel engines. The same technology that limits diesel pollution from new diesel engines can be retrofitted onto existing engines or applied in new replacement engines to reduce diesel emissions by 85% or better.

j) Therefore, the purpose of this ordinance is to minimize the public health risks from exposure to diesel particulate emissions as expeditiously as practicable.

Sec. 30-951. Definitions.

CARB means the California Air Resources Board.

County, as used in this chapter (with the exception of the use of the words to describe or identify the Government or Board of Commissioners thereof), means all of the territory in the County exclusive of the City of Chicago.

Department means the Cook County Department of Environmental Control.

Fleet means one or more diesel vehicles or mobile or stationary diesel engines owned or operated by the same person or group of related persons.

Heavy duty diesel vehicle means a motor vehicle with a gross vehicle weight rating of at least 8,500 pounds that is powered by a diesel engine.

Level 1 Control means a Verified Diesel Emission Control Device that achieves a particulate matter (PM) emission reduction of 25% or more from uncontrolled engine emission levels.

Level 2 Control means a Verified Diesel Emission Control Device that achieves a particulate matter (PM) emission reduction of 50% or more from uncontrolled engine emission levels.

Level 3 Control means a Verified Diesel Emission Control Device that achieves a particulate matter (PM) emission reduction of 85% or more from uncontrolled engine emission levels, or that reduces emissions to less than or equal to 0.01 grams of PM per brake horsepower-hour. Level 3 Control includes repowering or replacing the existing diesel engine with an engine meeting USE PA's 2007 Heavy-duty Highway Diesel

Standards (66 Fed. Reg. 5002), or in the case of a non-road engine, an engine meeting the USE PA's Tier 4 Nonroad Diesel Standards (69 Fed. Reg. 38958); Level 3 Control also includes new diesel engines meeting said emissions standards.

Motor vehicle means any self-propelled vehicle designed for transporting persons or property on a street or highway, including an on-road diesel vehicle.

Nonroad engine means an internal combustion engine (including the fuel system) that is not used in a motor vehicle or a vehicle used solely for competition, or that is not a stationary source, except that this term shall apply to internal combustion engines used to power generators, compressors or similar equipment used in any construction program or project.

Nonroad Vehicle means a vehicle or equipment that is powered by a nonroad engine, fifty horsepower and greater, and that is not a motor vehicle or a vehicle used solely for competition, which shall include, but not be limited to, excavators, backhoes, cranes, compressors, generators, bulldozers and similar equipment; non-road vehicles do not include locomotives or marine vessels.

Prime Contractor means any person or business entity that enters into a public works contract with Cook County.

Public Works Contract means a contract, budgeted at $2,000,000 or more, with a County agency for a construction program or project bid by Cook County involving the construction, demolition, restoration, rehabilitation, repair, renovation, or abatement of any building, structure, tunnel, excavation, roadway, park or bridge; a contract with a County agency for the preparation for any construction program or project involving the construction, demolition, restoration, rehabilitation, repair, renovation, or abatement of any building, structure, tunnel, excavation, roadway, park or bridge; or a contract with a County agency for any final work involved in the completion of any construction program or project involving the construction, demolition, restoration, rehabilitation, repair, renovation, or abatement of any building, structure, tunnel, excavation, roadway, park or bridge.

Stationary Generators means a non-mobile machine that uses diesel fuel to produce electrical energy.

Subcontractor means any person or business entity that enters into a contract with a Prime Contractor as defined herein to perform work on a public works contract with Cook County.

Ultra low sulfur diesel fuel means diesel fuel that has a sulfur content of no more than fifteen parts per million.

US EPA means the United States Environmental Protection Agency.

Verified diesel emission control device means:

a) an emission control device or strategy that has been verified to achieve a specified diesel PM reduction by US EPA or CARB; or

b) replacement or repowering with an engine that is certified to specific PM emissions performance by USE PA or CARB.

Sec. 30-952. Emission reduction.

a) Immediately after the effective date of this ordinance, any solicitation for a public works contract and any contract entered into as a result of such solicitation shall include a specification that all contractors in the performance of such contract shall use Ultra Low Sulfur Diesel fuel for diesel motor vehicles, nonroad vehicles, and stationary generators used in the performance of the contract.

b) Beginning January 1, 2 014, for Prime Contractors, and beginning January 1, 2016 for Subcontractors, any solicitation for a public works contract and any contract entered into as a result of such solicitation shall include a specification that a Prime Contractor and all Subcontractors in the performance of such contract shall not operate any heavy-duty diesel vehicle in the performance of a public works contract unless that vehicle has installed Level 3 Controls and unless such controls are properly maintained and operating (as provided by regulations promulgated pursuant to this act). Except that, upon provision by the Prime Contractor or Subcontractors to the agency of appropriate and sufficient documentary evidence:

(1) Subsection (b) shall not apply to any heavy-duty diesel vehicle on the construction site working three days or less over the life of the project.

(2) Subsection (b) shall not apply to any heavy-duty diesel vehicle with respect to which the Department makes a written finding that such vehicle cannot be retrofit with Level 3 Controls, in which case such fleet owner or operator shall install Level 2 Controls that are available and appropriate for such vehicle as determined by the Department. If the Department makes a written finding that any such vehicle cannot be retrofit with Level 2 controls, said vehicle shall be retrofit with Level 1 Controls that are available and appropriate for such vehicle as determined by the Department.

(3) Any heavy-duty diesel vehicle that has operational Level 2 Controls installed prior to the effective date of this act shall have an additional one year to meet the requirements of Subsection (b).

c) Within two years after the effective date of this ordinance, any solicitation for a public works contract and any contract entered into as a result of such solicitation shall include a specification that all contractors in the performance of such contract shall not operate any diesel nonroad vehicle in the performance of a public works contract unless that vehicle has installed Level 2 Controls and unless such controls are properly maintained and operating (as provided by regulations promulgated pursuant to this act). Except that, upon provision by the contract or to the agency of appropriate and sufficient documentary evidence:

(1) Subsection (c) shall not apply to any diesel nonroad vehicle on the construction site working three days or less over the life of the project.

(2) Subsection (c) shall not apply to any diesel nonroad vehicle with respect to which the Department makes a written finding that such vehicle cannot be retrofit with Level 2 Controls, in which case such fleet owner or operator shall install Level 1 Controls that are available and appropriate for such vehicle as determined by the Department.

(3) Any diesel nonroad vehicle that has operational Level 1 Controls installed prior to the effective date of this act shall have an additional one year to meet the requirements of Subsection (c).

d) Beginning January 1, 2014, for Prime Contractors, and beginning January 1, 2016 for Subcontractors, any solicitation for a public works contract and any contract entered into as a result of such solicitation shall include a specification that a Prime Contractor and all Subcontractors in the performance of such contract shall not operate any diesel nonroad vehicle in the performance of a public works contract unless that vehicle has installed Level 3 Controls and unless such controls are properly maintained and operating (as provided by regulations promulgated pursuant to this act). Except that, upon provision by the Prime Contractor or Subcontractors to the agency of appropriate and sufficient documentary evidence:

(1) Subsection (d) shall not apply to any diesel nonroad vehicle on the construction site working three days or less over the life of the project.

(2) Subsection (d) shall not apply to any diesel nonroad vehicle with respect to which the Department makes a written finding that such vehicle cannot be retrofit with Level 3 Controls, in which case such fleet owner or operator shall install Level 2 Controls that are available and appropriate for such vehicle as determined by the Department.

(3) Any diesel nonroad vehicle that has operational Level 2 Controls installed prior to the effective date of this act shall have an additional one year to meet the requirements of Subsection (d).

Sec. 30-953. Costs.

All costs associated with meeting these requirements are incidental to the overall contract. No additional time or monies will be granted to the Prime Contractor for compliance with these requirements and any associated regulations.

Sec. 30-954. Compliance.

a) Thirty days before beginning work, the Prime Contractor shall submit to the Department for approval a list of all heavy-duty diesel vehicles, nonroad vehicles, and stationary generators to be used on the project. The list shall include the following:

(1) Prime Contractor and Subcontractor name and address, plus contact person responsible for the vehicles or equipment.

(2) Equipment type, manufacturer, engine model year, engine certification (Tier rating), ECM calibration, horsepower, plate, serial number, and expected fuel usage and/or hours of operation.

(3) For the pollution control technology installed: technology type, serial number, make, model, manufacturer, EPA/CARB verification number/level, and installation date.

b) If the Prime Contractor subsequently needs to bring on site equipment not on the list, the Prime Contractor shall submit the request in writing for prior approval. Additional equipment shall comply with all contract conditions.

c) During periods of inactivity, idling of diesel on road motor vehicles and nonroad vehicles shall be minimized and shall not exceed the time allowed under state and local laws.

d) Any public works contract shall provide for enforcement of the contract provisions required by Section 3 and penalties for noncompliance of such provisions.

Sec. 30-955. Enforcement.

a) Any solicitation for a public works contract subject to the provisions of this section and any contract entered into as a result of such solicitation shall include provisions authorizing independent monitoring and inspection of the Prime Contractor and Subcontractor's compliance with the requirements of this section and requiring that the Prime Contractor and Subcontractor comply with this section. The Prime Contractor shall be liable for a fee of $200 for the review of Prime Contractor and Subcontractor's compliance with the provisions of this section, and the County may withhold and deduct the fee from monies otherwise due the Prime Contractor.

b) All vehicles and equipment to which these requirements are applicable will be subject to random inspections to ensure full compliance with these requirements. If any equipment is found to be non-compliant, the Prime Contractor, Subcontractor or Supplier must remove or retrofit this equipment or vehicle within 24 hours or be subject to liquidated damages pursuant to subdivision (c) of this section until that piece of equipment or vehicle is removed from Project.

c) In the event of a violation of any provision of this section, except as provided, in subdivision (d) of this section, liquidated damages shall be assessed against the Prime Contractor in the amount of $5,000 for each violation (with each piece of noncomplying equipment and each day of noncompliance being a separate violation, not to exceed a total of $50,000 for any one piece of equipment). Said liquidated damages are not imposed as a penalty but as an estimate of the damages that the County will sustain from delay in completion of the work, as well as resultant damages to public health of its citizens, which damages by their nature are not capable of precise proof. The County may withhold and deduct from monies otherwise due the Prime Contractor the amount of liquidated damages due the County.

d) No Prime Contractor or Subcontractor shall make a false statement or claim with respect to any matter material to compliance with the provisions of this section to the County. Any Prime Contractor or Subcontractor making such a false statement shall pay the County up to $10,000 for each such statement as liquidated damages pursuant to the provisions of subdivision (c) of this section.

e) Fees and liquidated damages paid to the County under this section shall be placed in the Cook County Environmental Management Fund.

Sec. 30-956. Regulations.

Within six months of the effective date of this act, the Department shall, after written notice and public hearing, promulgate regulations implementing the provisions of this act.

Effective date: This Ordinance shall take effect upon adoption.

Approved and adopted this 19th day of May 2009.

TODD H. STROGER, President

Cook County Board of Commissioners

Attest: DAVID ORR, County Clerk.

SPECIAL PROVISION
FOR
PROCESSING OF EXTRA WORK PAYMENT REQUESTS

Contractor's payment requests for Extra Work as identified in Article 104.02 of the Standard Specifications and the Special Provision for Contract Extra Work shall be processed in accordance with Article 109.04 of the Standard Specifications and the following additional procedures:

1) Contractor shall invoice the County for such Extra Work in accordance with the lump sum price, unit price, or force account as agreed to by the Engineer and Contractor.

2) Force account billing for equipment expense shall follow the applicable volume of the Equipment Watch Rental Rate Blue Book (Blue Book). Determination of equipment rates shall follow the IDOT Construction Memorandum 08-09. Also, a copy of the Blue Book calculation for each piece of equipment shall be included with the force account billing.

3) Contractor shall submit invoice for such Extra Work after the Extra Work has been fully completed by Contractor within sixty (60) days of completion of the work.

4) Within sixty (60) days after receipt of the invoice, the Engineer will review the Contractor's invoice and determine whether the invoice complies with the above. If the Engineer disapproves the invoice, the Engineer shall give Contractor notice of the reasons for such disapproval and the Contractor shall resubmit a corrected invoice for the Engineer's review. The County shall have an additional thirty (30) days to review and determine whether that the corrected invoice complies with the above.

5) Once the Engineer determines that the invoice complies with the above, the Engineer shall present a recommendation for change in plan for the specific items of extra work. The Superintendent shall execute a change order for the specific items of extra work and submit such change order to the Cook County Chief Procurement Officer, or where appropriate, to the County Board for approval.

6) Within thirty (30) days of the Board's or the Cook County Chief Procurement Officer's approval of the change order, payment shall be reflected under the specific items of extra work completed by the Contractor and the corresponding amount shall be deleted from the Contract Extra Work item.

SPECIAL PROVISION
FOR
ENGINEER'S FIELD OFFICE

This Special Provision amends the provisions of the Standard Specifications for Road and Bridge Construction and shall be construed to be a part thereof.

670.02 Engineer's Field Office Type A. Amend the following of Article 670.02, paragraph 6:

(i) A minimum of two communication paths. The configuration shall include:

(1) Internet Connection. A commercial grade internet service connection using telephone DSL, cable broadband or CDMA wireless technology with a MINIMUM bandwidth of 768 kbs. Additionally, an 802.11 g/N wireless router shall be provided, which will allow connection by the Engineer and up to four Department Staff. All costs related with equipment, installation, maintenance and service shall be included.

The Cook County Department of Transportation and Highways Engineering Computer Division contact person is as follows:

Mo Al-Khouja
Cook County Administration Building
Room 2400
69 West Washington Street
Chicago, Illinois 60602-3007
Work: (312) 603-1753
E-mail: M.Al-Khouja@cookcountyil.gov

(2) Telephone Lines. Three separate telephone lines with voicemail shall be provided.

(j) One digital copy machine with an automatic feed tray storing at least 30 sheets of paper, capable of reproducing prints as black lines on white paper up to 11 x 17 in. (280 x 432 mm) in size. Reproduction paper (8.5 x 11 in., 8.5 x 14 in., and 11 x 17 in.) shall be supplied to the satisfaction of the Engineer. Maintenance, activating agent and power source for the copy machine shall be included.

The digital copy machine shall also be capable of scanning to / printing from a computer and faxing over a telephone line. All cables, support equipment, software, installation and technical support required to make and keep the equipment operational for up to four computers shall be included.

The digital copy machine, software and support equipment must be compatible with the most current version of Windows operating system.

(k) One electric hot and cold water dispenser. 5 gallon and 0.5 liter bottles of water shall be supplied to the satisfaction of the Resident Engineer.

(l) One electric paper shredder capable of shredding a minimum 15 sheets at a time.

670.02 Engineer's Field Office Type A. Add the following to Article 670.02, paragraph 6:

(m) Three (3) new cellular phones with the capacity for both cellular call and two (2) way communication (Nextel or equal), established voice mail, hands free adaptors, belt clips and car adaptors. These cellular phones will be for exclusive use by the Engineer and the Engineer's support staff. All of the cellular phones and services must be compatible with each other. Maintenance and operating costs of the cellular phones shall be included.

(n) One digital camera with 8 megapixel minimum resolution, batteries to operate the camera, USB cable, minimum 8 GB memory card and digital camera case.

(o) A new upright bagless vacuum cleaner with a hepa-filter or new shop vacuum with a Hepa-Filter and any miscellaneous cleaning supplies necessary for the Engineer to maintain the Field Office.

A weekly cleaning service for the field office shall be provided.

(p) The following items are suggested office and field supplies. These items are subject to revision by the Resident Engineer, must be coordinated with the Resident Engineer prior to purchase, and shall be furnished to the satisfaction of the Resident Engineer prior to commencement and for the duration of the project.

If no pay item for Engineer's Field Office is included in the contract or used by the Department, the following items shall be incidental to the contract.

These items will not be returned at the conclusion of the contract.

OFFICE:

Adjustable Hole Punch, Black (3-Hole)	1 Each
Bankers Box, Legal size With String and Button Closure	4 Pack
Binder Clips, Large, 2", Box of 12 Each	2 Each
Binder Clips, Medium, 1 ¼", Box of 12 Each	2 Each
Binder Dividers, Avery index marker or equivalent	1 Each
Binder, Black 1" Capacity	1 Each
Binder, Black, 1-1/2" Capacity	2 Each
Binder, Black, 3" Capacity	1 Each
Calendar, At-A-Glance 3-Month Wall or equivalent	1 Each
Calendar, At-A-Glance Compact Desk Calendar Base and Calendar Refill	1 Each

3" x 3 ¾" or equivalent	
Clipboard, Legal	2 Each
Correction Fluid, Multipurpose, White	1 Each
DVD Cases, Slim Line, 25 Count	1 Pack
DVD Discs, R.W., 25 Count	1 Pack
Folders, Manila 250 Count Letter 1/3 Cut File	1 Box
Highlighters, Assorted Fluorescent Colors, 4 Count	1 Pack
Labels, Multipurpose White 500 Count, 3/4" x 1 ½"	1 Pack
Letter Trays, Stackable, Pack of 6	1 Each
Markers, Large, Permanent, Black	12 Each
Markers, Sharpie, Black or equivalent	12 Each
Memory Card, 2 Gig SD for Digital Camera	1 Each
OIC, Ideal Clamps, Small Box of 50	2 Each
Paper Clips, Jumbo No. 1, Regular, Box of 100	2 Each
Paper Clips, No. 1, Regular, Box of 100	2 Each
Paper, Quadrille Pad, 8 ½" x 11"	6 Each
Paper, Standard Canary Letter Pads, 6 Count, 8 ½" x 11 ¾"	1 Pack
Pen, Black	2 Pack
Pen, Red	1 Pack
Pencil, Lead Refill, 0.5 mm, Tube of 12	2 Each
Pencils, Disposable	2 Pack
Pencils, Color (Green)	1 Pack
Pencils, Color (Orange)	1 Pack
Pencils, Color (Red)	1 Pack
Pencils, Color (Yellow)	1 Pack
Pencils, Pentel Forte or equivalent, Automatic Pencil, 0.5 mm	3 Each

Pencils, Zebra Rubber Sharpo Mechanical Pencil or equivalent	2 Each
Post-It Memo Cubes, 3 7/8" x 3 7/8", Cube of 300 Sheets	1 Each
Post-It Notes, Yellow, 12 Count 3" x 3"	1 Pack
Rubber Bands, #16, 1 lb., 2 " x 1/16"	1 Each
Rubber Bands, #32, 1 lb., 3" x 1/8"	1 Each
Scissors, Deskwork's or equivalent	1 Each
Staple Remover, Pinch Type	1 Each
Stapler, Black Deluxe Standard	1 Each
Tape Dispenser	1 Each
Tape, Transparent Refills ¾"	6 Each

FIELD:

Ruler, 6 ft., inch/tenth	6 Each
Tape, 100 ft., Fiberglass with Handle	1 Each
Tape, 25 ft. inch/tenth, Retractable, Lufkin or equivalent	2 Each
Wheel, Measuring English	1 Each

The estimated cost for office and field supplies shall be as follows:

Bid Amount		Approximate Cost
Up to	$1,000,000	$ 625
$1,000,000	$3,000,000	$ 750
$3,000,000	$5,000,000	$ 875
Over	$5,000,000	$1,000

SPECIAL PROVISION
FOR
CONSTRUCTION DEBRIS

Add the following to the third paragraph of Article 202.03 of the Standard Specifications:

"The Contractor shall not conduct any generation, transportation, or recycling of construction or demolition debris, clean or general or uncontaminated soil generated during construction, remodeling, repair, and demolition of utilities, structures, and roads that is not commingled with any waste, without the maintenance of documentation identifying the hauler, generator, place of origin of the debris or soil, the weight or volume of the debris or soil, and the location, owner, and operator of the facility where the debris or soil was transferred, disposed, recycled or treated. This documentation must be maintained by the Contractor for 3 years."

SPECIAL PROVISION
FOR
CLEAN CONSTRUCTION AND DEMOLITION DEBRIS

In accordance with the State of Illinois Environmental Protection Act, the Cook County Department of Transportation and Highways (the Department), as "Site Owner" at the subject highway improvement location, is required to certify that all materials to be taken to an uncontaminated soil fill location, including uncontaminated soil and clean construction and demolition debris, are to be certified as uncontaminated soil.

The Department has performed sufficient testing at the site and has determined that soils to be excavated per the plans as well as existing concrete and asphalt pavement materials meet the criteria to be considered clean construction and demolition debris. Exceptions are listed below*. In accordance with the Act, the certification is made per IEPA Form LPC-663. A copy of the completed Form LPC-663 has been attached to this special provision. The original form is available from;

Ms. Holly Cichy
Chief Engineer of Construction
Cook County Department of Transportation and Highways
69 W. Washington St., 23rd Floor
Chicago, IL 60602
(312) 603-1613

The Contractor is expected to be thoroughly familiar with the provisions of the Environmental Protection Act as it relates to proper disposal of excavated material and construction debris. Should the Contractor choose to dispose of surplus soil material at a registered uncontaminated soil fill location, this form must be submitted to the operator of that location before any materials can be disposed of at that site. The Contractor should be advised that, even with the submittal of the properly executed Form LPC-663, the fill operators retain the right to reject any or all loads from a particular construction site based on their own determination of the suitability of material from that site. Each certification covers only material from that specified job site. The Contractor shall take care not to stockpile or mix together material from different sites before taking that material for disposal.

This special provision is not to be construed as a requirement that obligates the Contractor to dispose of surplus material at a registered uncontaminated soil fill location.

* Based on the Department's investigation and location history including the possible determination of a LUST site or other risk indicators, it has been determined that materials excavated at the following locations may not meet the Clean Construction and Demolition Debris requirements:

*** LOCATIONS TO BE LISTED, IF APPLICABLE**

This Special Provision will modify Article 669 of the Standard Specifications as follows:

The Contractor is advised to consider the cost of disposing of all clean construction and demolition debris as delineated herein and reflect those costs in their bids for **EARTH EXCAVATION** or other appropriate items which may include soils removal. Pay items for **NON-SPECIAL WASTE DISPOSAL**, **SPECIAL WASTE DISPOSAL**, **HAZAROUS WASTE DISPOSAL** and **SPECIAL WASTE PLANS AND REPORTS** have been included in the Summary of Quantities in order to provide for the disposal of materials in those

locations listed above. The requirements for removal and disposal of such materials shall be in accordance with Article 669.

SPECIAL PROVISION
FOR
DOWEL BARS

Revise the fifth and sixth sentences of Article 1006.11(b) of the Standard Specifications to read:

"The bars shall be epoxy coated according to AASHTO M 284, except the thickness of the epoxy shall be 7 to 12 mils (0.18 to 0.30 mm) and patching of the ends will not be required. The epoxy coating applicator shall be certified according to the current IDOT Bureau of Materials and Physical Research Policy Memorandum, "Epoxy Coating Plant Certification Procedure". The Department will maintain an approved list."

Basis of Payment. Dowel Bars required for Pavement Patching or placement of P.C. Concrete Pavement will NOT be paid for separately. The cost of the dowel bars will be included in the cost for the respective pavement replacement item. Contraction joints requiring the use of dowel bars will be located at the direction of the Engineer and placed in accordance with the applicable Illinois Department of Transportation Standard or Specification as well as any other note, detail or standard contained in the project plans and specifications.

SPECIAL PROVISION
FOR
DIAMOND GRINDING CONCRETE PAVEMENT

Description. This work involves grinding an existing PCC pavement surface for profile improvement, for use as a traffic surface, using a diamond grinder. Grinding and texturing shall be performed at the locations shown in the contract documents.

Grinding shall not extend across bridges unless specifically designated.

Equipment. Grinding operations will utilize diamond blades mounted on a self propelled machine designed for grinding and texturing pavement. The equipment shall be such that it will not cause strain or damage to the underlying surface of the pavement. Grinding equipment that causes ravels, aggregate fractures, spalls, or disturbance to the transverse or longitudinal joints will not be permitted. Vacuuming equipment for removal of residue and excess water shall be used. The equipment will have a positive means of extracting the slurry material from the pavement and for preventing dust from escaping into the air.

Preconstruction Information. Prior to construction a set of cores from within the project limits may be available for the contractor to examine and perform any tests on. The cores may be available at the Cook County Department of Transportation and Highways Maintenance District 3, Material Testing Office.

Construction. Pavement surface repair (diamond grinding) shall consist of grinding and texturing the entire surface of the pavement in a longitudinal direction. The area ground shall not be left slick or polished. Substantially the entire surface area of the pavement shall be ground and textured until the pavement surface on both sides of the transverse joints and all cracks are in the same plane and meet the smoothness required. In each lane, at least 95 percent of the area in each 100 foot section shall have a newly ground surface. Except at joints and cracks, grinding shall not exceed ½ inch in depth. The ground surface shall be of uniform texture.

Grinding shall be discontinued when there is danger of water freezing.

Reflective Pavement Markers (RPM) are to be removed prior to the grinding operation. New RPM will be installed after completion of the grinding. Pay items have been included for removal and installation of RPM.

For multiple passes, the equipment shall be carefully controlled to minimize the overlap. Overlaps shall not exceed approximately 1 inch.

When more than one grinding machine is used in the same travel lane, the blade segment thickness, blade spacings, and blade diameter shall be similar so that the texture of the ground surface is reasonably uniform across the lane.

Grinding shall result in a parallel corduroy type texturing consisting of grooves between 2 millimeters and 3 millimeters wide. The distance between grooves shall be between 2 millimeters and 3 millimeters. The peaks of the ridge shall average approximately 2 millimeters higher than the bottom of the grooves. The finished texture shall be uniform. The transverse slope of the pavement shall be uniform to a degree that no depressions or misalignment of slope grater than 3 millimeters in 3 meters exists when tested with a 3

meter straightedge. Straightedge requirements do not apply across longitudinal joints or outside ground areas. Adequate cross slope drainage must result after grinding so that no ponding of water exists.

When included as part of the contract; Pavement patching (including pavement replacement for drainage and utilities), curb and gutter removal and replacement, median removal and replacement, structure adjustments, dowel retrofit, pavement widening and removal of raised reflective pavement markers shall all be done prior to diamond grinding. Joint sealing, reinstallation of raised reflective pavement markers, replacement of survey markers or monuments and permanent pavement striping must be done after diamond grinding. The Engineer will direct the timing of work for detector loop installation.

Limitations. Lane closures necessary to accomplish this work shall be shown in the contract documents, or as directed by the Engineer. The entire roadbed shall be opened to traffic at the end of the working period. Uncompleted sections may be opened to traffic without completion of grinding across an entire lane.

Removal of all slurry or residue resulting from the grinding operations shall be continuous and shall not be deposited on the slab or shoulder. Pavement and paved shoulders must be left in a clean condition.

Disposal of grinding residue shall meet the following requirements:

1) At no time will the grinding residue be allowed to enter a closed drainage system. The Contractor is responsible for providing suitable means to restrict the infiltration of the grinding residue into the closed drain system at no additional cost.

2) The Contractor will be responsible for hauling the grinding residue to a suitable location at no additional cost.

3) Residue will not spread within 30 meters of any natural stream or lake.

4) Residue will not spread within 1.5 meters of a water filled ditch.

5) The spread rate will not generate surface runoff. The Contractor will haul the grinding residue to a suitable location when surface runoff occurs at the grinding location at no additional cost.

6) Residue shall not be permitted to flow across lanes occupied by public traffic.

The Contractor shall obtain approval of the spreading/disposal method from the Engineer prior to beginning the grinding operation.

Pavement Markings. Temporary Pavement Marking Tape, Type III Line shall be installed on the pavement according immediately after permanent markings have been ground away. This is required on a daily basis when diamond grinding operations occur. Temporary pavement markings shall be installed according to Section 703 of the Standard Specifications for Road and Bridge Construction.

Measurement and Payment.

Diamond Grinding Concrete Pavement will be measured by area in square yards. Pay areas will include the final textured surface area. Minor areas of untextured pavement will be included in the measurement. Minor areas shall total no more than 5 percent of the designated area to be textured.

The work of collection, hauling and spreading of the grinding residue is included in the contract unit price for Diamond Grinding Concrete Pavement. Payment for additional passes or regrinding to meet ride quality requirements will not be paid for separately.

The completed work as measured for Diamond Grinding Concrete Pavement will be paid for at the contract Unit Bid Price per Sq. Yd. of Diamond Grinding Concrete Pavement.

The cost for Temporary Pavement Marking Tape, Type III Line will be considered incidental to the cost of Traffic Protection.

SPECIAL PROVISION
FOR
CRACK ROUTING AND SEALING

The following crack preparation and sealing material will be used:

Materials. The material will conform to ASTM Specification 3405 and Federal Specification SS-S-1401C.

Sealant Equipment. Equipment used to melt and dispense the Rubberized Asphalt will be designed for that purpose. The material will be melted in a double boiler, oil-jacketed melter; equipped with a mechanical agitator, which will be in continuous use while the unit is in operation.

Routing and Cleaning of Cracks and Joints. No crack or joint less than 1/4 inch in width will be routed, cleaned or sealed without the permission of the Engineer. Those cracks and/or joints greater than 1/4 inch will be routed to a depth of 3/4 inch using suitable routing equipment. All cracks and joints will be blown clean with 90 p.s.i. of oil-free, compressed air.

Placing of Sealant. Immediately prior to placing the sealant, all cracks and joints will be dry. Care will be exercised to ensure that the final bead of sealant will be flush or slightly recessed when cured on the day following placement.

Touch-Up Work. If the application is not successful, for any reason, the contractor will be required to rout, clean and reseal all areas that have failed. This work will be done at the contractor's expense.

Method of Measurement and Basis of Payment. The cleaning and filling of cracks will be paid for per Foot for Crack Routing and Sealing which will include all materials, equipment, labor and traffic control as required to complete the work.

Schedule of Work. This work will take place after the placement of the final lift of Hot-Mix-Asphalt Surface. The need for crack sealing and the locations for this work will be determined by the Engineer. Some of this work may be required before the project completion date specified in the Contract. However, some or all of the work may be required after the contract completion date, typically, in the next calendar year to repair reflective cracks.

SPECIAL PROVISION
FOR
SURVEY MONUMENTS

Description. The Contractor shall cause all work necessary to be performed for the preservation, relocation and erection of Survey Monuments at all points hereinafter described. Installation shall be made in accordance with the details shown on plans.

Survey Monuments. All section, quarter section or other government established corners which are discovered or known to exist within the limits of the proposed improvement are to be re-established (as later specified) in accordance with the details shown on the Standard Design for Cook County Survey Monuments. All section corners located within the project limits or as called out on the plans will be located by a Registered Land Surveyor and a physical monument installed at the located corner in accordance with the details specified below. This will be done even if an existing monument is not found at that corner.

Placing Monuments. When monuments are located within the limits of the proposed improvements, they shall not be disturbed by the Contractor until a Registered Land Surveyor shall have made such reference as may be necessary to preserve their location. After the pavement is laid, the original location of the monuments shall be identified by placing in position, vertically above or below the original location, the new monuments which shall comply with details shown on the Standard Designs. In case monuments do not fall within the limits of the pavement, the monument shall be placed in a 2-1/2 inch wrought iron pipe, 3 feet long, driven flush with the ground surface and grouted as shown on the aforesaid Standard design. The plugs for this purpose shall be furnished by a Registered Land Surveyor and shall be set securely and in a workmanlike manner flush with the surface of the ground or pavement in accordance with the requirements of the law and under the direction of a Registered Land Surveyor. When section corners without existing monumentation are located within the project limits or as specifically directed in the plans, that corner shall be located and monumented as described above.

Plat. The location of all monuments to be preserved, reset or erected within the limits of the improvement shall be shown on a plat or plats which delineates and describes each corner monument. Preparation of the above plat must conform with Illinois Public Act 79-649, entitled "An Act to provide for the perpetuation of land survey Monuments". Each plat shall be recorded by the Surveyor in the office of the County Recorder. Copies of the plat or plats, as recorded and bearing the appropriate document number, shall be furnished to and become the property of the Cook County Department of Transportation and Highways (one copy to the Pavement Geometrics Division - Survey Section and one copy to the Right of Way Bureau).

Basis of Payment. This work will be paid for at the contract unit price each for Survey Momuments, relocated and erected within the limits of the improvement or as specifically directed in the plans, which price shall include the cost of all labor, tools and materials used in the performance of preserving, relocating and identifying the monuments, as well as the salary and expense of the Registered Land Surveyor while engaged in this work.

SPECIAL PROVISION
FOR
CRUSHED STONE (TEMPORARY USE)

Description. This work shall consist of furnishing and placing crushed stone for temporary use to provide and maintain ingress and egress to abutting properties during construction operations. It shall be used for access to intersecting roadways, alley returns, crosswalks and other places required by the Engineer. The crushed stone or gravel shall have a gradation of CA6 or CA10 conforming to Article 1004.01 of the State Standard Specifications. Excess materials recovered from the job site such as bituminous grindings and sub-base granular materials from existing pavements may be utilized at the discretion of the Engineer.

Basis of Payment. This work will be paid for at the Lump Sum for Crushed Stone (Temporary Use). An estimated quantity may be given in the plans for informational use only. The Lump Sum payment shall include furnishing, transporting, placing, maintaining, reusing and the ultimate disposal of the Crushed Stone (Temporary Use) as herein specified or as directed by the Engineer.

SPECIAL PROVISION
FOR
P.C. CONCRETE SURFACE FINISH

All P.C. Concrete Pavement shall have a Type B final finish as specified in Article 420.09 (e)(2) of the Standard Specifications.

SPECIAL PROVISION
FOR
TRAFFIC BARRIER TERMINAL, TYPE 1, SPECIAL

Description. This work shall consist of furnishing and installing a tangent type Traffic Barrier Terminal, Type 1, Special according to Section 631 of the Standard Specifications and the following:

The terminal and required shoulder area shall conform to Sheet No. 1 of I.D.O.T. Standard No. BLR23-4. Tapering of the terminal, as shown on the standard, is required in order to offset the extruder head and eliminate encroachment on the highway pavement of curb.

The terminals at a single location within a project shall be of the same manufacture and configuration and shall be identical in design and appearance.

Materials and Construction Requirements for Direct Applied Reflectorized Terminal Marker.

Direct Applied Reflectorized Terminal Markers shall be fabricated using Types AP or ZZ reflectorized sheeting. All materials used shall meet the applicable requirements of Sections 1090 and 1091 of the Standard Specifications.

The sheeting shall be uniform in color throughout and conform to the latest appropriate standard color tolerance chart issued by the U.S. Department of Transportation, Federal Highway Administration.

Direct Applied Reflectorized Terminal Markers shall be installed directly to the guardrail terminal end. The surface of the guardrail terminal end shall be cleaned of all contaminants prior to the installation of the terminal marker. The surface shall be cleaned using a 5-8 percent phosphoric acid solution and rinsed with clean water or as recommended by the manufacturer of the direct applied terminal marker sheeting and as approved by the Engineer.

Direct Applied Reflectorized Terminal Markers shall conform to the terminal marker details as shown on I.D.O.T. Standard No. 635006-03.

Basis of Payment. This work will be paid for at the contract unit price each for Traffic Barrier Terminal, Type 1, Special which price shall include furnishing and installing all parts and materials, foundations, transitions, tapers, delineations and any excavation or backfilling required. The cost of furnishing and installing Direct Applied Reflectorized Terminal Markers shall be considered as included in the contract unit price for Traffic Barrier Terminal, Type 1, Special. The cost for Hot-Mix-Asphalt shoulders will be paid separately.

SPECIAL PROVISION
FOR
CUTTING HOT-MIX ASPHALT SURFACE

Description. This work shall consist of the cutting of the hot-mix asphalt surface wherever indicated and to the depth as shown on the plans and as required by the Engineer.

The hot-mix-asphalt surface shall be cut to a straight line and a vertical plane by a method approved by the Engineer.

It shall be the responsibility of the Contractor to determine the thickness of the existing hot-mix-asphalt surface course as well as underlying pavement layers as may be impacted by the required cutting. No additional compensation will be allowed because of variations from the assumed thicknesses or from the thicknesses shown on the plans.

Basis of Payment. This work will be paid for at the Contract Unit Price per Foot for Cutting Hot-Mix Asphalt Surface.

SPECIAL PROVISION
FOR
HOT-MIX-ASPHALT DRIVEWAY SURFACE REMOVAL

Description. This work shall consist of the removal and satisfactory disposal of the hot-mix-asphalt driveway surface course wherever indicated on the plans and as required by the Engineer.

The existing hot-mix-asphalt driveway surface shall be removed to the depth as shown on the plans or as directed by the Engineer.

This work shall immediately precede the construction of the work for which the removal is required.

Equipment and methods used for removing the driveway surface shall be such as to prevent cracking, shattering or spalling and to provide a straight line cut and vertical plane at the limits of the removal area when adjacent to driveway or parking lot surface remaining in place. The equipment used to remove the material shall be approved by the Engineer.

If the bituminous driveway surface material being removed is to be used in embankment, it shall conform to and be placed and compacted in accordance with Section 205. If all or part of this material is to be disposed of outside the right of way, it shall be disposed of by the Contractor at his expense and in accordance with Section 202.

Basis of Payment. This work will be paid for per Square Yard for Hot-Mix-Asphalt Driveway Surface Removal which shall include all labor, equipment and disposal of the material removed. In addition, any temporary ramps or butt joints which may be required to maintain access to adjacent properties or sidewalks, as directed by the Engineer, will not be paid for separately, but will be included in the cost of this item.

SPECIAL PROVISION
FOR
TEMPORARY BUTT JOINTS

Description. Immediately after the removal of the existing hot-mix-asphalt surface, Temporary Butt Joints shall be constructed at the saw cut limits of removal. The Butt Joints are to be constructed with Hot-Mix-Asphalt Surface Course or Leveling Binder and compacted as directed by the Engineer. A coated paper bond breaker shall be placed between the Butt Joint and the existing surface.

The Butt Joints shall be removed and the exposed surfaces primed just prior to the placement of the specified Hot-Mix-Asphalt paving material.

Temporary Butt Joints shall be measured in Feet (Meters).

Basis of Payment. The cost of constructing and removing the Butt Joints shall be paid for at the Contract Unit Price per Foot (Meter) for Temporary Butt Joints.

SPECIAL PROVISION
FOR
TREATMENT OF CRACKS

Prior to placing leveling binder, binder course or surface course mixtures, as specified, on milled or unmilled surfaces to be resurfaced, all cracks shall be pneumatically cleaned and free of dirt, water, vegetation and loose material and then sealed to the satisfaction of the Engineer.

Small cracks less than 1/2 inch (13mm) width shall be filled in accordance with Section 451. This preparation and treatment of the existing milled or unmilled pavement, as called for in the plans, shall be paid for at the contract unit price per pound (kilogram) for CRACK FILLING. Crack routing will not be required, and the Contractor will not be paid for this item.

Cracks 1/2 inch (13mm) or greater in width shall be primed, filled with Mixture for Cracks, Joints and Flangeways conforming to that specified in Article 406.05 and compacted by use of a vibratory roller. Cracks that remain in a heaved condition shall be resettled by use of vibratory roller. If the heaved condition cannot be settled, it shall be milled flat to the satisfaction of the Engineer. The Engineer may waive the vibratory roller equipment if the Contractor can obtain satisfactory results with other rollers designated in Article 1101.01. This preparation and treatment of the existing milled or unmilled pavement, as called for in the plans, shall be paid for at the contract unit price per ton for MIXTURE FOR CRACKS, JOINTS AND FLANGEWAYS.

SPECIAL PROVISION
FOR
MANHOLES TO BE RECONSTRUCTED, SPECIAL
CATCH BASINS TO BE RECONSTRUCTED, SPECIAL
VALVE VAULTS TO BE RECONSTRUCTED, SPECIAL

Description. Where conditions warrant that more than 30 inches of a structure must be removed and reconstructed for reasons other than a change in grade, this Special Provision shall prevail. Work shall otherwise conform to the applicable requirements of Article 602 of the State Specifications.

The limits of special reconstruction will vary from structure to structure within the project limits, but shall consist of the removal and replacement of at least the top 30 inches of the existing structure. This work shall be done at the direction of the Engineer and be in accordance with Cook County design standards for the appropriate type structure.

Those structures to have special reconstruction have been designated by (RS) in the plans. A quantity of storm sewer for the replacement of laterals has been included in the Summary of Quantities.

Basis of Payment. This work shall be paid for at the contract unit price each for Manholes to Be Reconstructed, Special; Catch Basins to be Reconstructed, Special; or Valve Vaults to be Reconstructed, Special which price shall include all labor, materials, excavation and backfill.

SPECIAL PROVISION
FOR
LIDS AND FRAMES AND LIDS

Description. Where the term lids is used in the Summary of Quantities, on County Transportation and Highways Standards and in the Plans, it shall be considered synonymous with the term grates and be subject to the provisions of Article 604 of the State Standard Specifications for Road and Bridge Construction.

Basis of Payment. This work shall be paid for at the contract unit price each for Lids and for Frames and Lids of the type specified, which price shall include the cost of the mortar bed.

SPECIAL PROVISION
FOR
FRAMES AND LIDS TO BE ADJUSTED, SPECIAL

Description. This work shall consist of the stage adjustment of frames and lids or grates of existing drainage and utility structures within the pavement area where the existing bituminous surface is to be removed. All work shall be in accordance with the applicable portions of Section 353, 406 and 603 of the Standard Specifications, at the locations shown in the plans or as designated by the Engineer and as herein specified.

Materials and Construction Methods. Stage I shall consist of a minimum twelve-inch (12 inch) wide removal of the pavement area around the structure; lowering of the existing frame to the elevation of the milled pavement surface; and backfilling with six-inch (6 inch) thick compacted bituminous material approved by the Engineer.

Stage II shall consist of removing the bituminous material, adjusting the frame to its final surface elevation and the replacement of the removed bituminous material with P.C. Concrete and/or Bituminous Concrete Material, meeting the requirements of Sections 353 and/or 406 of the Standard Specifications with the exception Bituminous Binder will not be allowed where Type 5 frames are encountered.

In lieu of lowering the existing frames with closed lids, the Contractor may remove and store the frame and lids and cover the existing structure with a one-half inch thick metal plate, flush with the milled surface, which will remain the property of the Contractor upon its replacement with the existing frame and lid.

Basis of Payment. This work will be paid for at the contract unit price each for Frames and Lids to be Adjusted, Special, which price shall be payment in full for adjusting the structure as herein required.

Existing broken frames or lids shall be removed and disposed of by the Contractor and shall be replaced as directed by the Engineer. Replacement frames and lids will be paid for in accordance with Article 109.04 of the Standard Specifications unless a separate pay item has been provided.

The adjustment of privately owned utility structures is not a part of this contract and will be done by the respective owners. On all Metropolitan Sanitary District structures, only P.C. Concrete Precast Rings shall be used for adjusting frames.

For projects located in the City of Chicago, the temporary placement of asphalt or steel plates over existing valve vaults is strictly prohibited. Access to these structures must be preserved at all times during the construction period. Adjustment of these valve vault structures in the City of Chicago will not be performed according to this special provision.

SPECIAL PROVISION
FOR
FLARED END SECTIONS TO BE REMOVED, FLARED END SECTIONS TO BE RELOCATED

Description. This work shall consist of the removal of existing concrete flared end sections to be either reinstalled at a specified location or disposed of properly. Where flared end sections are to be relocated, care shall be taken so as not to damage the existing flared end section or the existing pipe culvert during removal and transportation. The existing mortar or mastic shall be removed from the end section prior to its reuse to insure that a properly sealed joint results following reinstallation. The resulting disturbed ditch area shall be regraded appropriately according to the plans including restoration with seeding or sodding. Any damages incurred to the existing pipe culvert or flared end section as a result of this work shall be the full responsibility of the Contractor. Damaged pipe culverts or flared end sections shall be replaced and installed at the Contractor's expense. All work shall be performed at the direction of the Engineer.

Basis of Payment. This work shall be paid for at the contract unit price each for Flared End Sections to be Removed (IN. DIA. RCCP) and Flared End Sections to be Relocated (IN. DIA. RCCP) of the size specified. This price shall include the cost of all labor, materials and equipment necessary to perform this work in addition to all disposal costs.

SPECIAL PROVISION
FOR
PAVEMENT REPLACEMENT

Description. This work shall consist of the removal and replacement, and any necessary excavation and embankment of all surface, base course, and subbase as shown on the plans. Where all of the pavement, including subbase, base and surface course, is to be replaced, the item will be specified as "Pavement Replacement". If only surface course, binder course, cushion and joint filler is to be replaced, the item will be specified as "Pavement Replacement - Surface Course". The term "excavation" or "embankment" as used in this Article refers only to that necessary for the preparation of the subgrade, where the "Pavement Replacement" is full depth.

Materials. Materials shall meet the requirements of Division 1000 - Materials.

Construction Requirements.

General. All base, surface courses or subbase removed shall be restored to the original cross section. The elevation of the surface of the replaced surface course shall not vary more than 1/8 inch (3 mm) from the elevation of the surface of the adjoining surface course. The subgrade in the case of surface, base course and subbase removal, and the cushion or filler on the base course in the case of surface course removal, shall be adjusted so that this result will be obtained. Pavement damaged by reason of construction operations outside of the working limit of 2 feet (600 mm) from the form line specified shall be replaced by the Contractor at his/her own expense.

Portland Cement Concrete Base and Surface Courses. Portland cement concrete base or surface courses or natural cement concrete base or surface courses which are removed shall be replaced with portland cement concrete base or surface courses meeting the requirements of Sections 353 and 420, respectively, except that hand methods of consolidating and finishing will be permitted.

Brick, Granite Block and Wood Block Surface Courses. Brick, granite block or wood block surface courses which are removed shall be replaced if specified on the plans or directed by the Engineer. Whole sound brick, granite blocks or wood blocks taken from the original surface course shall be used in the replacement. If additional brick, granite blocks or wood blocks are required, the Contractor shall furnish a similar type and size to those which are being replaced. Brick, granite block or wood block surface course shall be laid on a sand or limestone screenings cushion approximately 1 inch (25 mm) thick, and shall have the joints filled with asphalt. The surface or base, may be restored to the proper elevation by use of an approved compacted bituminous material or air-entrained portland cement concrete.

Bituminous Surface and Binder Courses. Bituminous surface and binder courses which are removed shall be replaced by an equal thickness of bituminous materials meeting the requirements of Section 406. The type used shall be that which closely conforms to the type which was removed, and shall be approved in writing by the Engineer.

Gravel or Crushed Stone Base and Surface Courses. Gravel or crushed stone base and surface courses which are removed shall be replaced by an equal thickness of materials meeting the requirements of Section 351 or Section 402. The type used shall be that which closely conforms to the type which was removed and shall be approved in writing by the Engineer.

Base and Subbase Replacement. All granular or stabilized base and subbase which are removed shall be replaced with an equal compacted thickness of material which closely conforms to the original material removed and shall be compacted to the density requirements of the granular or stabilized base and subbase removed.

Disposal of Surplus Material. Surplus or waste material resulting from the removal and replacement operations shall be disposed of by and at the expense of the Contractor according to Article 202.03.

Method of Measurement. Pavement Replacement and Pavement Replacement - Surface Course, will be measured in place, and the area computed in square yards (square meters). Pavement or surface course damaged by reason of construction operations outside of the working limit of 2 feet (600 mm) from the form line specified will not be measured for payment.

Basis of Payment. This work will be paid for at the contract unit price per square yard (square meter) for Pavement Replacement or Pavement Replacement – Surface Course, which prices shall include any required earth excavation or embankment described herein.

SPECIAL PROVISION
FOR
COOPERATION WITH UTILITIES

This special provision amends the provisions of Article 105.07 of the Standard Specifications and includes a section clarifying the utility information provided in the plans and specifications.

105.07 - Cooperation with Utilities. Revise the last paragraph regarding (a) known Utilities to read:

> "No additional compensation will be allowed for any delays, inconveniences, or damage sustained by the Contractor due to any interference from the said utility appurtenances or the operation of moving them either by the utility company or by him; or on account of any special construction methods required in prosecuting his work due to the existence of said appurtenances either in their present or relocated positions."

105.07 - Cooperation with Utilities. Delete subarticle 105.07 (b) Unknown Utilities and substitute the following:

(b) Unknown Utilities. The requirements stated above for known utilities shall apply to unknown utilities.

Examination of Plans, Specifications, Special Provisions and Site of Work.

The bidder shall, before submitting a bid, carefully examine the provisions of the contract. The bidder shall inspect in detail the site of the proposed work, investigate and become familiar with all the local conditions affecting the contract and fully acquaint themselves with the detailed requirements of construction. Submission of a bid shall be a conclusive assurance and warranty the bidder has made these examinations and the bidder understands all the requirements for the performance of the work. If his/her bid is accepted, the bidder shall be responsible for all errors in the proposal resulting from his/her failure or neglect to comply with these instructions. The Department will, in no case, be responsible for any costs, expenses, losses, or change in anticipated profits resulting from such failure or neglect of the bidder to make these examinations.

The bidder shall take no advantage of any error or omission in the proposal and advertised contract. Any prospective bidder who desires an explanation or interpretation of the plans, specification, or any of the contract documents shall request such in writing from the Department, in sufficient time to allow a written reply by the Department that can reach all prospective bidders before the submission of their bids. All information and changes made to the contract will be communicated through an addendum. Only changes made through the addendum will be binding to the Department. When the plans or special provisions include information pertaining to the location of underground utility facilities, such information represents only the opinion of the Department as to the location of such utilities and is only included for the convenience of the bidder. The Department assumes no responsibility whatever in respect to the sufficiency or the accuracy of the information shown on the plans relative to the location of underground utility facilities. It shall be the Contractor's responsibility to determine the actual location of all such facilities including field verification of both vertical and horizontal locations relative to the work. He shall also obtain from the respective utility companies detailed information relative to the location of their facilities and the working schedules of the utility companies for removing or adjusting them.

It is understood and agreed that the Contractor has considered in his bid all of the permanent and temporary utility appurtenances in their present or relocated positions. The Contractor's attention is directed to the fact that the various utility companies may be relocating and constructing facilities within the project limits concurrent with the Contractor's operations. The Contractor shall coordinate his activities with the various utility companies, at all times, and may be required to work at other locations of the improvement until relocation and construction is completed by the utility company. The Contractor is advised that the relocation times and schedules listed in the special provision "Status of Utilities to be Adjusted" are only rough estimates and no extra compensation will be allowed for delays resulting from any work performed by a utility company or for their failure to meet said relocation schedule.

P:\Special Provisions - 2012\F_Drainage 156-210\185 Cooperation with Utilities.docx

SPECIAL PROVISION
FOR
WATERPROOFING OF EXISTING SANITARY MANHOLES

Description. This work shall consist of waterproofing the exterior top portion of existing sanitary manholes to prevent the infiltration of surface water into the sanitary system and shall conform to Section 602 of the Standard Specifications with the following additional requirements:

Materials and Construction. At existing sanitary manholes to be adjusted, and/or reconstructed, the contractor shall expose a maximum of 12 inches of the cone section and remove the frame and any adjusting rings.

The existing manhole frame and concrete adjusting rings shall be separated from the cone and each other. Care shall be taken to prevent damage to the concrete rings and frame while removing the mortar adhering to the rings and frame.

Once final grade is established, the concrete adjusting rings shall be reset in either a 3/8 inch thick bituminous mastic bed or a ¼ inch thick bed of redi-seal asphalt compound or an approved equal.

The frame shall be set on either a 3/8 inch thick bituminous plastic bed or two side by side courses of 1 inch rope butyl gasket material or an approved equal.

A 3/8 inch layer of bituminous mastic shall be applied to the outside of the concrete adjusting rings and/or frame making sure to completely cover the external surfaces with mastic. The mastic should extend 6 inch to 12 inch below the top of the cone section.

A sheet of polyvinyl chloride with a minimum thickness of 8 mils or E-Z wrap rubber or equivalent shall be set into the outside mastic material making sure the plastic sheet or wrap rubber is held securely to the frame and cone with polywrap tape before backfilling.

Basis of Payment. This work will be paid for at the contract unit price per each for Waterproofing Existing Sanitary Manholes to be Adjusted; Waterproofing Existing Sanitary Manholes to be Reconstructed; Waterproofing Sanitary Manholes to be Reconstructed, Special; Waterproofing Sanitary Frames and Lids to be Adjusted; or Waterproofing Sanitary Frames and Lids to be Adjusted, Special.

SPECIAL PROVISION
FOR
SODDING

This Special Provision amends the provisions of the Standard Specifications and shall be construed to be a part thereof.

252.09 Supplemental Watering. Revise the third sentence to read:

When the supplemental watering is specified on the plans, the water shall be applied at the total rate of 10 gallons per square yard (45 liters per square meter) within 24 hours of notice.

252.11 Inspection. Revise the first paragraph to read:

The Contractor shall notify the Cook County Department of Transportation and Highways of the localities from which the sod is to be obtained so that an authorized representative of the Transportation and Highways Department can inspect the field for approval. All sod shall be fresh and green when delivered. Any sod that is dried out, burned, brown or inferior in quality to the approved sod field, or in any way fails to meet the requirements of the specifications, will be rejected and removed from the job immediately and shall be replaced with suitable sod at the Contractor's expense.

To insure the delivery of suitable field sod, three weeks before cutting, the Contractor or the Supplier shall apply sufficient weed killer to eradicate existing common weeds. Seven days after the weed killer is applied, sufficient fertilizer shall be spread over the field to insure green sod prior to any delivery.

Only 2 year growing season or older approved nursery grown sod shall be placed on parkways and median strips adjacent to residential property, parks or other special areas as designated by the Engineer.

SPECIAL PROVISION
FOR
PROJECT SIGNS PLAQUE

County will erect signs announcing `A Cook County Department of Transportation and Highways, Road Improvement Project' with a 24"X4" size plaque reading `COMING SOON' in front and `COMPLETED' in back. Contractor will remove this 24"X4" size plaque and store it at the beginning of work on the contract. When work on the contract is completed, Contractor will attach the plaques to the Project signs reading `COMPLETED'. The cost of this work will be incidental to the contract.

SPECIAL PROVISION
FOR
ERADICATION OF EXISTING PAVEMENT MARKING

Description. This work shall consist of eradication of existing painted, thermoplastic or preformed plastic pavement markings by sand or hydro-blasting and/or by grinding.

Equipment. All equipment shall be approved by the Engineer prior to use and shall be sufficient capacity to efficiently and economically clean the roadway surface to the specified cleanliness. The equipment shall be power driven and in good operating condition. The equipment shall utilize moisture and oil traps, in working order, of sufficient capacity to remove contaminants from the air and prevent deposition of moisture, oil, or other contaminants on the roadway surface.

If a high pressure water spray or "hydro blast" is used, the pressure at the nozzle shall be no less than 6,500 psi and no more than 9,500 psi with 10 to 13 gallons of water per minute used.

The blasting medium shall be a quality commercial product capable of producing the specified surface cleanliness without the deposition of deleterious materials on the cleaned surface.

Eradication Requirements. The eradication shall be performed only on that portion of the roadway surface designated by the Engineer or as specified in the plans. Widths, lengths, and shapes of the blast-cleaned surface shall be of sufficient size to include the full area of the specified pavement marking to be removed.

Ninety percent (90%) of the pavement substrate shall be exposed. This shall include not only removal of the existing white or yellow pavement markings, but shall also include sufficient removal of any black markings which exist between the lane lines.

Over cleaning to the extent of possible damage to the roadway surface shall be held to a minimum. Very small particles of tightly adhering existing markings may remain in place if, in the opinion of the Engineer, complete removal of the small particles will result in pavement surface damage.

The cleaning operation shall be a continuous moving process with minimum interruption to traffic. Care should be taken to protect all persons and property from injury or damage.

Method of Measurement. Eradicated pavement marking shall be measured for payment in square feet. The area used for measurement shall be the actual area of lines and in the case of letters and symbols shall be the area of the smallest rectangle that will circumscribe each individual letter or symbol.

Basis of Payment. This work will be paid for at the contract unit price per square foot of ERADICATION OF EXISTING PAVEMENT MARKING, which price shall include eradication of existing painted, thermoplastic or preformed plastic pavement markings to the satisfaction of the Engineer.

SPECIAL PROVISION
FOR
RAISED REFLECTIVE PAVEMENT MARKER

This special provision applies to pavement sections where existing surface will be diamond ground or will remain intact, and does not apply to pavement sections where existing surface will be milled, overlaid, removed, or recycled.

The removal of existing raised reflective pavement markers, including base casting and reflective element, shall meet the requirements of Section 783 of the "Standard Specifications for Road and Bridge Construction", except that the pavement shall be repaired to the satisfaction of the Engineer with epoxy that has similar color as pavement, and shall be approved by the Engineer prior to use. This work will be paid for at the contract unit price per each for RAISED REFLECTIVE PAVEMENT MARKER REMOVAL.

The installation of new raised reflective pavement markers shall meet the requirements of Section 781 of the "Standard Specifications for Road and Bridge Construction". To ensure proper installation of the new raised reflective pavement markers, the markers shall be located fore or aft of the existing casting location and on the existing alignment, or as directed by the Engineer. This work will be paid for at the contract unit price per each for RAISED REFLECTIVE PAVEMENT MARKER.

SPECIAL PROVISION
FOR
TRAFFIC SIGNAL WORK GENERAL

All work and equipment performed and installed under this contract, shall be governed and shall comply to the State of Illinois "Standard Specifications for Road and Bridge Construction" latest edition, herein referred to as the Standard Specifications and the "District One Standard Design Details"; the State of Illinois "Manual on Uniform Traffic Control Devices for Streets and Highways", latest edition; the "National Electrical Code" latest edition herein referred to as the NEC; the National Electrical Manufacturers Association, herein referred to as NEMA (all publications for traffic control items) latest editions; the International Municipal Signal Association, herein referred to as IMSA "Official Wire & Cable Specifications Manual" latest edition; the Institute of Transportation Engineers, herein referred to as the ITE, Technical Report No.1, "A Standard for Adjustable Face Vehicular Traffic Control Heads"; AASHTO "Standard Specifications for Structural Supports for Highway Signs, Luminaries and Traffic Signals" and the "Supplemental Specifications" and "Recurring Special Provisions" noted herein.

The following Special Provisions supplement the above specifications, manuals, and code. The intent of these Special Provisions is to prescribe the materials and construction methods commonly used for traffic signal installations. All material furnished shall be new. The locations and the details of all installations shall be as indicated on the Plans or as directed by the Engineer. Traffic signal construction and maintenance work shall be performed by personnel holding IMSA Traffic Signal Technician Level II certification. The work to be done under this contract consists of furnishing and installing all traffic signal work as specified in the Plans and as specified herein in a manner acceptable and approved by the Engineer. In case of conflict with any part or parts of said documents, these Special Provisions shall take precedence and shall govern.

In order to reduce possible vehicular conflicts with fixed objects and avoid public criticism, it is necessary to require that no posts, poles, heads, or controller cabinets be installed until all traffic signal control equipment is brought to and located on the job site.

The construction, installation and/or removal work shall be accomplished at all the intersections within the limits of this project or as shown in the plans.

Description of Work. The work to be done under this contract consists of furnishing and installing all traffic signal work as specified on the Plans and as specified herein in a manner acceptable and approved by the Engineer.

Restoration. All areas and plant material damaged by the installation of Traffic Signal posts, mast arm poles, underground cables or conduits, handholes and control cabinets shall be replaced as follows:

- Grass Areas: Replace top soil to a depth of four (4) inches (100 mm), re-grade shoulders, ditch slopes, and open areas back to former existing grades, fertilize, seed and mulch all damaged areas.

- Sod Areas (areas adjacent to residential, commercial and industrial properties and any other areas as directed by the engineer): Fertilize and re-sod damaged areas.
- Plant Materials: Remove and replace damaged trees, shrubs and vines with the same varieties that existed prior to damage.

- Shoulders other than Stabilized and Backslopes, medians, sidewalks, pavement, etc.: Replace shoulder to original condition and restore edge of backslope to original lines and grades. Medians, sidewalks and pavement shall be replaced in kind.

- All brick pavers disturbed in the work area shall be restored to their original configuration or as directed by the Engineer. All damaged brick pavers shall be replaced with a comparable material approved by the Engineer

All damaged landscape shall be replaced in accordance with Section 250 through 254 of the Standard Specifications.

Any damage, due to the installation of traffic signal equipment; or necessary removal at handholes, jacking pits, and inspection openings, of sidewalks, curbs, gutters, median and island paving, and/or pavement, shall be repaired or replaced by the Contractor. Repair or replacement shall be made with a like material of like thickness to the existing surface. Restoration of traffic signal work area shall be included in related pay items such as foundation, conduit, handhole, trench and backfill, etc.

Control of Traffic Signal Materials.

All work shall meet the requirements of the "Standard Specifications for Road and Bridge Construction", except as follows:

The controller and all control equipment shall be of a manufacturer that is approved by this Department. The manufacturer shall have a representative located in the six (6) county Chicago areas.

The intent of this Section is to prescribe the materials and construction methods commonly used for traffic signal installations. All material furnished shall be new. Traffic materials and equipment shall bear the U.L. label whenever such labeling is available.

All iron and steel products, which are to be incorporated into work shall be domestically manufactured or produced and fabricated. The contractor shall obtain from the iron or steel producer and/or fabricator, in addition to the mill analysis, a certification that all iron or steel materials meet these domestic source requirements.

The application of all coatings, epoxy, galvanizing, painting, etc., to metal products shall be domestically applied.

Metal material other than iron and steel, which are not domestically produced, may be accepted provided:

(a) The contractor notifies the Department in advance of his/her intension to use other than domestically manufactured or produced material.

(b) Written evidence is provided in English of compliance with all requirements of the specifications.

(c) Physical tests conducted by the department verify the acceptability of the material.

Before any signal equipment, including mast arm assemblies, poles, controller cabinets, all control equipment and signal heads, are delivered to the job site, the Contractor shall obtain and forward to the Engineer a certified, notarized statement from the manufacturer, containing the catalog numbers of the

equipment and/or material, guaranteeing that the equipment and/or material, after manufacture, comply in all respects with the requirements of the Specifications and these Special Provisions.

All material approval requests shall be within thirty (30) consecutive calendar days after the Contract is awarded, or at the pre-construction meeting, whichever is first.

All cost of work and materials required to comply with the above requirements shall be included in the pay item bid prices, under which the subject materials and signal equipment are paid, and no additional compensation will be allowed. Materials and signal equipment not complying with the above requirements that have been installed on the job will be done at the Contractor's own risk and may be subject to removal and disposal at the Contractor's expense.

The Contractor must submit the following for approval by the Engineer:

- Three (3) complete set of manufacturer's descriptive literature, drawings, and specifications of the traffic signal equipment, handholes, junction box, cable, conduit and all associated items that will be installed on the contract. Partial or incomplete submittal will be returned without review.

- The contractor shall supply samples of all wire and cable, and shall make up and supply samples of each type of cable splice proposed for use in the work for the-Engineer's approval.

- Seven (7) complete shop drawings of the mast arm assemblies and poles including combination mast arm poles are required, showing in detail the fabrication, anchor bolts, reinforcing materials, design material, thickness of sections and weld sizes. These drawing shall be at least 11" x 17" (275mm x 425mm) in size and adequate quality for microfilming.

- Certain non-standard mast arm poles and assembles will require additional review. The Contractor shall account for additional review time in their schedule.

- Seven (7) copies of a letter from the Traffic Signal Contractor on company letterhead listing contract number or permit number, project location limits, pay item number and description and listing the manufacturer's name and model numbers of the proposed equipment to be supplied and stating that the proposed equipment meets all Contract requirements. The letter will be reviewed by the Engineer to determine whether the equipment to be used is approvable. The letters will be stamped as approved or not approved accordingly and returned to the Contractor.

- Five (5) copies of a letter from the Traffic Signal Contractor listing the System Coordination and Timing (SCAT) consultant's name shall be supplied. The letter will be reviewed by the Engineer to determine whether the SCAT consultant to be used is approved. The letters will be stamped as approved or not approved accordingly and returned to the Contractor.

- Where certifications and/or warranties are specified. The information submitted for approval shall include certifications and warranties. Certifications involving inspections and/or tests of material shall be complete with all test data, dates and times.

- All above shall be stamped with the Section Number, Permit Number, or Contract Number and Intersection(s) name(s). Pay item numbers shall also be included. If the above required information is

not on each sheet of the above literature or letters, the equipment and material cuts will not be reviewed and shall be returned to the Contractor.

- Exceptions, Deviations and Substitutions. In general, exceptions to and deviations from the requirements of the Contract Documents will not be allowed. It is the Contractor's responsibility to note any deviations from Contract requirements at the time of submittal and to make any requests for deviations in writing to the Engineer. In general, substitutions will not be acceptable. Requests for substitutions must demonstrate that the proposed substitution is superior to the material or equipment required by the Contract Documents. No exceptions, deviations or substitutions will be permitted without the approval of the Engineer.

- After the engineer reviews the submittals for conformance with the design concept of the project, the Engineer will stamp the drawings indicating their status. Since the Engineer's review is for conformance with design concept only. It is the Contractor's responsibility to coordinate the various items into a working system as specified. The Contractor shall not be relieved from responsibility for errors or omissions in the shop working, layout drawings, or other documents by the Departments approval thereof. The Contractor must be in full compliance with contract and specification requirements.

Maintenance and Responsibility.

Revise Article 801.11 to read as follows.

a) Existing traffic signal installations and/or any electrical facilities at all or various locations may be altered or reconstructed totally or partially as part of the work on this Contract. The Contractor is hereby advised that all traffic control equipment, presently installed at these locations, may be the property of the State of Illinois, Department of Transportation, Division of Highways, Cook County Department of Transportation and Highways, Private Developer, or the Municipality in which they are located. Once the Contractor has begun any work on any portion of the project all traffic signals within the limits of this contract or those which have the item "Maintenance of Existing Traffic Signal Installation", "Temporary Traffic Signal Installation(s)" and/or "Maintenance of Existing Flashing Beacon Installation", shall become the full responsibility of the Contractor. Automatic Traffic Enforcement equipment is not owned by the County and the Contractor shall not be responsible for maintaining it during construction. The Contractor shall supply the engineer and the Department's Electrical Maintenance Contractor a 24-hour emergency contact name and telephone number.

b) When the project has a pay item for "Maintenance of Existing Traffic Signal Installation", "Temporary Traffic Signal Installation(s)" and/or "Maintenance of Existing Flashing Beacon Installation", the Contractor must notify both the Design Engineer at (312) 603-1730 and the Department's Electrical Maintenance Contractor, of their intent to begin any physical construction work on the Contract or any portion thereof. This notification must be made a minimum of seven (7) working days prior to the start of construction to allow sufficient time for inspection of the existing traffic signal installation(s) and transfer of maintenance to the Contractor. If work is started prior to an inspection, maintenance of the traffic signal installation(s) will be transferred to the Contractor without an inspection. The Contractor will become responsible for repairing or replacing all equipment that is not operating properly or is damaged at no cost to the owner of the traffic signal. Final repairs or replacement of damaged equipment must meet the approval of the

Engineer prior to or at the time of final inspection otherwise the traffic signal installation will not be accepted.

c) Projects which call for the storage and re-use of existing traffic signal equipment shall meet the requirements of Article 801.15(C) of the Standard Specifications, which call for a 30 day test period prior to project acceptance.

d) Contracts such as pavement grinding or patching which result in the destruction of traffic signal loops may not require maintenance transfer, unless a pay item of "Maintenance of Existing Traffic Signal Installation" is included in the project. When the pay item of "Maintenance of Existing Traffic Signal Installation" is not included, the Contractor is required to notify of intent to work and an inspection. A minimum of seven (7) working days prior to the loop removal, the Contractor shall notify the Design Engineer at (312) 603-1730, the Department's Electrical Maintenance Contractor and the owner of automatic traffic enforcement prior to the loop removal, at which time arrangements will be made to adjust the traffic controller timing to compensate for the absence of detection. Damaged Automatic Traffic Enforcement equipment, including cameras, detectors, or other peripheral equipment, shall be replaced by others, per Permit agreements or other agreements, at no cost to the contract except for City of Chicago projects in which the detectors shall be replaced. See additional requirements in these specifications under Inductive Loop Detector.

e) The Contractor is further advised that the existing traffic signal(s), and/or the existing temporary installation(s), must remain in operation during all construction stages except for the most essential down time. Any shutdown of the traffic signal installation(s), for a period to exceed fifteen (15) minutes, must have the prior approval of the Engineer. Such approval will generally only be granted during the period extending from 10:00 a.m. to 3:00 p.m. on weekdays. Shutdowns will not be allowed during inclement weather or during Holiday periods. Any other traffic signal shutdown, either for periods in excess of one (1) hour or outside of the 10:00 a.m. to 3:00 p.m. weekday period must have prior approval of the Engineer. The Contractor, prior to the commencement of his work, shall notify the State Electrical Maintenance Contractor, the Cook County Electrical Maintenance Contractor, or the concerned Municipality, of his intent to perform this work.

f) The Contractor shall be fully responsible for the safe and efficient operation of the traffic signals. Any inquiry, complaint or request by the Department, the Department's Electrical Maintenance Contractor or the public, shall be investigated and repairs begun within one hour. Failure to provide this service will result in liquidated damages of $500 per day per occurrence. In addition, the Department reserves the right to assign any work not completed within this timeframe to the Electrical Maintenance Contractor. All costs associated to repair this uncompleted work shall be the responsibility of the Contractor. Failure to pay these costs to the Electrical Maintenance Contractor within one month after the incident will result in additional liquidated damages of $500 per month per occurrence. Unpaid bills will be deducted from the cost of the Contract. The Department's Electrical Maintenance Contractor may inspect any signalizing device on the Department's highway system at any time without notification.

g) Any proposed activity in the vicinity of a highway-rail grade crossing must adhere to the guidelines set forth in the current edition of the Manual on Uniform Traffic Control Devices (MUTCD) regarding work in temporary traffic control zones in the vicinity of highway-rail grade crossings which states that lane restrictions, flagging, or other operations shall not create conditions where

vehicles can be queued across the railroad tracks. If the queuing of vehicles across the tracks cannot be avoided, a uniformed law enforcement officer or flagger shall be provided at the crossing to prevent vehicles from stopping on the tracks, even if automatic warning devices are in place.

Damage to Traffic Signal System.

Add the following to Article 801.12(b).

a) Any damaged equipment or equipment not operating properly from any cause whatsoever shall be repaired with new equipment provided by the contractor at no additional cost to the Contract and/or owner of the traffic signal system all as approved by the Engineer. Final repairs or replacement of damaged equipment must meet the approval of the Engineer prior to or at the time of final inspection otherwise the traffic signal will not be accepted. Cable splices outside the controller cabinet will not be allowed.

b) Automatic Traffic Enforcement equipment, such as Red Light Enforcement cameras, detectors, and peripheral equipment, damaged or not operating properly from any cause whatsoever, shall be the responsibility of the municipality or the Automatic Traffic Enforcement Company per Permit agreement or other agreements. Except in the City of Chicago in which detectors are damaged due to a County project.

Traffic Signal Inspection (Turn – On).

Revise Article 801.15b to read as follows.

a) The Contractor must have all electric work completed, the electrical service installation connected by the utility company and equipment field tested by the Vendor prior to the Department's "turn-on" field inspection. If in the event the Engineer determines the work is not complete and the inspection will require more than two (2) hours to complete, the inspection shall be canceled and the Contractor will be required to reschedule at another date. The maintenance of the traffic signals will not be accepted until all punch list work is corrected and re-inspected. The Department will not grant a field inspection until written certification is provided from the Contractor stating the equipment has been field tested and the intersection is operating according to Contract requirements.

b) When the road is open to traffic, except as otherwise provided in Section 850 of the Standard Specification, the Contractor may request a turn-on and inspection of the completed traffic signal installation at each separate location. This request must be made to the Design Engineer at (312) 603-1730 a minimum of seven (7) working days prior to the time of the requested inspection. The Department will not grant a field inspection until notification is provided from the Contractor that the equipment has been field tested and the intersection is operating according to Contract requirements. The Department's facsimile number is (312) 603-9956. The Contractor must invite local fire department personnel to the turn-on when Emergency Vehicle Pre-emption (EVP) is included in the project. When the contract includes the item RE-OPTIMIZE TRAFFIC SIGNAL SYSTEM, OPTIMIZE TRAFFIC SIGNAL SYSTEM, or TEMPORARY TRAFFIC SIGNAL TIMINGS, the Contractor must notify the SCAT Consultant of the turn-on schedule, as well as stage changes and phase changes during construction.

c) The Contractor must have all traffic signal work completed and the electrical service installation connected by the utility company prior to requesting an inspection and turn-on of the traffic signal installation. The Contractor shall be responsible to provide a Police Officer to direct traffic at the time of testing.

d) The Contractor shall provide a representative from the control Equipment Vendor's office to attend the traffic signal inspection for both permanent and temporary traffic signal turn-ons. Upon demonstration that the signals are operating and all work is completed in accordance with the Contract and to the satisfaction of the Engineer, the Engineer will then allow the signals to be placed in continuous operation. The Agency that is responsible for the maintenance of each traffic signal installation will assume the maintenance upon successful completion of this inspection.

e) Acceptance of the traffic signal equipment by the Department shall be based upon inspection results at the traffic signal turn-on. If approved, traffic signal acceptance shall be verbal at the turn-on inspection followed by written correspondence from the Engineer. The Contractor shall be responsible for all traffic signal equipment and associated maintenance thereof until Departmental acceptance is granted.

f) All equipment and/or parts to keep the traffic signal installation operating shall be furnished by the Contractor. No spare traffic signal equipment is available acceptable from the Department.

g) All punch list work shall be completed within two (2) weeks after the final inspection. The Contractor shall notify the Design Engineer at (312) 603-1730 to inspect all punch list work. Failure to meet these time constraints shall result in liquidated damage charges of $500 per month per incident.

h) All cost of work and materials required to comply with the above requirements shall be included in the pay item bid prices under which the subject materials and signal equipment are paid and no additional compensation will be allowed. Materials and signal equipment not complying with the above requirements that have been installed on the job will be at the Contractor's own risk and shall be subject to removal and disposal at the Contractor's expense.

i) The Contractor shall furnish the Cook County Department of Transportation and Highways with any special tools or wrenches that may be required for assembling or maintaining the control equipment and traffic control signal head assemblies.

j) All control cable, when complete in place but before permanent connection, shall be subject to insulation tests at the discretion of the Engineer. The tests shall be made with approved insulation resistance testing equipment rated at 500 volts D.C. and witnessed by the Engineer. Results of these tests shall be submitted to the Department in written form, bearing the Engineers signature and shall become part of the project records. A final inspection of the traffic signal installation shall not be held until results of this insulation test have been received.

k) All equipment such as new controllers and allied central equipment with the exception of cable, conduit, and other materials which require the use of the State of Illinois Materials Testing Laboratories, shall be built in the suppliers shop and inspected by a representative of this Department prior to the installation of such equipment, and upon approval of this equipment an inspection ticket will be issued to the Contractor by the inspection agency (State of Illinois Material Testing Laboratory or the Cook County Transportation and Highways Mechanical-Electrical

Section). The controller and allied control equipment shall be prepared in the suppliers shop and run under a load of a minimum of 500 watts per phase for at least 48 hours before it is inspected for proper operation and sequencing. After it passes this test an inspection ticket will be issued by the Cook County Transportation and Highways Mechanical-Electrical Section representative and it can then be delivered to the job site for installation.

l) Upon completion of the installation, a final inspection will be carried out by qualified representatives of the Highway Agencies involved.

m) If the Contractor fails to comply with any of the aforementioned requirements, the County shall impose such sanction as it may determine to be appropriate including but not limited to withholding all payments to the Contractor on this contract until the provisions of this special provision are complete with and/or implementation of article 108.10 of the standard specifications.

At the final inspection it will be required that the Contractor will have submitted to the Engineer all necessary inspection tickets for all new equipment and materials installed under this Contract. If the Contractor has not obtained the inspection tickets on any portion of the new equipment and materials, the representative of this Department will have the authority to postpone the final inspection until such time as the above has been satisfied. Any postponement of the final inspection for this reason shall not relieve the Contractor of his full maintenance responsibilities until such time as the installation is re-inspected and accepted by the County.

The County requires the following from the Contractor at traffic signal turn-on.

1) The Contractor shall, at the turn-on furnish one set of signal plans (24"x36") of record with field revisions marked in red ink to the maintaining agency.

2) Written notification from the Contractor and the Equipment Vendor of satisfactory field testing.

3) A knowledgeable representative of the controller equipment supplier shall be required at the permanent and temporary traffic signal turn-on. The representative shall be knowledgeable of both cabinet design and controller functions and shall have sufficient test and spare equipment to make the traffic signal installation operational.

4) A copy of the approved material letter.

5) One (1) copy of the operation and service manuals of the signal controller and associated control equipment.

6) Five (5) copies 11" x 17" (280 mm X 430 mm) or 22" x 34" (560 mm x 860 mm) of the cabinet wiring diagrams and cable logs.

7) The controller manufacturer shall supply a printed form, not to exceed 11" x 17" (280 mm x 430 mm), for recording the traffic signal controller's timings; backup timings, coordination splits, offsets, cycles; TBC; Time of Day, week and year programs; traffic responsive program, detector phase assignment, type and detector switching; and any other functions programmable from the keyboard. The form shall include a location, date, manufacturers name, controller model and software version. The form shall be approved by the Engineer and a minimum of three (3) copies must be furnished at each turn-on. The manufacturer must provide all programming information used within the controller at the time of turn-on.

8) All Manufacturer and Contractor warranties and guaranties required by Article 801.14.

RECORD DRAWINGS

The requirements listed for Electrical Installation shall apply for Traffic Signal Installations in Article 801.16. Revise the 2nd paragraph of Article 801.16 of the Standard Specifications to read:

a. "When the work is complete, and seven days before the request for a final inspection, the full-size set of contract drawings. Stamped "RECORD DRAWINGS", shall be submitted to the Engineer for review and approval and shall be stamped with the date and the signature of the Contractor's supervising Engineer or electrician. The record drawings shall be submitted in PDF format on CDROM as well as hardcopy for review and approval.

b. In addition to the record drawings, copies of the final catalog cuts which have been Approved or Approved as Noted shall be submitted in PDF format along with the record drawings. The PDF files shall clearly indicate the pay item either by filename or PDF Table of Contents referencing the respective pay item number for multi-item PDF files. Specific part or model numbers of items which have been selected shall be clearly visible."

Add the following to Article 801.16 of the Standard Specifications:

"In addition to the specified record drawings, the Contactor shall record GPS coordinates of the following traffic signal components being installed, modified or being affected in other ways by this contract:

- All Mast Arm Poles and Posts
- Handholes
- Conduit roadway crossings
- Controller Cabinets
- Communication Cabinets
- Electric Service Disconnect locations
- CCTV Camera installations
- Fiber Optic Splice Locations

Datum to be used shall be North American 1983.

Data shall be provided electronically and in print form. The electronic format shall be compatible with MS Excel. Latitude and Longitude shall be in decimal degrees with a minimum of 6 decimal places. Each coordinate shall have the following information:

1. Description of item
2. Designation or approximate station if the item is undesignated
3. Latitude
4. Longitude

Examples:

Description	Designation	Latitude	Longitude
Mast Arm Pole Assembly (dual, combo, etc)	MP (SW, NW, SE or NE corner)	41.580493	-87.793378
FO mainline splice handhole	HHL-ST31	41.558532	-87.792571
Handhole	HH	41.765532	-87.543571
Electric Service	Elec Srv	41.602248	-87.794053
Conduit crossing	SB IL83 to EB I290 ramp SIDE A	41.584593	-87.793378
PTZ Camera	PTZ	41.584600	-87.793432
Signal Post	Post	41.558532	-87.792571
Controller Cabinet	CC	41.651848	-87.762053
Master Controller Cabinet	MCC	41.580493	-87.793378
Communication Cabinet	ComC	41.558532	-87.789771
Fiber splice connection	Toll Plaza34	41.606928	-87.794053

Prior to the collection of data, the contractor shall provide a sample data collection of at least six data points of known locations to be reviewed and verified by the Engineer to be accurate within 100 feet. Upon verification, data collection can begin. Data collection can be made as construction progresses, or can be collected after all items are installed. If the data is unacceptable the contractor shall make corrections to the data collection equipment and or process and submit the data for review and approval as specified.

Accuracy. Data collected is to be mapping grade. A handheld mapping grade GPS device shall be used for the data collection. The receiver shall support differential correction and data shall have a minimum 5 meter accuracy after post processing.

GPS receivers integrated into cellular communication devices, recreational and automotive GPS devices are not acceptable.

The GPS shall be the product of an established major GPS manufacturer having been in the business for a minimum of 6 years."

Location of Underground State and County Maintained Facilities.

Revise Article 803 to read as follows.

If this contract requires the services of an electrical contractor, the Contractor shall be responsible at his/her own expense for locating existing IDOT and CCDOTH facilities prior to performing any work. If this contract does not require the services of electrical contractor, the Contractor may request one free locate for existing IDOT and CCDOTH electrical facilities from the Electrical Maintenance Contractor(s) prior to the start of any work. Additional requests may be at the expense of the Contractor. The location of underground traffic facilities does not relieve the Contractor of their responsibility to repair any facilities damaged during construction at their expense.

The exact location of all utilities shall be field verified by the Contractor before the installation of any components of the traffic signal system. For locations of utilities, locally owned equipment, and leased enforcement camera system facilities, the local Counties or Municipalities may need to be contacted, in the City of Chicago contact D.I.G.G.E.R. at (312) 744-7000 and for all other locations contact J.U.L.I.E. at 1-800-892-0123 or 811.

SPECIAL PROVISION
FOR
DETECTOR LOOP

This work shall consist of furnishing and installing detector loop in accordance with the requirements of Section 886 and 1079 of the Standard Specifications, except as follows:

Description.
This work shall consist of furnishing and installing a detector loop in the pavement.

Procedure.
A minimum of seven (7) working days prior to the Contractor cutting loops, the Contractor shall have the proposed loop locations marked and contact the CCDOTH Design Engineer at (312) 603-1730 to inspect and approve the layout. When preformed detector loops are installed, the Contractor shall have them inspected and approved prior to the pouring of the portland cement concrete surface, using the same notification process as above.

Installation.
Each loop lead-in shall be placed in a separate conduit from edge of pavement to handhole. Loop detectors shall be installed according to the requirements of the "District 1 Standard Traffic Signal Design Details". Saw-cuts (homerun on preformed detector loops) from the loop to the edge of pavement shall be made perpendicular to the edge of pavement when possible in order to minimize the length of the saw cut (homerun on preformed detector loops) unless directed otherwise by the Engineer or as shown on the plans. Spacing between the lead-ins (holes drilled in the pavement) shall not be less than one (1) foot (300 mm) and shall be located one (1) foot (300 mm) from the edge of pavement. Loop lead-in wires should be twisted to provide a minimum of five (5) turns per foot (fifteen [15] turns per meter) from the loop to the splice.

The cable splice connection of the detector loop and the lead-in cable to the controller shall conform to Section 873 of the Standard Specifications or the requirements set forth in the "District 1 Standard Traffic Signal Design Details".

Each loop detector lead-in wire shall be labeled in the handhole using a Panduit PLFIM water proof tag or approved equal secured to each wire with nylon ties. The lead-in wire, including all necessary connections for proper operation, from the edge of pavement to the handhole shall be incidental to the price of the detector loop.

The detector loop cable insulation shall be labeled with the cable specifications.

Resistance to ground shall be a minimum of 100 megohms under any conditions of weather or moisture. Inductance shall be more than 50 and less than 700 microhenries. Quality readings shall be greater than 5.

Type 1:

- All loops installed in new asphalt pavement shall be installed in the binder course and not in the surface course. The edge of pavement or the curb shall be cut with a 1/4" (6.3 mm) x 4" (100 mm) long sawcut to mark the location of each loop lead-in.

- Loop sealant shall be a two-component thixotropic chemically cured polyurethane either Chemque Q-Seal 295, Perol Elastic Cement A/C Grade or an approved equal. The sealant shall be installed 1/8" (3 mm) below the pavement surface, if installed above the surface the overlap shall be removed immediately.

- Detector loop measurements shall include the sawcut and the length of the loop lead-in leading to the edge of pavement. The lead-in wire, including all necessary connections for proper operations, from the edge of pavement to the handhole, shall be incidental to the price of the detector loop. Unit duct, trench and backfill, and drilling of pavement or handholes shall be incidental to detector loop quantities.

- The corners of all loops shall be core drilled with a two (2) inch (50 mm) bit. All joints and cracks in the pavement that the loop crosses must be core drilled.

Preformed:

This work shall consist of furnishing and installing a rubberized heat resistant preformed traffic signal loop in accordance with the Standard Specifications, except for the following:

- Preformed detector loops shall be installed in new pavement constructed of portland cement concrete using mounting chairs or tied to re-bar or the preformed detector loops may be placed in the sub-base. Loop lead-ins shall be extended to a temporary protective enclosure near the proposed handhole location. The protective enclosure shall provide sufficient protection from other construction activities and may be buried for additional protection.

- Handholes shall be placed next to the shoulder or back of curb when preformed detector loops enter the handhole. Non-metallic coilable duct, included in this pay item, shall be used to protect the preformed lead-ins from back of curb to the handhole.

- Preformed detector loops shall be factory assembled with ends capped and sealed against moisture and other contaminants. Homeruns and interconnects shall be pre-wired and shall be an integral part of the loop assembly. The loop configurations and homerun lengths shall be assembled for the specific application. The loop and homerun shall be constructed using 11/16" (17.2 mm)outside diameter (minimum), 3/8" (9.5 mm) inside diameter (minimum) Class A oil resistant synthetic cord reinforced hydraulic hose with 250 psi (1,720 kpa) internal pressure rating or a similar sized XLPE cable jacket. Hose for the loop and homerun assembly shall be one continuous piece. No joints or splices shall be allowed in the hose except where necessary to connect homeruns or interconnects to the loops. This will provide maximum wire protection and loop system strength. Hose tee connections shall be heavy duty high temperature synthetic rubber. The tee shall be of proper size to attach directly to the hose, minimizing glue joints. The tee shall have the same flexible properties as the hose to insure that the whole assembly can conform to pavement movement and shifting without cracking or breaking. For XLPE jacketed preformed loops, all splice connections shall be soldered, sealed,

and tested before being sealed in a high impact glass impregnated plastic splice enclosure. The wire used shall be #16 THWN stranded copper.

The number of turns in the loop shall be application specific. Homerun wire pairs shall be twisted a minimum of four turns per foot. No wire splices will be allowed in the preformed loop assembly. The loop and homeruns shall be filled and sealed with a flexible sealant to insure complete moisture blockage and further protect the wire. The preformed loops shall be constructed to allow a minimum of 6.5 feet of extra cable in the handhole. Six foot (1.8 m) round loop(s) may be substituted for six foot (1.8 m) by six foot (1.8 m) square loop(s) and shall be paid for as 24 feet (7.2 m) of detector loop.

Method of Measurement.

This work will be measured for payment in feet (meters) in place. Type I detector loop will be measured along the sawed slot in the pavement containing the loop and lead-in, rather than the actual length of the wire. Preformed detector loops will be measured along the detector loop and lead-in embedded in the pavement, rather than the actual length of the wire.

Basis of Payment. This work will be paid for at the contract unit price per FOOT (METER) of DETECTOR LOOP, TYPE I or PREFORMED DETECTOR LOOP, as specified in the plans, which price shall be payment in full and for furnishing, installing and testing the Detector Loop and all related connections for proper operation.

SPECIAL PROVISION
FOR
COILABLE NON-METALLIC CONDUIT

This work shall consist of furnishing and installing empty Coilable Non-Metallic Conduit (CNC) in trench of the type and size specified. The installation of CNC shall meet all applicable requirements of the Standard Specifications of Section 810 and 811. All installations of CNC shall be incidental to the contract and not paid for separately. polyethylene duct shall be used for all detector loop raceways to handholes. All duct shall be placed a minimum depth of 30 inches (750 mm) or as shown on the contract plans or standard details.

The conduit shall be a polyethylene duct which is intended for underground use and which can be manufactured and coiled or reeled in continuous transportable lengths and uncoiled for further processing and/or installation without adversely affecting its properties of performance. The conduit and its manufacture shall conform to the standards of NEMA Publication TC7, ASTM Standard Specifications D3485 and NEC Article 353.

On temporary traffic signal installations with detector loops, CNC shall be used for detector loop raceways from the saw-cut to 10 feet (3 m) up the wood pole, unless otherwise shown on the plans.

Material. The conduit shall be manufactured from high density polyethylene complying with ASTM D1248, Type III, Class C and the requirements listed in Table 2-1 of NEMA TC7. Submittal information shall demonstrate compliance with the details of these requirements.

Construction. Conduit dimensions shall conform to the standards listed in Table 2-2 of NEMA TC7. Submittal information shall demonstrate compliance with these requirements.

As specified in NEMA TC7, the conduit shall be clearly and durably marked at least every 10 feet (3 meters) with the material designation (HDPE for high density polyethylene), nominal size of the conduit and the name and/or trademark of the manufacturer.

Freeze-up Test:. A ten foot length of the conduit bent into an upright "U" shape shall be filled with water and then placed in a low temperature cabinet and maintained at -20 degrees C for 24 hours. The conduit shall not crack or burst during the test.

Compression Test. The test shall be conducted on a six inch (150 mm) sample of the conduit. Samples are placed between six inch (150 mm) plates and compressed at the rate of one-half inch (12.5 mm) per minute until the distance between the plates is reduced by 50%, recording the load required to compress the conduit. The samples are then removed and allowed to stand for exactly 5 minutes. The load required to compress the sample shall be equal to or greater than that listed below and the conduit shall have returned to nor less than 85% of its original diameter at the end of the 5 minutes.

Nominal Size		Load
¾ inch.	20 mm	122 lbs.
1 inch.	25 mm	167 lbs.
1 ¼ inch.	30 mm	243 lbs.
1 ½ inch.	40 mm	297 lbs.
2 inch.	50 mm	387 lbs.

Tests. All of the tests referred to above and the applicable tests in the cited ASTM Standards shall be performed on the conduit at the manufacturer's plant and certified copies of the reports of the results of these tests shall be submitted to the Engineer prior to the installation of the CNC.

Basis of Payment.
All installations of CNC for loop detection shall be included in the contract and not paid for separately.

SPECIAL PROVISION
FOR
REBUILD EXISTING HANDHOLE
REBUILD EXISTING HEAVY DUTY HANDHOLE
REBUILD EXISTING DOUBLE HANDHOLE

This item shall consist of rebuilding a handhole, heavy duty handhole and/or double handhole at location(s) as shown on the plans or as directed by the Engineer. The work shall consist of removing the frame and cover and the walls of the handhole to a depth of thirteen (13) inches (330 mm) below finished grade.

Upon completion of the above work, for handhole and heavy duty handhole four (4) holes, for the double handhole six (6) holes, four (4) inches (100 mm) in depth and one half (1/2) inch (15 mm) in diameter, shall be drilled into the remaining concrete, for handhole and heavy duty handhole one (1) hole centered on each wall and for the double handhole one (1) hole centered on each side wall and two (2) holes evenly spaced on the front and back walls. Number 3 steel dowels eight (8) inches (200 mm) in length shall be furnished and installed in the drilled holes with masonry epoxy.

All concrete debris shall be removed from the right-of-way to a location approved by the Engineer.

The area adjacent to each wall of the handhole shall be excavated to allow forming. All steel hooks (galvanized), frame and cover and concrete shall be provided to construct a rebuilt handhole, heavy duty handhole or double handhole according to applicable portions of the Standard Specifications. If the Contractor damages the existing frame and cover, the Contractor shall be responsible for replacing the frame and cover at no cost to the County.

Basis of Payment. This work will be paid for at the contract unit price EACH for REBUILD EXISTING HANDHOLE, REBUILD EXISTING HEAVY DUTY HANDHOLE, REBUILD EXISTING DOUBLE HANDHOLE, REBUILD EXISTING HANDHOLE TO HEAVY DUTY HANDHOLE which price shall be payment in full for all labor, all materials, and equipment necessary to complete the work described above and as indicated in the Plans.

SPECIAL PROVISION
FOR
MAINTENANCE OF EXISTING TRAFFIC SIGNAL INSTALLATION

This item shall consist of maintaining the existing traffic signal installation at an intersection as shown on the plans and as described herein. Full maintenance responsibility shall start as soon as the Contractor begins any physical work on the contract or any portion thereof. The energy charges for the operation of the traffic signal installation shall be paid for by others. The maintenance of an existing traffic signal installation shall meet the requirements of Section 801.11 and 850 of the Standard Specifications except as follows:

This item shall include maintenance of all traffic signal equipment at the intersection, including emergency vehicle pre-emption equipment, master controllers, uninterruptible power supply (UPS and batteries) telephone service installations, communications cables and conduit to adjacent intersections, and other traffic signal equipment, but shall not include Automatic Traffic Enforcement equipment, such as Red Light Enforcement cameras, detectors, or peripheral equipment, not owned by the State and County.

Seven days prior to assuming maintenance of the existing traffic signal installation(s) under this contract, the Contractor shall request that the Resident Engineer contact the Cook County Design Engineer at (312) 603-1730 for an inspection of the installation(s). The Design Engineer shall establish a date and time of inspection and at this time shall check the installation to determine if any corrective work should be done by the State, the County, or the Municipalities Electrical Maintenance Contractor prior to the Contractor taking over the maintenance of the installation(s). The Resident Engineer, the Design Engineer, and the State, County, or Municipality Maintenance Contractor and the Contractor shall mutually agree on the date of maintenance transfer to the Contractor for this contract.

Maintenance Procedures The Contractor shall perform the following maintenance procedures for each existing installation designated to remain in operation during construction:

- Have on staff electricians with IMSA Level II certification to provide signal maintenance.
- Patrol and inspect each installation every two (2) weeks for proper alignment of signal heads, light detectors, lamp failures, and general operation of the traffic signal.
- Check all controllers every two (2) weeks, which will include visually inspecting all timing intervals, relays, detectors, and pre-emption equipment to insure that they are functioning properly. This item includes, as routine maintenance, all portions of emergency vehicle pre-emption equipment.
- Provide immediate corrective action to replace burned out lamps or damaged sockets. When lamps are replaced, the reflector and lens shall be cleaned. All replacement lamps shall meet the approval of the Engineer. The Contractor shall repair or replace all defective equipment from any cause whatsoever.
- Maintain in stock at all times a sufficient amount of materials and equipment to provide effective temporary and permanent repairs.

- Provide immediate corrective action when any part or parts of the system fail to function properly. Two far side heads facing each approach shall be considered the minimum acceptable signal operation pending permanent repairs. A near right signal must also be maintained. When repairs at a signalized intersection require that the controller be disconnected or otherwise removed from normal operation, and power is available, the Contractor shall place the traffic signal installation on flashing operation. The signals shall flash RED for all directions unless a different indication has been specified by the Engineer. The Contractor is required to place stop signs (R1-1-36) at each approach to the intersection as a temporary means of regulating traffic. At approaches, where a Yellow Flashing indication is necessary, as directed by the Engineer, stop signs will not be required. When the signals operate in flash, the Contractor shall furnish and equip all his vehicles assigned to the maintenance of traffic signal installations with a sufficient number of Stop Signs as specified herein. The Contractor shall maintain sufficient number of spare Stop Signs in stock at all times to replace Stop Signs which may be damaged or stolen.

- Replace defective or damaged equipment. If the proper sequence with full detection cannot be obtained immediately, a controller which will provide the proper sequence and full detection shall be installed within twelve (12) hours of removal of the original controller.

- The Contractor shall be required to maintain the existing type of equipment and sequence of operations during the period of time that the original control equipment is being overhauled

- Provide the Engineer with the names, addresses, and telephone numbers of two (2) persons qualified and assigned to the maintenance of the traffic signal installation. These people must be made available 24 hours per day, each and every day of the year for emergency calls by the Engineer.

- Respond to all emergency calls from the Department or others within one hour after notification and provide immediate corrective action. When equipment has been damaged or becomes faulty beyond repair, the Contractor shall replace it with new and identical equipment. The cost of furnishing and installing the replaced equipment shall be borne by the Contractor at no additional charge to the State or County. The Contractor may institute action to recover damages from a responsible third party. If at any time the Contractor fails to perform all work as specified herein to keep the traffic signal installation in proper operating condition or if the Engineer cannot contact the Contractor's designated personnel, the Engineer shall have the State's or the County's Electrical Maintenance Contractor perform the maintenance work required. The State's or County's Electrical Maintenance Contractor shall bill the Contractor for the total cost of the work. The contractor shall pay this bill within thirty (30) days of the date of receipt of the invoice or the cost of such work will be deducted from the amount due the Contractor. The Contractor shall allow the Electrical Maintenance Contractor to make reviews of the Existing Traffic Signal Installation that has been transferred to the Contractor for Maintenance.

Traffic signal equipment which is lost or not returned to the Department for any reason shall be replaced with new equipment meeting the requirements of the Standard Specifications and these special provisions.

Basis of Payment. This work will be paid for at the contract unit price EACH for MAINTENANCE OF EXISTING TRAFFIC SIGNAL INSTALLATION, which price shall be payment in full for all materials, equipment, and labor necessary to maintain the existing traffic signals as shown on the plans. Each intersection shall be paid for separately. Following the completion of the traffic signal maintenance transfer

to the Contractor, 30 percent of the bid price will be paid. Following the traffic signal maintenance transfer to County, state and/or local agency, 30 percent of the bid price will be paid. The remaining 40 percent will be paid when all items on the punch list are done to the satisfaction of the engineer.

SPECIAL PROVISION FOR TEMPORARY RAMPS

A temporary ramp of bituminous grindings derived from the HMA surface removal shall be provided at all driveways during construction operations. The minimum width of such ramp shall be 10 feet or as directed by the Engineer, compacted to the satisfaction of the Engineer.

Furnishing, maintaining, removal and disposal the temporary ramp shall not be measured or paid for separately. The cost of all necessary work shall be included in the contract unit price for HOT-MIX ASPHALT SURFACE REMOVAL of the depth specified in the plans.

HOT-MIX ASPHALT - DENSITY TESTING OF LONGITUDINAL JOINTS (BDE)

Effective: January 1, 2010
Revised: April 1, 2012

Description. This work shall consist of testing the density of longitudinal joints as part of the quality control/quality assurance (QC/QA) of hot-mix asphalt (HMA). Work shall be according to Section 1030 of the Standard Specifications except as follows.

Quality Control/Quality Assurance (QC/QA). Delete the second and third sentence of the third paragraph of Article 1030.05(d)(3) of the Standard Specifications.

Add the following paragraphs to the end of Article 1030.05(d)(3) of the Standard Specifications:

"Longitudinal joint density testing shall be performed at each random density test location. Longitudinal joint testing shall be located at a distance equal to the lift thickness or a minimum of 4 in. (100 mm), from each pavement edge. (i.e. for a 5 in. (125 mm) lift the near edge of the density gauge or core barrel shall be within 5 in. (125 mm) from the edge of pavement.) Longitudinal joint density testing shall be performed using either a correlated nuclear gauge or cores.

a. Confined Edge. Each confined edge density shall be represented by a one-minute nuclear density reading or a core density and shall be included in the average of density readings or core densities taken across the mat which represents the Individual Test.

b. Unconfined Edge. Each unconfined edge joint density shall be represented by an average of three one-minute density readings or a single core density at the given density test location and shall meet the density requirements specified herein. The three one-minute readings shall be spaced ten feet apart longitudinally along the unconfined pavement edge and centered at the random density test location."

Revise the Density Control Limits table in Article 1030.05(d)(4) of the Standard Specifications to read:

"Mixture Composition	Parameter	Individual Test (includes confined edges)	Unconfined Edge Joint Density Minimum
IL-4.75	Ndesign = 50	93.0 – 97.4%	91.0%
IL-9.5, IL-12.5	Ndesign ≥ 90	92.0 – 96.0%	90.0%
IL-9.5,IL-9.5L, IL-12.5	Ndesign < 90	92.5 – 97.4%	90.0%
IL-19.0, IL-25.0	Ndesign ≥ 90	93.0 – 96.0%	90.0%
IL-19.0, IL-19.0L, IL-25.0	Ndesign < 90	93.0 – 97.4%	90.0%

SMA	Ndesign = 50 & 80	93.5 – 97.4%	91.0%
All Other	Ndesign = 30	93.0 - 97.4%	90.0%"

80246

FINE AGGREGATE FOR HOT- MIX ASPHALT (HMA) (D-1)
Effective: May 1, 2007
Revised: January 1, 2012

Revise Article 1003.03 (c) of the Standard Specifications to read:

"(c) Gradation. The fine aggregate gradation for all HMA shall be FA1, FA 2, FA 20, FA 21 or FA 22. When Reclaimed Asphalt Pavement (RAP) is incorporated in the HMA design, the use of FA 21 Gradation will not be permitted.

HOT MIX ASPHALT MIXTURE IL-4.75 (DIST 1)
Effective: January 1, 2007
Revised: November 1, 2013

Description. This work shall consist of constructing Hot-Mix Asphalt (HMA) surface course or leveling binder with an IL-4.75 mixture. Work shall be according to Sections 406, 1030, 1031 and 1032 of the Standard Specifications except as modified herein.

Materials.

Revise Article 1030.02 (b), (c), (d) and (g) of the Standard Specifications to read:

(b) Fine aggregate (Note 1 and 5)

Note 5. The gradation for IL-4.75 shall be FA 1, FA 2, FA 20 or FA 22.

(c) Reclaimed or recycled material. Only processed FRAP or RAS will be permitted in the IL-4.75 mixture. Refer to D1 version for Reclaimed Asphalt Pavement and Reclaimed Asphalt Shingles special provision.

(d) Mineral Filler. Mineral filler shall conform to the requirements of Article 1011.01 of the Standard Specifications. Collected HMA baghouse dust may be used as Mineral Filler provided it meets the gradation outlined in Article 1011 of the Standard Specifications and a separate mix design is created.

(g) Asphalt Binder (AB). The AB shall be either Elvaloy or SBS/SBR with a PG 76-22 value. The AB shall meet the requirements of Article 1032.05(b) of the Standard Specifications; however the elastic recovery of the AB shall be 80 minimum.

The AB shall be shipped, maintained, and stored at the mix plant according to the manufacturer's requirements. It shall be placed in an empty tank and not blended with other asphalt cements.

Mixture Design. The percentage of new natural sand shall not exceed 25% if FRAP or RAS is used. For designs without FRAP or RAS the sand fraction of the final blend shall be at least 50% manufacture stone sand.

Mixture Production. Plant modifications may be required to accommodate the addition of higher percentages of mineral filler as required by the JMF.

During production, mineral filler shall not be stored in the same silo as collected dust. This may require any previously collected bag house dust in a storage silo prior to production of the IL-4.75 mixture to be wasted. Only metered bag house dust may be returned back directly to the mix. Any additional minus No. 200 (75 μm) material needed to produce the IL-4.75 shall be mineral filler.

As an option, collected bag-house dust may be used in lieu of manufactured mineral filler, provided; 1) there is enough available for the production of the IL-4.75 mix for the entire project and 2) a mix design was prepared with collected bag-house dust.

The mixture shall be produced within the temperature range recommended by the asphalt cement producer; but not less than 325 °F (165 °C).

The amount of moisture remaining in the finished mixture (at silo discharge) shall be less than 0.3 percent based on the weight of the test sample after drying.

Mixtures contain steel slag sand or aggregate having absorptions ≥ 2.5 percent shall have a silo storage plus haul time of not less than 1.5 hours.

Placement.

Revise Article 406.06 (b) (2) a. to read as follows:

"a. The surface shall be dry for at least 12 hours, and clean, prior to placement of the mixture.

As an option, the contractor will be allowed to use a heated drier, at no additional cost to the Department, to expedite the drying of the pavement. No mix will be placed in areas of standing water or areas that show evidence of moisture or dampness. The use of a heated drier will be stopped if the pavement shows signs of damaged."

HMA MIXTURE DESIGN REQUIREMENTS (D-1)

Effective: January 1, 2013
Revised: November 1, 2014

1) Design Composition and Volumetric Requirements

Revise the last sentence of the first paragraph of Article 312.05 of the Standard Specifications to read:

"The minimum compacted thickness of each lift shall be according to Article 406.06(d)."

Delete the minimum compacted lift thickness table in Article 312.05 of the Standard Specifications.

Revise the second paragraph of Article 355.02 of the Standard Specifications to read:

"The mixture composition used shall be IL-19.0."

Revise Article 355.05(a) of the Standard Specifications to read:
"(a) The top lift thickness shall be 2 1/4 in. (60 mm) for mixture composition IL-19.0."

Revise the Leveling Binder table and second paragraph of Article 406.05(c) of the Standard Specifications to read:

"Leveling Binder	
Nominal, Compacted, Leveling Binder Thickness, in. (mm)	Mixture Composition
≤ 1 1/4 (32)	IL-4.75, IL-9.5, or IL-9.5L
> 1 1/4 to 2 (32 to 50)	IL-9.5 or IL-9.5L

The density requirements of Article 406.07(c) shall apply for leveling binder, machine method, when the nominal compacted thickness is: 3/4 in. (19 mm) or greater for IL-4.75 mixtures; and 1 1/4 in. (32 mm) or greater for IL-9.5 and IL-9.5L mixtures."

Revise the table in Article 406.06(d) of the Standard Specifications to read:

"MINIMUM COMPACTED LIFT THICKNESS	
Mixture Composition	Thickness, in. (mm)
IL-4.75	3/4 (19)
SMA-9.5, IL-9.5, IL-9.5L	1 1/2 (38)
SMA-12.5	2 (50)
IL-19.0, IL-19.0L	2 1/4 (57)"

Revise the ninth paragraph of Article 406.14 of the Standard Specifications to read:
"Test strip mixture will be evaluated at the contract unit price according to the following."

Revise Article 406.14(a) of the Standard Specifications to read:

"(a) If the HMA placed during the initial test strip is determined to be acceptable the mixture will be paid for at the contract unit price."

Revise Article 406.14(b) of the Standard Specifications to read:

"(b) If the HMA placed during the initial test strip (1) is determined to be unacceptable to remain in place by the Engineer, and (2) was not produced within 2.0 to 6.0 percent air voids or within the individual control limits of the JMF according to the Department's test results, the mixture will not be paid for and shall be removed at the Contractor's expense. An additional test strip shall be constructed and the mixture will be paid for in full, if produced within 2.0 to 6.0 percent air voids and within the individual control limits of the JMF."

Revise Article 406.14(c) of the Standard Specifications to read:

"(c) If the HMA placed during the initial test strip (1) is determined to be unacceptable to remain in place by the Engineer, and (2) was produced within 2.0 to 6.0 percent air voids and within the individual control limits of the JMF according to the Department's test results, the mixture shall be removed. Removal will be paid according to Article 109.04. This initial mixture will be paid for at the contract unit price. An additional test strip shall be constructed and the mixture will be paid for in full, if produced within 2.0 to 6.0 percent air voids and within the individual control limits of the JMF."

Delete Article 406.14(d) of the Standard Specifications.

Delete Article 406.14(e) of the Standard Specifications.

Delete the last sentence of Article 407.06(c) of the Standard Specifications.

Revise Note 2. of Article 442.02 of the Standard Specifications to read:

"Note 2. The mixture composition of the HMA used shall be IL-19.0 binder, designed with the same Ndesign as that specified for the mainline pavement."

Delete the second paragraph of Article 482.02 of the Standard Specifications.

Revise the first sentence of the sixth paragraph of Article 482.05 of the Standard Specifications to read:

"When the mainline HMA binder and surface course mixture option is used on resurfacing projects, shoulder resurfacing widths of 6 ft (1.8 m) or less may be placed simultaneously with the adjacent traffic lane for both the binder and surface courses."

Revise the second sentence of the fourth paragraph of Article 601.04 of the Standard Specifications to read:

"The top 5 in. (125 mm) of the trench shall be backfilled with an IL-19.0L Low ESAL mixture meeting the requirements of Section 1030 and compacted to a density of not less than 90 percent of the theoretical density."

Revise the second sentence of the fifth paragraph of Article 601.04 of the Standard Specifications to read:

"The top 8 in. (200 mm) of the trench shall be backfilled with an IL-19.0L Low ESAL mixture meeting the requirements of Section 1030 and compacted to a density of not less than 90 percent of the theoretical density."

Revise Article 1003.03(c) of the Standard Specifications to read:

"(c) Gradation. The fine aggregate gradation for all HMA shall be FA 1, FA 2, FA 20, FA 21, or FA 22. The fine aggregate gradation for SMA shall be FA/FM 20.

For mixture IL-4.75 and surface mixtures with an Ndesign = 90, at least 50 percent of the required fine aggregate fraction shall consist of either stone sand, slag sand, or steel slag meeting the FA 20 gradation.

For mixture IL-19.0, Ndesign = 90 the fine aggregate fraction shall consist of at least 67 percent manufactured sand meeting FA 20 or FA 22 gradation. For mixture IL-19.0, Ndesign = 50 or 70 the fine aggregate fraction shall consist of at least 50 percent manufactured sand meeting FA 20 or FA 22 gradation. The manufactured sand shall be stone sand, slag sand, steel slag sand, or combinations thereof.

Gradation FA 1, FA 2, or FA 3 shall be used when required for prime coat aggregate application for HMA."

Delete the last sentence of the first paragraph of Article 1004.03(b) of the Standard Specifications.

Revise the table in Article 1004.03(c) of the Standard Specifications to read:

"Use	Size/Application	Gradation No.
Class A-1, 2, & 3	3/8 in. (10 mm) Seal	CA 16
Class A-1	1/2 in. (13 mm) Seal	CA 15
Class A-2 & 3	Cover	CA 14
HMA High ESAL	IL-19.0 IL-9.5	CA 11 [1/] CA 16, CA 13[3/]
HMA Low ESAL	IL-19.0L IL-9.5L Stabilized Subbase or Shoulders	CA 11 [1/] CA 16
SMA[2/]	1/2 in. (12.5mm) Binder & Surface IL 9.5 Surface	CA13[3/], CA14 or CA16 CA16, CA 13[3/]

1/ CA 16 or CA 13 may be blended with the gradations listed.

2/ The coarse aggregates used shall be capable of being combined with stone sand, slag sand, or steel slag sand meeting the FA/FM 20 gradation and mineral filler to meet the approved mix design and the mix requirements noted herein.

3/ CA 13 shall be 100 percent passing the 1/2 in. (12.5mm) sieve.

Revise Article 1004.03(e) of the Supplemental Specifications to read:

"(e) Absorption. For SMA the coarse aggregate shall also have water absorption ≤ 2.0 percent."

Revise the nomenclature table in Article 1030.01 of the Standard Specifications to read:

"High ESAL	IL-19.0 binder; IL-9.5 surface; IL-4.75; SMA-12.5, SMA-9.5
Low ESAL	IL-19.0L binder; IL-9.5L surface; Stabilized Subbase (HMA)[1/]; HMA Shoulders[2/]

1/ Uses 19.0L binder mix.

2/ Uses 19.0L for lower lifts and 9.5L for surface lift."

Revise Article 1030.02 of the Standard Specifications and Supplemental Specifications to read:

"**1030.02 Materials.** Materials shall be according to the following.

Item	Article/Section
(a) Coarse Aggregate	1004.03
(b) Fine Aggregate	1003.03
(c) RAP Material	1031
(d) Mineral Filler	1011
(e) Hydrated Lime	1012.01
(f) Slaked Quicklime (Note 1)	
(g) Performance Graded Asphalt Binder (Note 2)	1032
(h) Fibers (Note 3)	
(i) Warm Mix Asphalt (WMA) Technologies (Note 4)	

Note 1. Slaked quicklime shall be according to ASTM C 5.

Note 2. The asphalt binder shall be an SBS PG 76-28 when the SMA is used on a full-depth asphalt pavement and SBS PG 76-22 when used as an overlay, except where modified herein. The asphalt binder shall be an Elvaloy or SBS PG 76-22 for IL-4.75, except where modified herein. The elastic recovery shall be a minimum of 80.

Note 3. A stabilizing additive such as cellulose or mineral fiber shall be added to the SMA mixture according to Illinois Modified AASHTO M 325. The stabilizing additive

shall meet the Fiber Quality Requirements listed in Illinois Modified AASHTO M 325. Prior to approval and use of fibers, the Contractor shall submit a notarized certification by the producer of these materials stating they meet these requirements. Reclaimed Asphalt Shingles (RAS) may be used in Stone Matrix Asphalt (SMA) mixtures designed with an SBA polymer modifier as a fiber additive if the mix design with RAS included meets AASHTO T305 requirements. The RAS shall be from a certified source that produces either Type I or Type 2. Material shall meet requirements noted herein and the actual dosage rate will be determined by the Engineer.

Note 4. Warm mix additives or foaming processes shall be selected from the current Bureau of Materials and Physical Research Approved List, "Warm Mix Asphalt Technologies"."

Revise Article 1030.04(a)(1) of the Standard Specifications and the Supplemental Specifications to read:

"(1) High ESAL Mixtures. The Job Mix Formula (JMF) shall fall within the following limits.

High ESAL, MIXTURE COMPOSITION (% PASSING) 1/										
Sieve Size	IL-19.0 mm		SMA 4/ IL-12.5 mm		SMA 4/ IL-9.5 mm		IL-9.5 mm		IL-4.75 mm	
	min	max	min	max	min	max	min	max	min	max
1 1/2 in (37.5 mm)										
1 in. (25 mm)		100								
3/4 in. (19 mm)	90	100		100						
1/2 in. (12.5 mm)	75	89	80	100		100		100		100
3/8 in. (9.5 mm)				65	90	100	90	100		100
#4 (4.75 mm)	40	60	20	30	36	50	34	69	90	100
#8 (2.36 mm)	20	42	16	24 5/	16	32 5/	34 6/	52 2/	70	90
#16 (1.18 mm)	15	30					10	32	50	65
#30 (600 µm)			12	16	12	18				
#50 (300 µm)	6	15					4	15	15	30
#100 (150 µm)	4	9					3	10	10	18
#200 (75 µm)	3	6	7.0	9.0 3/	7.5	9.5 3/	4	6	7	9 3/
Ratio Dust/Asphalt Binder		1.0		1.5		1.5		1.0		1.0

1/ Based on percent of total aggregate weight.

2/ The mixture composition shall not exceed 44 percent passing the #8 (2.36 mm) sieve for surface courses with Ndesign = 90.

3/ Additional minus No. 200 (0.075 mm) material required by the mix design shall be mineral filler, unless otherwise approved by the Engineer.

4/ The maximum percent passing the #635 (20 µm) sieve shall be ≤ 3 percent.

5/ When establishing the Adjusted Job Mix Formula (AJMF) the percent passing the #8 (2.36 mm) sieve shall not be adjusted above the percentage stated on the table.

6/ When establishing the Adjusted Job Mix Formula (AJMF) the percent passing the #8 (2.36 mm) sieve shall not be adjusted below 34 percent.

Delete Article 1030.04(a)(3) of the Standard Specifications.

Delete Article 1030.04(a)(4) of the Standard Specifications.

Revise Article 1030.04(b)(1) of the Standard Specifications to read:

"(1) High ESAL Mixtures. The target value for the air voids of the HMA shall be 4.0 percent and for IL-4.75 it shall be 3.5 percent at the design number of gyrations. The VMA and VFA of the HMA design shall be based on the nominal maximum size of the aggregate in the mix, and shall conform to the following requirements.

VOLUMETRIC REQUIREMENTS High ESAL				
	Voids in the Mineral Aggregate (VMA), % minimum			Voids Filled with Asphalt Binder (VFA), %
Ndesign	IL-19.0	IL-9.5	IL-4.75 1/	
50	13.5	15.0	18.5	65 – 78 2/
70				65 - 75
90				

1/ Maximum Draindown for IL-4.75 shall be 0.3 percent

2/ VFA for IL-4.75 shall be 72-85 percent"

Revise the table in Article 1030.04(b)(2) of the Standard Specifications to read:

"VOLUMETRIC REQUIREMENTS Low ESAL				
Mixture Composition	Design Compactive Effort	Design Air Voids Target %	VMA (Voids in the Mineral Aggregate), % min.	VFA (Voids Filled with Asphalt Binder), %
IL-9.5L	N_{DES} =30	4.0	15.0	65-78
IL-19.0L	N_{DES} =30	4.0	13.5	N/A"

Replace Article 1030.04(b)(3) of the Standard Specifications with the following:

"(3) SMA Mixtures.

Volumetric Requirements SMA 1/			
Ndesign	Design Air Voids Target %	Voids in the Mineral Aggregate (VMA), % min.	Voids Filled with Asphalt (VFA), %
80 4/	3.5	17.0 2/	75 - 83
		16.0 3/	

1/ Maximum draindown shall be 0.3 percent. The draindown shall be determined at the JMF asphalt binder content at the mixing temperature plus 30 °F.

2/ Applies when specific gravity of coarse aggregate is ≥ 2.760.

3/ Applies when specific gravity of coarse aggregate is < 2.760.

4/ Blending of different types of aggregate will not be permitted.
For surface course, the coarse aggregate can be crushed steel slag, crystalline crushed stone or crushed sandstone. For binder course, coarse aggregate shall be crushed stone (dolomite), crushed gravel, crystalline crushed stone, or crushed sandstone.

Delete Article 1030.04(b)(4) of the Standard Specifications.

Delete Article 1030.04(b)(5) from the Supplemental Specifications.

Delete last sentence of the second paragraph of Article 1102.01(a) (13) a.

Add to second paragraph in Article 1102.01 (a) (13) a.:

"As an option, collected bag-house dust may be used in lieu of manufactured mineral filler, provided; 1) there is enough available for the production of the SMA mix for the entire project and 2) a mix design was prepared with collected bag-house dust."

Revise the table in Article 1030.05(d)(2)a. of the Standard Specifications to read:

"Parameter	Frequency of Tests High ESAL Mixture Low ESAL Mixture	Test Method See Manual of Test Procedures for Materials
Aggregate Gradation % passing sieves: 1/2 in. (12.5 mm), No. 4 (4.75 mm), No. 8 (2.36 mm), No. 30 (600 µm) No. 200 (75 µm)	1 washed ignition oven test on the mix per half day of production Note 3.	Illinois Procedure
Asphalt Binder Content by Ignition Oven Note 1.	1 per half day of production	Illinois-Modified AASHTO T 308
VMA Note 2.	Day's production ≥ 1200 tons: 1 per half day of production	Illinois-Modified AASHTO R 35
	Day's production < 1200 tons: 1 per half day of production for first 2 days and 1 per day thereafter (first sample of the day)	
Air Voids Bulk Specific Gravity of Gyratory Sample Note 4.	Day's production ≥ 1200 tons: 1 per half day of production	Illinois-Modified AASHTO T 312
	Day's production < 1200 tons: 1 per half day of production for first 2 days and 1 per day thereafter (first sample of the day)	
Maximum Specific Gravity of Mixture	Day's production ≥ 1200 tons: 1 per half day of production	Illinois-Modified AASHTO T 209
	Day's production < 1200 tons: 1 per half day of production for first 2 days and 1 per day thereafter (first sample of the day)	

Note 1. The Engineer may waive the ignition oven requirement for asphalt binder content if the aggregates to be used are known to have ignition asphalt binder content calibration factors which exceed 1.5 percent. If the ignition oven requirement is waived, other Department approved methods shall be used to determine the asphalt binder content.

Note 2. The G_{sb} used in the voids in the mineral aggregate (VMA) calculation shall be the same average G_{sb} value listed in the mix design.

Note 3. The Engineer reserves the right to require additional hot bin gradations for batch plants if control problems are evident.

Note 4. The WMA compaction temperature for mixture volumetric testing shall be 270 ± 5 °F (132 ± 3 °C) for quality control testing. The WMA compaction temperature for quality assurance testing will be 270 ± 5 °F (132 ± 3 °C) if the mixture is not allowed to cool to room temperature. If the mixture is allowed to cool to room temperature, it shall be reheated to standard HMA compaction temperatures."

Revise the table in Article 1030.05(d)(2)b. of the Standard Specifications to read:

"Parameter	High ESAL Mixture Low ESAL Mixture
Ratio Dust/Asphalt Binder	0.6 to 1.2
Moisture	0.3 %"

Revise the Article 1030.05(d)(4) of the Supplemental Specifications to read:

"(4) Control Limits. Target values shall be determined by applying adjustment factors to the AJMF where applicable. The target values shall be plotted on the control charts within the following control limits.

"CONTROL LIMITS						
Parameter	High ESAL		SMA		IL-4.75	
	Individual Test	Moving Avg. of 4	Test	Moving Avg. of 4	Individual Test	Moving Avg. of 4
% Passing: 1/						
1/2 in. (12.5 mm)	± 6 %	± 4 %	± 6 %	± 4 %		
3/8 in. (9.5mm)			± 4 %	± 3 %		
No. 4 (4.75 mm)	± 5 %	± 4 %	± 5 %	± 4 %		
No. 8 (2.36 mm)	± 5 %	± 3 %	± 4 %	± 2 %		
No. 16 (1.18 mm)			± 4 %	± 2 %	± 4 %	± 3 %
No. 30 (600 µm)	± 4 %	± 2.5 %	± 4 %	± 2.5 %		
Total Dust Content No. 200 (75 µm)	± 1.5 %	± 1.0 %			± 1.5 %	± 1.0 %
Asphalt Binder Content	± 0.3 %	± 0.2 %	± 0.2 %	± 0.1 %	± 0.3 %	± 0.2 %
Voids	± 1.2 %	± 1.0 %	± 1.2 %	± 1.0 %	± 1.2 %	± 1.0 %
VMA	-0.7 % 2/	-0.5 % 2/	-0.7 % 2/	-0.5 % 2/	-0.7 % 2/	-0.5 % 2/

1/ Based on washed ignition oven

2/ Allowable limit below minimum design VMA requirement

DENSITY CONTROL LIMITS		
Mixture Composition	Parameter	Individual Test
IL-4.75	Ndesign = 50	93.0 - 97.4 % 1/
IL-9.5	Ndesign = 90	92.0 - 96.0 %
IL-9.5,IL-9.5L	Ndesign < 90	92.5 - 97.4 %
IL-19.0	Ndesign = 90	93.0 - 96.0 %
IL-19.0, IL-19.0L	Ndesign < 90	93.0 2/- 97.4 %
SMA	Ndesign = 80	93.5 - 97.4 %

1/ Density shall be determined by cores or by correlated, approved thin lift nuclear gauge.

2/ 92.0 % when placed as first lift on an unimproved subgrade."

Revise the table in Article 1030.05(d)(5) of the Supplemental Specifications to read:

"CONTROL CHART REQUIREMENTS	High ESAL, Low ESAL, SMA & IL-4.75
Gradation 1/ 3/	% Passing Sieves: 1/2 in. (12.5 mm) 2/ No. 4 (4.75 mm) No. 8 (2.36 mm) No. 30 (600 µm)
Total Dust Content 1/	No. 200 (75 µm)
	Asphalt Binder Content
	Bulk Specific Gravity
	Maximum Specific Gravity of Mixture
	Voids
	Density
	VMA

1/ Based on washed ignition oven.

2/ Does not apply to IL-4.75.

3/ SMA also requires the 3/8 in. (9.5 mm) sieve."

Delete Article 1030.05(d)(6)a.1.(b.) of the Standard Specifications.

Delete Article 1030.06(b) of the Standard Specifications.

Delete Article 1102.01(e) of the Standard Specifications.

2) Design Verification and Production

Description. The following states the requirements for Hamburg Wheel and Tensile Strength testing for High ESAL, IL-4.75, and Stone Matrix Asphalt (SMA) hot-mix asphalt (HMA) mixes during mix design verification and production.

Mix Design Testing. Add the following below the referenced AASHTO standards in Article 1030.04 of the Standard Specifications:

AASHTO T 324 Hamburg Wheel Test

AASHTO T 283 Tensile Strength Test

Add the following to Article 1030.04 of the Standard Specifications:

"(d) Verification Testing. High ESAL, IL-4.75, and SMA mix designs submitted for verification will be tested to ensure that the resulting mix designs will pass the required criteria for the Hamburg Wheel Test (IL mod AASHTO T-324) and the

Tensile Strength Test (IL mod AASHTO T-283). The Department will perform a verification test on gyratory specimens compacted by the Contractor. If the mix fails the Department's verification test, the Contractor shall make the necessary changes to the mix and resubmit compacted specimens to the Department for verification. If the mix fails again, the mix design will be rejected.

All new and renewal mix designs will be required to be tested, prior to submittal for Department verification and shall meet the following requirements:

(1)Hamburg Wheel Test criteria. The maximum allowable rut depth shall be 0.5 in. (12.5 mm). The minimum number of wheel passes at the 0.5 in. (12.5 mm) rut depth criteria shall be based on the high temperature binder grade of the mix as specified in the mix requirements table of the plans.

Illinois Modified AASHTO T 324 Requirements [1/]

Asphalt Binder Grade	# Repetitions	Max Rut Depth (mm)
PG 70 -XX (or higher)	20,000	12.5
PG 64 -XX (or lower)	10,000	12.5

1/ When produced at temperatures of 275 ± 5 °F (135 ± 3 °C) or less, loose Warm Mix Asphalt shall be oven aged at 270 ± 5 °F (132 ± 3 °C) for two hours prior to gyratory compaction of Hamburg Wheel specimens.

Note: For SMA Designs (N-80) the maximum rut depth is 6.0 mm at 20,000 repetitions.
For IL 4.75mm Designs (N-50) the maximum rut depth is 9.0mm at 15,000 repetitions.

(2) Tensile Strength Criteria. The minimum allowable conditioned tensile strength shall be 60 psi (415 kPa) for non-polymer modified performance graded (PG) asphalt binder and 80 psi (550 kPa) for polymer modified PG asphalt binder. The maximum allowable unconditioned tensile strength shall be 200 psi (1380 kPa)."

Production Testing. Revise Article 1030.06(a) of the Standard Specifications to read:

"(a) High ESAL, IL-4.75, WMA, and SMA Mixtures. For each contract, a 300 ton (275 metric tons) test strip, except for SMA mixtures it will be 400 ton (363 metric ton), will be required at the beginning of HMA production for each mixture with a quantity of 3000 tons (2750 metric tons) or more according to the Manual of Test Procedures for Materials "Hot Mix Asphalt Test Strip Procedures".

Before start-up, target values shall be determined by applying gradation correction factors to the JMF when applicable. These correction factors shall be determined from previous experience. The target values, when approved by the Engineer, shall be used to control HMA production. Plant settings and control charts shall be set according to target values.

Before constructing the test strip, target values shall be determined by applying gradation correction factors to the JMF when applicable. After any JMF adjustment, the JMF shall become the Adjusted Job Mix Formula (AJMF). Upon completion of the first acceptable test strip, the JMF shall become the AJMF regardless of whether or not the JMF has been adjusted. If an adjustment/plant change is made, the Engineer may require a new test strip to be constructed. If the HMA placed during the initial test strip is determined to be unacceptable to remain in place by the Engineer, it shall be removed and replaced.

The limitations between the JMF and AJMF are as follows.

Parameter	Adjustment
1/2 in. (12.5 mm)	± 5.0 %
No. 4 (4.75 mm)	± 4.0 %
No. 8 (2.36 mm)	± 3.0 %
No. 30 (600 µm)	*
No. 200 (75 µm)	*
Asphalt Binder Content	± 0.3 %

* In no case shall the target for the amount passing be greater than the JMF.

Any adjustments outside the above limitations will require a new mix design.

Mixture sampled to represent the test strip shall include additional material sufficient for the Department to conduct Hamburg Wheel testing according to Illinois Modified AASHTO T324 (approximately 60 lb (27 kg) total).

The Contractor shall immediately cease production upon notification by the Engineer of failing Hamburg Wheel test. All prior produced material may be paved out provided all other mixture criteria is being met. No additional mixture shall be produced until the Engineer receives passing Hamburg Wheel tests.

The Department may conduct additional Hamburg Wheel tests on production material as determined by the Engineer."

Revise the title of Article 1030.06(b) of the Standard Specifications to read:

"(b) Low ESAL Mixtures."

Add the following to Article 1030.06 of the Standard Specifications:

"(c) Hamburg Wheel Test. All HMA mixtures shall be sampled within the first 500 tons (450 metric tons) on the first day of production or during start up with a split reserved for the Department. The mix sample shall be tested according to the Illinois Modified AASHTO T 324 and shall meet the requirements specified herein. Mix production shall not exceed 1500 tons (1350 metric tons) or one day's production, whichever comes first, until the testing is completed and the mixture is found to be in conformance. The

requirement to cease mix production may be waived if the plant produced mixture demonstrates conformance prior to start of mix production for a contract.
The Department may conduct additional Hamburg Wheel Tests on production material as determined by the Engineer. If the mixture fails to meet the Hamburg Wheel criteria, no further mixture will be accepted until the Contractor takes such action as is necessary to furnish a mixture meeting the criteria"

The Contractor shall immediately cease production upon notification by the Engineer of failing Hamburg Wheel test. All prior produced material may be paved out provided all other mixture criteria are being met. No additional mixture shall be produced until the Engineer receives passing Hamburg Wheel tests.

Method of Measurement:

Add the following after the fourth paragraph of Article 406.13 (b):

"The plan quantities of SMA mixtures shall be adjusted using the actual approved binder and surface Mix Design's G_{mb}."

Basis of Payment.

Replace the seventh paragraph of Article 406.14 of the Standard Specifications with the following:

"For all mixes designed and verified under the Hamburg Wheel criteria, the cost of furnishing and introducing anti-stripping additives in the HMA will not be paid for separately, but shall be considered as included in the contract unit price of the HMA item involved.

No additional compensation will be awarded to the Contractor because of reduced production rates associated with the addition of the anti-stripping additive."

RECLAIMED ASPHALT PAVEMENT AND RECLAIMED ASPHALT SHINGLES (D-1)

Effective: November 1, 2012
Revise: August 15, 2014

Revise Section 1031 of the Standard Specifications to read:

"SECTION 1031. RECLAIMED ASPHALT PAVEMENT AND RECLAIMED ASPHALT SHINGLES

1031.01 Description. Reclaimed asphalt pavement and reclaimed asphalt shingles shall be according to the following.

(a) Reclaimed Asphalt Pavement (RAP). RAP is the material resulting from cold milling or crushing an existing hot-mix asphalt (HMA) pavement. RAP will be considered processed FRAP after completion of both crushing and screening to size. The Contractor shall supply written documentation that the RAP originated from routes or airfields under federal, state, or local agency jurisdiction.

(b) Reclaimed Asphalt Shingles (RAS). Reclaimed asphalt shingles (RAS). RAS is from the processing and grinding of preconsumer or post-consumer shingles. RAS shall be a clean and uniform material with a maximum of 0.5 percent unacceptable material, as defined in Bureau of Materials and Physical Research Policy Memorandum "Reclaimed Asphalt Shingle (RAS) Sources", by weight of RAS. All RAS used shall come from a Bureau of Materials and Physical Research approved processing facility where it shall be ground and processed to 100 percent passing the 3/8 in. (9.5 mm) sieve and 90 percent passing the #4 (4.75 mm) sieve . RAS shall meet the testing requirements specified herein. In addition, RAS shall meet the following Type 1 or Type 2 requirements.

(1) Type 1. Type 1 RAS shall be processed, preconsumer asphalt shingles salvaged from the manufacture of residential asphalt roofing shingles.

(2) Type 2. Type 2 RAS shall be processed post-consumer shingles only, salvaged from residential, or four unit or less dwellings not subject to the National Emission Standards for Hazardous Air Pollutants (NESHAP).

1031.02 Stockpiles. RAP and RAS stockpiles shall be according to the following.

(a) RAP Stockpiles. The Contractor shall construct individual, sealed RAP stockpiles meeting one of the following definitions. Additional processed RAP (FRAP) shall be stockpiled in a separate working pile, as designated in the QC Plan, and only added to the sealed stockpile when test results for the working pile are complete and are found to meet tolerances specified herein for the original sealed FRAP stockpile. Stockpiles shall be sufficiently separated to prevent intermingling at the base. All stockpiles (including

unprocessed RAP and FRAP) shall be identified by signs indicating the type as listed below (i.e. "Non- Quality, FRAP -#4 or Type 2 RAS", etc...).

(1) Fractionated RAP (FRAP). FRAP shall consist of RAP from Class I, Superpave HMA (High and Low ESAL) or equivalent mixtures. The coarse aggregate in FRAP shall be crushed aggregate and may represent more than one aggregate type and/or quality but shall be at least C quality. All FRAP shall be processed prior to testing and sized into fractions with the separation occurring on or between the #4 (4.75 mm) and 1/2 in. (12.5 mm) sieves. Agglomerations shall be minimized such that 100 percent of the RAP in the coarse fraction shall pass the maximum sieve size specified for the mix the FRAP will be used in.

(2) Restricted FRAP (B quality) stockpiles shall consist of RAP from Class I, Superpave (High ESAL), or HMA (High ESAL). If approved by the Engineer, the aggregate from a maximum 3.0 inch single combined pass of surface/binder milling will be classified as B quality. All millings from this application will be processed into FRAP as described previously.

(3) Conglomerate. Conglomerate RAP stockpiles shall consist of RAP from Class I, Superpave HMA (High and Low ESAL) or equivalent mixtures. The coarse aggregate in this RAP shall be crushed aggregate and may represent more than one aggregate type and/or quality but shall be at least C quality. This RAP may have an inconsistent gradation and/or asphalt binder content prior to processing. All conglomerate RAP shall be processed (FRAP) prior to testing. Conglomerate RAP stockpiles shall not contain steel slag or other expansive material as determined by the Department.

(4) Conglomerate "D" Quality (DQ). Conglomerate DQ RAP stockpiles shall consist of RAP from HMA shoulders, bituminous stabilized subbases or Superpave (Low ESAL)/HMA (Low ESAL) IL-19.0L binder mixture. The coarse aggregate in this RAP may be crushed or round but shall be at least D quality. This RAP may have an inconsistent gradation and/or asphalt binder content. Conglomerate DQ RAP stockpiles shall not contain steel slag or other expansive material as determined by the Department.

(5) Non-Quality. RAP stockpiles that do not meet the requirements of the stockpile categories listed above shall be classified as "Non-Quality".

RAP or FRAP containing contaminants, such as earth, brick, sand, concrete, sheet asphalt, bituminous surface treatment (i.e. chip seal), pavement fabric, joint sealants, plant cleanout etc., will be unacceptable unless the contaminants are removed to the satisfaction of the Engineer. Sheet asphalt shall be stockpiled separately.

(b) RAS Stockpiles. Type 1 and Type 2 RAS shall be stockpiled separately and shall be sufficiently separated to prevent intermingling at the base. Each stockpile shall be signed indicating what type of RAS is present.

However, a RAS source may submit a written request to the Department for approval to blend mechanically a specified ratio of type 1 RAS with type 2 RAS. The source will not be permitted to change the ratio of the blend without the Department prior written approval. The Engineer's written approval will be required, to mechanically blend RAS with any fine aggregate produced under the AGCS, up to an equal weight of RAS, to improve workability. The fine aggregate shall be "B Quality" or better from an approved Aggregate Gradation Control System source. The fine aggregate shall be one that is approved for use in the HMA mixture and accounted for in the mix design and during HMA production.

Records identifying the shingle processing facility supplying the RAS, RAS type and lot number shall be maintained by project contract number and kept for a minimum of three years.

1031.03 Testing. FRAP and RAS testing shall be according to the following.

(a) FRAP Testing. When used in HMA, the FRAP shall be sampled and tested either during processing or after stockpiling. It shall also be sampled during HMA production.

(1) During Stockpiling. For testing during stockpiling, washed extraction samples shall be run at the minimum frequency of one sample per 500 tons (450 metric tons) for the first 2000 tons (1800 metric tons) and one sample per 2000 tons (1800 metric tons) thereafter. A minimum of five tests shall be required for stockpiles less than 4000 tons (3600 metric tons).

(2) Incoming Material. For testing as incoming material, washed extraction samples shall be run at a minimum frequency of one sample per 2000 tons (1800 metric tons) or once per week, whichever comes first.

(3) After Stockpiling. For testing after stockpiling, the Contractor shall submit a plan for approval to the District proposing a satisfactory method of sampling and testing the RAP/FRAP pile either in-situ or by restockpiling. The sampling plan shall meet the minimum frequency required above and detail the procedure used to obtain representative samples throughout the pile for testing.

Before extraction, each field sample of FRAP, shall be split to obtain two samples of test sample size. One of the two test samples from the final split shall be labeled and stored for Department use. The Contractor shall extract the other test sample according to Department procedure. The Engineer reserves the right to test any sample (split or Department-taken) to verify Contractor test results.

(b) RAS Testing. RAS shall be sampled and tested during stockpiling according to Bureau of Materials and Physical Research Policy Memorandum, "Reclaimed Asphalt Shingle (RAS) Sources". The Contractor shall also sample as incoming material at the HMA plant.

(1) During Stockpiling. Washed extraction and testing for unacceptable materials shall be run at the minimum frequency of one sample per 200 tons (180 metric tons) for the first 1000 tons (900 metric tons) and one sample per 1000 tons (900 metric tons) thereafter. A minimum of five samples are required for stockpiles less than 1000 tons (900 metric tons). Once a ≤ 1000 ton (900 metric ton), five-sample/test stockpile has been established it shall be sealed. Additional incoming RAS shall be in a separate working pile as designated in the Quality Control plan and only added to the sealed stockpile when the test results of the working pile are complete and are found to meet the tolerances specified herein for the original sealed RAS stockpile.

(2) Incoming Material. For testing as incoming material at the HMA plant, washed extraction shall be run at the minimum frequency of one sample per 250 tons (227 metric tons). A minimum of five samples are required for stockpiles less than 1000 tons (900 metric tons). The incoming material test results shall meet the tolerances specified herein.

The Contractor shall obtain and make available all test results from start of the initial stockpile sampled and tested at the shingle processing facility in accordance with the facility's QC Plan.

Before extraction, each field sample shall be split to obtain two samples of test sample size. One of the two test samples from the final split shall be labeled and stored for Department use. The Contractor shall extract the other test sample according to Department procedures. The Engineer reserves the right to test any sample (split or Department-taken) to verify Contractor test results.

1031.04 Evaluation of Tests. Evaluation of tests results shall be according to the following.

(a) Evaluation of FRAP Test Results. All test results shall be compiled to include asphalt binder content, gradation and, when applicable (for slag), G_{mm}. A five test average of results from the original pile will be used in the mix designs. Individual extraction test results run thereafter, shall be compared to the average used for the mix design, and will be accepted if within the tolerances listed below.

Parameter	FRAP
No. 4 (4.75 mm)	± 6 %
No. 8 (2.36 mm)	± 5 %
No. 30 (600 µm)	± 5 %
No. 200 (75 µm)	± 2.0 %
Asphalt Binder	± 0.3 %
G_{mm}	± 0.03 [1/]

1/ For stockpile with slag or steel slag present as determined in the current Manual of Test Procedures Appendix B 21, "Determination of Reclaimed Asphalt Pavement Aggregate Bulk Specific Gravity".

If any individual sieve and/or asphalt binder content tests are out of the above tolerances when compared to the average used for the mix design, the FRAP stockpile shall not be used in Hot-Mix Asphalt unless the FRAP representing those tests is removed from the stockpile. All test data and acceptance ranges shall be sent to the District for evaluation.

The Contractor shall maintain a representative moving average of five tests to be used for Hot-Mix Asphalt production.

With the approval of the Engineer, the ignition oven may be substituted for extractions according to the Illinois Test Procedure, "Calibration of the Ignition Oven for the Purpose of Characterizing Reclaimed Asphalt Pavement (RAP)" or Illinois Modified AASHTO T-164-11, Test Method A.

(b) Evaluation of RAS Test Results. All of the test results, with the exception of percent unacceptable materials, shall be compiled and averaged for asphalt binder content and gradation. A five test average of results from the original pile will be used in the mix designs. Individual test results run thereafter, when compared to the average used for the mix design, will be accepted if within the tolerances listed below.

Parameter	RAS
No. 8 (2.36 mm)	± 5 %
No. 16 (1.18 mm)	± 5 %
No. 30 (600 µm)	± 4 %
No. 200 (75 µm)	± 2.5 %
Asphalt Binder Content	± 2.0 %

If any individual sieve and/or asphalt binder content tests are out of the above tolerances when compared to the average used for the mix design, the RAS shall not be used in Hot-Mix Asphalt unless the RAS representing those tests is removed from the stockpile. All test data and acceptance ranges shall be sent to the District for evaluation.

(c) Quality Assurance by the Engineer. The Engineer may witness the sampling and splitting conduct assurance tests on split samples taken by the Contractor for quality control testing a minimum of once a month.

The overall testing frequency will be performed over the entire range of Contractor samples for asphalt binder content and gradation. The Engineer may select any or all split samples for assurance testing. The test results will be made available to the Contractor as soon as they become available.

The Engineer will notify the Contractor of observed deficiencies.

Differences between the Contractor's and the Engineer's split sample test results will be considered acceptable if within the following limits.

Test Parameter	Acceptable Limits of Precision	
% Passing:[1/]	FRAP	RAS
1 / 2 in.	5.0%	
No. 4	5.0%	
No. 8	3.0%	4.0%
No. 30	2.0%	3.0%
No. 200	2.2%	2.5%
Asphalt Binder Content	0.3%	1.0%
G_{mm}	0.030	

1/ Based on washed extraction.

In the event comparisons are outside the above acceptable limits of precision, the Engineer will immediately investigate.

(d) Acceptance by the Engineer. Acceptable of the material will be based on the validation of the Contractor's quality control by the assurance process.

1031.05 Quality Designation of Aggregate in RAP and FRAP.

(a) RAP. The aggregate quality of the RAP for homogenous, conglomerate, and conglomerate "D" quality stockpiles shall be set by the lowest quality of coarse aggregate in the RAP stockpile and are designated as follows.

(1) RAP from Class I, Superpave/HMA (High ESAL), or (Low ESAL) IL-9.5L surface mixtures are designated as containing Class B quality coarse aggregate.

(2) RAP from Superpave/HMA (Low ESAL) IL-19.0L binder mixture is designated as Class D quality coarse aggregate.

(3) RAP from Class I, Superpave/HMA (High ESAL) binder mixtures, bituminous base course mixtures, and bituminous base course widening mixtures are designated as containing Class C quality coarse aggregate.

(4) RAP from bituminous stabilized subbase and BAM shoulders are designated as containing Class D quality coarse aggregate.

(b) FRAP. If the Engineer has documentation of the quality of the FRAP aggregate, the Contractor shall use the assigned quality provided by the Engineer.

If the quality is not known, the quality shall be determined as follows. Fractionated RAP stockpiles containing plus #4 (4.75 mm) sieve coarse aggregate shall have a maximum tonnage of 5,000 tons (4,500 metric tons). The Contractor shall obtain a representative sample witnessed by the Engineer. The sample shall be a minimum of 50 lb (25 kg). The sample shall be extracted according to Illinois Modified AASHTO T 164 by a consultant prequalified by the Department for the specified testing. The consultant shall submit the test results along with the recovered aggregate to the District Office. The cost for this testing shall be paid by the Contractor. The District will forward the sample to the BMPR Aggregate Lab for MicroDeval Testing, according to Illinois Modified AASHTO T 327. A maximum loss of 15.0 percent will be applied for all HMA applications. The fine aggregate portion of the fractionated RAP shall not be used in any HMA mixtures that require a minimum of "B" quality aggregate or better, until the coarse aggregate fraction has been determined to be acceptable thru a MicroDeval Testing.

1031.06 Use of FRAP and/or RAS in HMA. The use of FRAP and/or RAS shall be a Contractor's option when constructing HMA in all contracts.

(a) FRAP. The use of FRAP in HMA shall be as follows.

(1) Coarse Aggregate Size (after extraction). The coarse aggregate in all FRAP shall be equal to or less than the nominal maximum size requirement for the HMA mixture to be produced.

(2) Steel Slag Stockpiles. FRAP stockpiles containing steel slag or other expansive material, as determined by the Department, shall be homogeneous and will be approved for use in HMA (High ESAL and Low ESAL) mixtures regardless of lift or mix type.

(3) Use in HMA Surface Mixtures (High and Low ESAL). FRAP stockpiles for use in HMA surface mixtures (High and Low ESAL) shall have coarse aggregate that is Class B quality or better. FRAP shall be considered equivalent to limestone for frictional considerations unless produced/screened to minus 3/8 inch.

(4) Use in HMA Binder Mixtures (High and Low ESAL), HMA Base Course, and HMA Base Course Widening. FRAP stockpiles for use in HMA binder mixtures (High and Low ESAL), HMA base course, and HMA base course widening shall be FRAP in which the coarse aggregate is Class C quality or better.

(5) Use in Shoulders and Subbase. FRAP stockpiles for use in HMA shoulders and stabilized subbase (HMA) shall be FRAP, Restricted FRAP, conglomerate, or conglomerate DQ.

(b) RAS. RAS meeting Type 1 or Type 2 requirements will be permitted in all HMA applications as specified herein.

(c) FRAP and/or RAS Usage Limits. Type 1 or Type 2 RAS may be used alone or in conjunction with FRAP in HMA mixtures up to a maximum of 5.0% by weight of the total mix.

When FRAP is used alone or FRAP is used in conjunction with RAS, the percent of virgin asphalt binder replacement (ABR) shall not exceed the amounts indicated in the table below for a given N Design.

Max Asphalt Binder Replacement for FRAP with RAS Combination

HMA Mixtures 1/ 2/	Maximum % ABR		
Ndesign	Binder/Leveling Binder	Surface	Polymer Modified 3/
30L	50	40	10
50	40	35	10
70	40	30	10
90	40	30	10 4/
4.75 mm N-50			30
SMA N-80			20

1/ For HMA "All Other" (shoulder and stabilized subbase) N-30, the percent asphalt binder replacement shall not exceed 50% of the total asphalt binder in the mixture.

2/ When the binder replacement exceeds 15 percent for all mixes, except for SMA and IL-4.75, the high and low virgin asphalt binder grades shall each be reduced by one grade (i.e. 25 percent binder replacement using a virgin asphalt binder grade of PG64-22 will be reduced to a PG58-28). When constructing full depth HMA and the ABR is less than 15 percent, the required virgin asphalt binder grade shall be PG64-28.

3/ When the ABR for SMA or IL-4.75 is 15 percent or less, the required virgin asphalt binder shall be SBS PG76-22 and the elastic recovery shall be a minimum of 80. When the ABR for SMA or IL-4.75 exceeds 15%, the virgin asphalt binder grade shall be SBS PG70-28 and the elastic recovery shall be a minimum of 80.

4/ For polymerized surface mix used for overlays, with up to 10 percent ABR, an SBS PG70-22 will be required. However if used in full depth HMA, an SBS PG70-28 will be required.

1031.07 HMA Mix Designs. At the Contractor's option, HMA mixtures may be constructed utilizing RAP/FRAP and/or RAS material meeting the detailed requirements specified herein.

(a) FRAP and/or RAS. FRAP and /or RAS mix designs shall be submitted for verification. If additional FRAP or RAS stockpiles are tested and found to be within tolerance, as defined under "Evaluation of Tests" herein, and meet all requirements herein, the additional FRAP or RAS stockpiles may be used in the original design at the percent previously verified.

(b) RAS. Type 1 and Type 2 RAS are not interchangeable in a mix design. A RAS stone bulk specific gravity (Gsb) of 2.500 shall be used for mix design purposes.

1031.08 HMA Production. HMA production utilizing FRAP and/or RAS shall be as follows.

To remove or reduce agglomerated material, a scalping screen, gator, crushing unit, or comparable sizing device approved by the Engineer shall be used in the RAS and FRAP feed system to remove or reduce oversized material. If material passing the sizing device adversely affects the mix production or quality of the mix, the sizing device shall be set at a size specified by the Engineer.

If during mix production, corrective actions fail to maintain FRAP, RAS or QC/QA test results within control tolerances or the requirements listed herein the Contractor shall cease production of the mixture containing FRAP or RAS and conduct an investigation that may require a new mix design.

(a) RAS. RAS shall be incorporated into the HMA mixture either by a separate weight depletion system or by using the RAP weigh belt. Either feed system shall be interlocked with the aggregate feed or weigh system to maintain correct proportions for all rates of production and batch sizes. The portion of RAS shall be controlled accurately to within ± 0.5 percent of the amount of RAS utilized. When using the weight depletion system, flow indicators or sensing devices shall be provided and interlocked with the plant controls such that the mixture production is halted when RAS flow is interrupted.

(b) HMA Plant Requirements. HMA plants utilizing FRAP and/or RAS shall be capable of automatically recording and printing the following information.

(1) Dryer Drum Plants.

a. Date, month, year, and time to the nearest minute for each print.

b. HMA mix number assigned by the Department.

c. Accumulated weight of dry aggregate (combined or individual) in tons (metric tons) to the nearest 0.1 ton (0.1 metric ton).

d. Accumulated dry weight of RAS and FRAP in tons (metric tons) to the nearest 0.1 ton (0.1 metric ton).

e. Accumulated mineral filler in revolutions, tons (metric tons), etc. to the nearest 0.1 unit.

f. Accumulated asphalt binder in gallons (liters), tons (metric tons), etc. to the nearest 0.1 unit.

g. Residual asphalt binder in the RAS and FRAP material as a percent of the total mix to the nearest 0.1 percent.

h. Aggregate RAS and FRAP moisture compensators in percent as set on the control panel. (Required when accumulated or individual aggregate and RAS and FRAP are printed in wet condition.)

i. When producing mixtures with FRAP and/or RAS, a positive dust control system shall be utilized.

j. Accumulated mixture tonnage.

k. Dust Removed (accumulated to the nearest 0.1 ton)

(2) Batch Plants.

a. Date, month, year, and time to the nearest minute for each print.

b. HMA mix number assigned by the Department.

c. Individual virgin aggregate hot bin batch weights to the nearest pound (kilogram).

d. Mineral filler weight to the nearest pound (kilogram).

f. RAS and FRAP weight to the nearest pound (kilogram).

g. Virgin asphalt binder weight to the nearest pound (kilogram).

h. Residual asphalt binder in the RAS and FRAP material as a percent of the total mix to the nearest 0.1 percent.

The printouts shall be maintained in a file at the plant for a minimum of one year or as directed by the Engineer and shall be made available upon request. The printing system will be inspected by the Engineer prior to production and verified at the beginning of each construction season thereafter.

1031.09 RAP in Aggregate Surface Course and Aggregate Shoulders. The use of

RAP or FRAP in aggregate surface course and aggregate shoulders shall be as follows.

(a) Stockpiles and Testing. RAP stockpiles may be any of those listed in Article 1031.02, except "Non-Quality" and "FRAP". The testing requirements of Article 1031.03 shall not apply. RAP used to construct aggregate surface course and aggregate shoulders shall be according to the current Bureau of Materials and Physical Research's Policy Memorandum, "Reclaimed Asphalt Pavement (RAP) for Aggregate Applications"

(b) Gradation. One hundred percent of the RAP material shall pass the 1 1/2 in. (37.5mm) sieve. The RAP material shall be reasonably well graded from coarse to fine. RAP material that is gap-graded, FRAP, or single sized will not be accepted for use as Aggregate Surface Course and Aggregate Shoulders."

SPECIAL PROVISION
FOR
MOBILIZATION

This Special Provision amends the provisions of Article 671 of the Standard Specifications for Road and Bridge Construction and shall be construed to be a part thereof, superseding any conflicting provisions thereof applicable to the work under the contract.

671 Mobilization. Revise the Article to read:

671.01 Description. This work shall consist of preparatory work and operations necessary for the movement of personnel, equipment, supplies, and incidentals to the project site; for the establishment of offices, buildings, and other facilities necessary for work on the project; and for all other work or operations which must be performed or costs incurred when beginning work on a work order.

671.02 Method of Measurement. Each one dollar of MOBILIZATION will be measure as one unit.

671.02 Basis of Payment. This work will be paid for under the contract item for MOBILIZATION per work order in accordance with the following table. An allowance for mobilization has been included in the contract to be adjusted as necessary.

Estimated Work Order Value	Mobilization
$0 to $25,000	$5,000.00
$25,000 to $500,000	3% of Estimated Work Order Value
Over $500,000	0% of Estimated Work Order Value

SPECIAL PROVISION
FOR
TRAFFIC PROTECTION

General. This item of work shall include furnishing, installing, maintaining, replacing, relocating and removing all traffic control devices used for the purpose of regulating, warning or directing traffic and protecting workers during the construction or maintenance of this improvement.

Traffic protection shall be provided as called for in the plans, these Special Provisions, applicable Traffic Control Highway Standards, applicable sections of the Standard Specifications, or as directed by the Engineer.

The governing factor in the execution and staging of work for this project is to provide the motoring public with the safest possible travel conditions along the roadway through or around the construction zone. The Contractor shall arrange his operations to keep the closing of any lane of the roadway to a minimum. Where the traffic of any building in the area of the proposed improvement is of an emergency nature, such as Hospital, Fire or Police Station traffic, the Contractor shall provide for free movement of such traffic during the course of construction.

Traffic Control Devices include signs and their supports, signals, pavement markings and markers, traffic cones, barricades with sand bags, plastic drums, channelizing devices, warning lights, arrow boards, flaggers, or any other device used for the purpose of regulating, detouring, warning or guiding traffic through or around the construction zone, including required devices and marking approaching and departing the construction zone.

The Contractor is required to conduct routine inspections of the worksite at a frequency that will allow for the prompt replacement of any traffic control device that has become displaced, worn or damaged to the extent that it no longer conforms to the shape, dimensions, color and operational requirements of the "Manual on Uniform Traffic Control Devices for Streets and Highways (MUTCD), the Traffic Control Standards and the "Quality Standard for Work Zone Traffic Control Devices" issued by the Illinois Department of Transportation or will no longer present a neat appearance to motorists. A sufficient quantity of replacement devices, based on vulnerability to damage, shall be readily available to meet this requirement.

The Contractor shall be responsible for the proper location, installation and arrangement of all traffic control devices. Special attention shall be given to advance warning signs during construction operations in order to keep lane assignment consistent with barricade placement at all times. The Contractor shall immediately remove, cover or turn from the view of the motorists all traffic control devices which are inconsistent with detour or lane assignment patterns and conflicting conditions during the transition from one construction stage to another. When the Contractor elects to cover conflicting or inappropriate signing, materials used shall totally block out reflectivity of the sign and shall cover the entire sign. The method used for covering the signing shall meet with the approval of the Engineer.

The Contractor shall coordinate all traffic control work on this project with adjoining or overlapping projects, including barricade placement necessary to provide a uniform traffic detour pattern. When directed by the Engineer, the Contractor shall remove all traffic control devices which were furnished, installed and maintained by him under this contract, and such devices shall remain the property of the Contractor. All

traffic control devices shall remain in place until specific authorization for relocation or removal is received from the Engineer.

The Contractor shall ensure that all traffic control devices installed by him are functional and effective 24 hours each day.

107.15 Dirt on Pavement or Structures. Add the following after the first paragraph of this Article:

When ordered by the Engineer, the Contractor shall use some method to allay dust and prevent a nuisance. This shall be done preferably by sprinkling the Subgrade or the portion of pavement used by trucks or busses with water. If conditions warrant, this shall receive constant attention by the Contractor. Calcium Chloride shall not be used for this purpose. No extra compensation shall be allowed the Contractor for this work.

Signs. All signs except those referring to daily lane closures shall be post mounted in accordance with Standard 701901 for all projects that exceed four days.

Construction signs referring to daytime lane closures during working hours shall be removed, covered or turned away from the view of the motorists during non-working hours.

Prior to the beginning of construction operations, the Contractor will be provided a sign log of all existing signs within the limits of the construction zone. The Contractor is responsible for verifying the accuracy of the sign log. Throughout the duration of this project, all existing traffic signs shall be maintained by the Contractor. All provisions of Article 107.25 of the Standard Specifications shall apply except the third paragraph shall be revised to read: "The Contractor shall maintain, furnish and replace at his own expense, any traffic sign, or post which has been damaged or lost by the Contractor or a third party".

"Fresh Oil" signs (W21-2) shall be used when prime is applied to pavement that is open to traffic. The signs are to remain until tracking of the prime ceases. The sign shall be erected a minimum of 500 feet preceding the start of the prime and on all side roads within the posted area. The "Fresh Oil" sign on the side road shall be posted a minimum of 200 feet from the mainline pavement.

"Rough Grooved Surface" signs (W8-I107) shall be used when the road has been cold milled and open to traffic. The signs shall remain in place until the milled surface condition no longer exists. These signs shall be erected a minimum of 500 feet preceding the start of the milled pavement and on all side roads within the posted area. The "Rough Grooved Surface" signs on the side roads shall be posted 200 feet from the mainline pavement. All signs shall have an 18" x 18" orange flag and amber flashing light attached.

Whenever a lane is closed to traffic using Standard 701606, 701601, or 701701, the pavement width transition sign (W4-2R or W4-2L) shall be used in lieu of "Workers" sign (W21-1 or W21-1a).

Whenever any vehicle, equipment, workers or their activities infringe on the shoulder or within 15 feet of the traveled way and the traveled way remains unobstructed, then the applicable Traffic Control Standard shall be 701006, 701011, 701101, or 701701. "Shoulder Work Ahead" sign (W21-5(0)-48) shall be used in lieu of the "Workers" sign (W21-1 or W-21-1a).

The Contractor shall provide and erect any other signs that are required for traffic safety operations and the conveyance of traffic information to the motorist, which may not be included in the Traffic Control

Standards. The requirement for these signs shall be determined by and installed at the direction of the Engineer.

Barricades: Any drop off greater than 3 inches, but less than 6 inches within 8 feet of the pavement edge shall be protected by Type I or II barricades equipped with mono-directional steady burn lights at 100 foot center to center spacing. If the drop off within 8 feet of the pavement edge exceeds 6 inches, the barricades mentioned above shall be placed at 50 foot center to center spacing. Barricades that must be placed in excavated areas shall have leg extensions installed such that the top of the barricade is in compliance with the height requirements of Standard 701901. In addition to the placement of barricades as described above, pavement drop off signs (W8-9a) shall be used along with the barricades and at the direction of the Engineer.

Placement of all signs, barricades or drums shall proceed in the direction of flow of traffic. Removal of all signs, barricades or drums shall start at the end of the construction areas and proceed toward oncoming traffic unless otherwise directed by the Engineer.

All Type I and Type II barricades, drums and vertical panels shall be equipped with a steady burn light when used during hours of darkness unless otherwise stated herein.

Check barricades shall be placed in work areas perpendicular to traffic every 1,000 feet, one per lane and per shoulder, to prevent motorists from using work areas as a traveled way. Two additional check barricades shall be placed in advance of each patch excavation or any other hazards in the work area, the first at the edge of the open traffic lane and the second centered in the closed lane. Check barricades shall be Type I or II and equipped with a flashing light.

Arrow Boards. A flashing arrow board shall be operating at all times when a lane is closed to traffic on a multilane highway. Arrow boards shall be provided and located in a head-on position within each lane closure taper.

Temporary Concrete Barrier Vertical Panels and Lights. Whenever temporary concrete barrier is specified in the plans, vertical panels and steady burning lights meeting the requirement of Articles 1106.01 and 1106.02 of the Standard Specifications and Standard 701901 shall be installed on the barrier at 50 foot centers minimum or at the spacing shown on the plans. The method of mounting shall be approved by the Engineer. Upon conclusion of the work, the panels and lights shall be removed and shall remain the property of the Contractor.

Pedestrian Sidewalk Control. The Contractor shall install, maintain and remove necessary signs and barricades needed to direct pedestrians to usable sidewalks and walkways during the construction in accordance with Traffic Control Standard 701801 or as directed by the Engineer. The Contractor shall make adequate provision for the free passage of foot traffic at all intersecting streets which are to remain open to traffic. The materials or equipment used in the construction of this improvement shall be so placed as to afford access to abutting private properly and to all hydrants and valves with a minimum of inconvenience.

All barricades shall be Type I or II equipped with flashing lights. At each point of closure, sufficient numbers of barricades shall be used to completely close the sidewalk to pedestrian movement. Where construction activities involve sidewalks on both sides of the street, the work shall be staged so that both sidewalks are not out of service at the same time.

107.09 Public Convenience and Safety. Revise the Seventh paragraph of this Article to read as follows:

The following vertical and horizontal restrictions shall pertain to roads as defined in the Illinois Highway Code, Article 2, Division 1, Section 2-101, 2-102, and 2-103 when construction is being performed with the road open to traffic.

The Contractor shall provide a telephone number where a responsible individual can be contacted on a 24-hour-a-day basis to receive notification of any deficiencies regarding traffic control and protection. The Contractor shall dispatch workers, materials and equipment to correct any such deficiencies. The Contractor shall respond to any call from the Department concerning any request for improving or correcting traffic control devices and begin making the requested repairs within two hours from the time of notification.

Personal vehicles shall not park within the right-of-way except in specific areas designated by the Engineer.

The contractor shall maintain at least one lane of traffic at all times on two lane roads and at least one lane in each direction on 4 or more lane roads, during the construction of this project. The Contractor shall also maintain areas to entrances and side roads along the proposed improvement. Interference with traffic movements and inconvenience to owners of abutting property and the public shall be kept to a minimum. Any delays or inconveniences caused to the Contractor by complying with these requirements shall be considered as incidental to the contract, and no additional compensation will be allowed.

On two lane roads, the Contractor is to plan the work so that there will be no open holes in the pavement and that all barricades will be removed from the pavement during non-work hours.

On four or more lane highways, there shall be no open holes in the pavement being used by the traveling public. Lane closures, if allowed, will be in accordance with the applicable standards, any staging details shown in the plans and other applicable contract documents.

The Contractor shall remove all equipment from the shoulders and medians after work hours.

No road closures or restrictions shall be permitted except those covered by the Traffic Control Highway Standards without written approval by the Engineer.

When traveling in lanes open to public traffic, the Contractor's vehicles shall always move with and not against or across the flow of traffic. These vehicles shall enter or leave work areas in a manner which will not be hazardous to, nor interfere with, traffic.

Pavement Markings. Temporary pavement marking paint used on temporary or unfinished surfaces shall be maintained to the highest degree of visibility and reflectivity and on long term projects shall be repainted when the temporary pavement marking shows signs of deterioration or at a minimum of every three (3) months and as directed by the Engineer at no additional cost and is considered as incidental to the cost of Traffic Protection.

Temporary pavement marking shall be applied as solid unbroken lines when used to delineate any pavement transition, turn lane transition and storage bay. Double yellow centerline shall be used across a bridge deck where the distance to be marked is less than 160 feet.

Temporary raised reflective bi-directional (amber) pavement markers (Section 781 and Article 1096.02 of the Standard Specifications) shall be used, and replaced when required, throughout a temporary by-pass detour pavement at no additional cost.

Method of Measurement. Delete: Article 701.19 Method of Measurement

Traffic Protection will not be measured for payment but shall include the furnishing, installing, maintaining, relocation and removal of traffic control devices required in the plans and these special provisions and all temporary pavement marking paint and tape lines, letters and symbols.

Basis of Payment. Delete: Article 701.20 Basis of Payment

This work will be paid for at the lump sum price for TRAFFIC PROTECTION, which price shall be payment in full for all labor, materials, transportation, handling and incidentals necessary to furnish, install, maintain, replace, relocate and remove all traffic control devices when required, such as signing, arrow boards, barricades, plastic drums, road closures, temporary pavement marking paint and tape lines and letters and symbols (Section 780 and Article 1095.02 of the Standard Specifications), temporary concrete barrier vertical panels and lights (Standard 701901), flexible delineators (Standard 701901), prismatic barrier reflectors (Sections 782 and 1097 of the Standard Specifications), temporary raised reflective pavement markers (Section 781 and Article 1096.02 of the Standard Specifications) and all traffic control devices indicated in the plans and specifications. The salvage value of all material removed (including existing traffic signs - when removal is required) shall be reflected in the bid price for this item.

Delays to the Contractor caused by complying with these requirements will be considered incidental to the item for Traffic Protection, and no additional compensation will be allowed.

Payment Adjustments. Traffic protection will be measured for payment on a lump sum price for each work order issued under this contract on the following formula:

LUMP SUM PRICE=Initial Estimated Total Cost of all pay items contained in the Work Order (except Traffic Protection) X 3%

The initial estimated total cost of all pay items contained in the Work Order will be based on the Engineer's estimated quantities and contract unit prices.

The lump sum price per work order for traffic protection will not be adjusted even though the work order cost may increase or decrease from the initial estimate based on the actual quantities of work performed. Increasing quantities over the initial estimate may require issuing one or more supplemental work orders. However, supplemental work orders will include no additional cost for traffic protection.

CHECK SHEET #30

State of Illinois
Department of Transportation

SPECIAL PROVISION
FOR
QUALITY CONTROL OF CONCRETE MIXTURES AT THE PLANT

Effective: August 1, 2000
Revised: January 1, 2014

Description. This Special Provision specifies the quality control responsibilities of the Contractor at the plant, for portland cement concrete mixtures, cement aggregate mixture II, and controlled low-strength material incorporated in the project, and defines the quality assurance and acceptance responsibilities of the Engineer.

A list of quality control/quality assurance (QC/QA) documents is provided in Schedule C.

Equipment/Laboratory. The Contractor shall provide a laboratory and test equipment to perform their quality control testing, as required in Schedule A.

The laboratory shall be of sufficient size and be furnished with the necessary equipment, supplies, and current published test methods for adequately and safely performing all required tests. The laboratory will be approved by the Engineer at the beginning of each construction season or each 12 month period. Production of a mixture shall not begin until the Engineer provides written approval of the laboratory. The Contractor shall refer to the Department's "Required Sampling and Testing Equipment for Concrete" for equipment requirements.

Test equipment shall be maintained and calibrated as required by the appropriate test method, and when required by the Engineer. This information shall be documented on the Department's "Calibration of Concrete Testing Equipment" forms BMPR PCCQ01 through BMPR PCCQ09.

The Engineer shall have unrestricted access to the plant and laboratory at any time to inspect measuring and testing equipment, and will notify the Contractor of any deficiencies. Defective equipment shall be immediately repaired or replaced by the Contractor.

Plant/Delivery Trucks. The concrete plant and delivery trucks shall be approved according to the Department's Policy Memorandum "Approval of Concrete Plants and Delivery Trucks".

Quality Control Plan. The Contractor shall submit, in writing, a proposed Quality Control (QC) Plan, Part 2, to the Engineer. The QC Plan shall be submitted a minimum of 45 calendar days prior to the production of a mixture. The QC Plan shall address the quality control of the concrete, cement aggregate mixture II, and controlled low-strength material at the plant. The Contractor shall refer to the Department's "Model Quality Control Plan for Concrete Production" to prepare a QC Plan. The Engineer will respond in writing to the Contractor's proposed QC Plan within 15 calendar days of receipt.

CHECK SHEET #30

Production of a mixture shall not begin until the Engineer provides written approval of the QC Plan. The approved QC Plan shall become a part of the contract between the Department and the Contractor, but shall not be construed as acceptance of any mixture produced.

The QC Plan may be amended during the progress of the work, by either party, subject to mutual agreement. The Engineer will respond in writing to a Contractor's proposed QC Plan amendment within 15 calendar days of receipt. The response will indicate the approval or denial of the Contractor's proposed QC Plan amendment.

Plant Quality Control by Contractor. At the plant, the Contractor shall perform quality control inspection, sampling, testing, and documentation to meet contract requirements. Quality control includes the recognition of obvious defects and their immediate correction. Quality control also includes appropriate action when passing test results are near specification limits. Quality control may require increased testing, communication of test results to the plant or the jobsite, modification of operations, suspension of mixture production, rejection of material, or other actions as appropriate. The Engineer shall be immediately notified of any failing tests and subsequent remedial action. Passing tests shall be reported no later than the start of the next work day.

When a mixture does not comply with specifications, the Contractor shall reject the material; unless the Engineer accepts the material for incorporation in the work, according to Article 105.03 of the Standard Specifications.

(a) Personnel Requirements. The Contractor shall provide personnel to perform the required inspections, sampling, testing, and documentation in a timely manner. A Quality Control (QC) Manager will not be required. The Contractor shall refer to the Department's "Qualifications and Duties of Concrete Quality Control Personnel" document.

A Level II PCC Technician shall be provided at the plant, or shall be available, during mixture production and placement. A Level II PCC Technician may supervise a maximum of three plants. Whenever the Level II PCC Technician is not at the plant during mixture production and placement, a Concrete Tester or Level I PCC Technician shall be present at the plant to perform any necessary concrete tests. The Concrete Tester, Level I PCC Technician, or other individual shall also be trained to perform any necessary aggregate moisture tests, if the Level II PCC Technician is not at the plant during mixture production and placement. The Concrete Tester, Level I PCC Technician, plant personnel, and jobsite personnel shall have the ability to contact the Level II PCC Technician by cellular phone, two-way radio, or other methods approved by the Engineer.

A Concrete Tester may provide assistance with sampling and testing, and shall be supervised by a Level I or Level II PCC Technician.

(b) Required Plant Tests. Sampling and testing shall be performed at the plant, or at a location approved by the Engineer, to control the production of a mixture. The required minimum Contractor plant sampling and testing is indicated in Schedule A.

CHECK SHEET #30

Plant Quality Assurance by Engineer. The Engineer will perform quality assurance tests on independent samples and split samples at the plant. An independent sample is a field sample obtained and tested by only one party. A split sample is one of two equal portions of a field sample, where two parties each receive one portion for testing. The Engineer may request the Contractor to obtain a split sample. Aggregate split samples and any failing strength specimen shall be retained until permission is given by the Engineer for disposal. The results of all quality assurance tests by the Engineer will be made available to the Contractor. However, Contractor split sample test results shall be provided to the Engineer before Department test results are revealed. The Engineer's quality assurance independent sample and split sample testing is indicated in Schedule B.

(a) Comparing Test Results. Differences between the Engineer's and the Contractor's split sample test results will not be considered extreme if within the following limits:

Test Parameter	Acceptable Limits of Precision
Slump	0.75 in. (20 mm)
Air Content	0.9%
Aggregate Gradation	See "Guideline for Sample Comparison" in Appendix "A" of the Manual of Test Procedures for Materials.

When acceptable limits of precision have been met, but only one party is within specification limits, the failing test shall be resolved before the material may be considered for acceptance.

(b) Test Results and Specification Limits. Split sample and independent sample testing shall be as follows.

(1) Split Sample Testing. If either the Engineer's or the Contractor's split sample test result is not within specification limits, and the other party is within specifications limits; immediate retests on a split sample shall be performed for slump, air content, or aggregate gradation. A passing retest result by each party will require no further action. If either the Engineer's or Contractor's slump, air content, or aggregate gradation split sample retest result is a failure; or if either the Engineer's or Contractor's strength test result is a failure, and the other party is within specification limits; the following actions shall be initiated to investigate the test failure:

a. The Engineer and the Contractor shall investigate the sampling method, test procedure, equipment condition, equipment calibration, and other factors.

b. The Engineer or the Contractor shall replace test equipment, as determined by the Engineer.

c. The Engineer and the Contractor shall perform additional testing on split samples, as determined by the Engineer.

CHECK SHEET #30

For aggregate gradation, plant slump, and plant air content: if the failing split sample test result is not resolved according to a., b., or c., and the mixture has not been placed, the Contractor shall reject the material; unless the Engineer accepts the material for incorporation in the work according to Article 105.03 of the Standard Specifications. If the mixture has already been placed, the material will be considered unacceptable.

If a continued trend of difference exists between the Engineer's and the Contractor's split sample test results, or if split sample test results exceed the acceptable limits of precision, the Engineer and the Contractor shall investigate according to a., b., or c.

(2) Independent Sample Testing. For aggregate gradation, plant slump, and plant air content, if the result of a quality assurance test on a sample independently obtained by the Engineer is not within specification limits and the mixture has not been placed, the Contractor shall reject the material, unless the Engineer accepts the material for incorporation in the work according to Article 105.03 of the Standard Specifications. If the mixture has already been placed, the material will be considered unacceptable.

Jobsite Acceptance Testing by the Engineer. The Engineer will perform acceptance testing at the jobsite for slump, air content, and strength.

Acceptance by the Engineer. Final acceptance will be based on the Standard Specifications and the following:

(a) The Contractor's compliance with all contract documents for quality control.

(b) Comparison of the Engineer's jobsite acceptance test results with specification limits, using samples independently obtained by the Engineer.

(c) Validation of Contractor plant quality control test results by comparison with the Engineer's quality assurance test results using split samples. Any quality control or quality assurance test determined to be flawed may be declared invalid only when reviewed and approved by the Engineer. The Engineer will declare a test result invalid only if it is proven that improper sampling or testing occurred. The test result is to be recorded and the reason for declaring the test invalid will be provided by the Engineer.

(d) Comparison of the Engineer's plant quality assurance test results with specification limits using samples independently obtained by the Engineer.

The Engineer may suspend mixture production, reject materials, or take other appropriate action if the Contractor does not control the quality of concrete, cement aggregate mixture II, or controlled low-strength material for acceptance. The decision will be determined according to (a), (b), (c), and (d).

Documentation. The Contractor shall be responsible for documenting all observations, inspections, adjustments to the mix design, test results, retest results, and corrective actions in a bound hardback field book, bound hardback diary, or

appropriate Department form, which shall become the property of the Department. The documentation shall include a method to compare the Engineer's test results with the Contractor's results. The Contractor shall be responsible for the maintenance of all permanent records whether obtained by the Contractor, the consultants, subcontractors, or the producer of the mixture. The Contractor shall provide the Engineer full access to all documentation throughout the progress of the work.

The Department's form BMPR MI504 shall be completed by the Contractor, and shall be submitted to the Engineer weekly or as required by the Engineer. A correctly completed Form BMPR MI504 is required to authorize payment by the Engineer, for applicable pay items.

The Engineer will be responsible for completing form BMPR MI654 and form BMPR MI655.

Basis of Payment. Quality Control of Concrete Mixtures at the Plant will not be paid for separately, but shall be considered as included in the cost of the various types of concrete mixtures required to construct the work items included in the contract.

CHECK SHEET #30

SCHEDULE A

CONTRACTOR PLANT SAMPLING AND TESTING - DOUBLE A			
Item	Test	Frequency	IL Modified AASHTO IL Modified ASTM, or Illinois Test Procedure 1/
Aggregates (Arriving at Plant)	Gradation 2/	As needed to check source for each gradation number	ITP 2, ITP 11, ITP 27, and ITP 248
Aggregates (Stored at Plant in Stockpiles or Bins)	Gradation 2/	2500 cu yd (1900 cu m) for each gradation number 3/	ITP 2, ITP 11, ITP 27, and ITP 248
Aggregates (Stored at Plant in Stockpiles or Bins)	Moisture 4/ : Fine Aggregate	Once per week for moisture sensor, otherwise daily for each gradation number	Flask, Dunagan, Pychnometer Jar, or ITP 255
	Moisture 4/ : Coarse Aggregate	As needed to control production for each gradation number	Dunagan, Pychnometer Jar, or ITP 255
Mixture 5/	Slump Air Content Unit Weight / Yield Slump Flow (SCC) Visual Stability Index (SCC) J-Ring (SCC) 6/ L-Box (SCC) 6/ Temperature	As needed to control production	R60 and T 119 R60 and T 152 or T 196 R60 and T 121 ITP SCC-1 and ITP SCC-2 ITP SCC-1 and ITP SCC-2 ITP SCC-1 and ITP SCC-3 ITP SCC-1 and ITP SCC-4 R60 and ASTM C 1064
Mixture (CLSM) 7/	Flow Air Content Temperature	As needed to control production	ITP 307

1/ Refer to the Department's "Manual of Test Procedures for Materials".

2/ All gradation tests shall be washed. Testing shall be completed no later than 24 hours after the aggregate has been sampled.

3/ One per week (Sunday through Saturday) minimum, unless the stockpile has not received additional aggregate material since the previous test.

One per day minimum for a bridge deck pour, unless the stockpile has not received additional aggregate material since the previous test. The sample shall be taken and testing completed prior to the pour. The bridge deck aggregate sample may be taken the day before the pour or as approved by the Engineer.

4/ If the moisture test and moisture sensor disagree by more than 0.5 percent, retest. If the difference remains, adjust the moisture sensor to an average of two or more moisture tests. The Department's "Water/Cement Ratio Worksheet" form (BMPR PCCW01) shall be completed, when applicable.

CHECK SHEET #30

5/ The Contractor may also perform strength testing according to Illinois Modified AASHTO R 60, T 23, and T 22 or T 177; or water content testing according to Illinois Modified AASHTO T 318.

The Contractor may also perform other available self-consolidating concrete (SCC) tests at the plant to control mixture production.

6/ The Contractor shall select the J-Ring or L-Box test for plant sampling and testing.

7/ The Contractor may also perform strength testing according to ITP 307.

SCHEDULE B

ENGINEER QUALITY ASSURANCE INDEPENDENT SAMPLE TESTING		
Location	Measured Property	Testing Frequency 1/
Plant	Gradation of aggregates stored in stockpiles or bins, Slump, and Air Content	As determined by the Engineer.

ENGINEER QUALITY ASSURANCE SPLIT SAMPLE TESTING 2/		
Location	Measured Property	Testing Frequency 1/
Plant	Gradation of aggregates stored in stockpiles or bins	At the beginning of the project, the first test performed by the Contractor. Thereafter, a minimum of 10% of total tests required of the Contractor will be performed per aggregate gradation number and per plant.
	Slump, Air Content, Slump Flow (SCC), Visual Stability Index (SCC), J-Ring (SCC), and L-Box (SCC)	As determined by the Engineer.

1/ The Engineer will perform the testing throughout the period of quality control testing by the Contractor.

2/ The Engineer will witness and take immediate possession of or otherwise secure the Department's split sample obtained by the Contractor.

CHECK SHEET #30

SCHEDULE C

IDOT CONCRETE QUALITY CONTROL AND QUALITY ASSURANCE DOCUMENTS

(a) Model Quality Control Plan for Concrete Production (*)

(b) Qualifications and Duties of Concrete Quality Control Personnel (*)

(c) Development of Gradation Bands on Incoming Aggregate at Mix Plants (*)

(d) Required Sampling and Testing Equipment for Concrete (*)

(e) Calibration of Concrete Testing Equipment (BMPR PCCQ01 through BMPR PCCQ09)(*)

(f) Water/Cement Ratio Worksheet (BMPR PCCW01) (*)

(g) Field/Lab Gradations (BMPR MI504) (*)

(h) Aggregate Technician Course or Mixture Aggregate Technician Course (*)

(i) Portland Cement Concrete Tester Course (*)

(j) Portland Cement Concrete Level I Technician Course – Manual of Instructions for Concrete Testing (*)

(k) Portland Cement Concrete Level II Technician Course – Manual of Instructions for Concrete Proportioning (*)

(l) Portland Cement Concrete Level III Technician Course – Manual of Instructions for Design of Concrete Mixtures (*)

(m) Manual of Test Procedures for Materials

* Refer to the Department's "Manual of Test Procedures for Materials" for more information.

CHECK SHEET #31

State of Illinois
Department of Transportation

SPECIAL PROVISION
FOR
QUALITY CONTROL/QUALITY ASSURANCE OF CONCRETE MIXTURES

Effective: April 1, 1992
Revised: January 1, 2015

Add the following to Section 1020 of the Standard Specifications:

"**1020.16 Quality Control/Quality Assurance of Concrete Mixtures**. This Article specifies the quality control responsibilities of the Contractor for concrete mixtures (except Class PC and PS concrete), cement aggregate mixture II, and controlled low-strength material incorporated in the project, and defines the quality assurance and acceptance responsibilities of the Engineer.

A list of quality control/quality assurance (QC/QA) documents is provided in Article 1020.16(g), Schedule D.

A Level I Portland Cement Concrete (PCC) Technician shall be defined as an individual who has successfully completed the Department's training for concrete testing.

A Level II Portland Cement Concrete (PCC) Technician shall be defined as an individual who has successfully completed the Department's training for concrete proportioning.

A Level III Portland Cement Concrete (PCC) Technician shall be defined as an individual who has successfully completed the Department's training for concrete mix design.

A Concrete Tester shall be defined as an individual who has successfully completed the Department's training to assist with concrete testing and is monitored on a daily basis.

Aggregate Technician shall be defined as an individual who has successfully completed the Department's training for gradation testing involving aggregate production and mixtures.

Mixture Aggregate Technician shall be defined as an individual who has successfully completed the Department's training for gradation testing involving mixtures.

Gradation Technician shall be defined as an individual who has successfully completed the Department's training to assist with gradation testing and is monitored on a daily basis.

(a) Equipment/Laboratory. The Contractor shall provide a laboratory and test equipment to perform their quality control testing.

CHECK SHEET #31

The laboratory shall be of sufficient size and be furnished with the necessary equipment, supplies, and current published test methods for adequately and safely performing all required tests. The laboratory will be approved by the Engineer according to the current Bureau of Materials and Physical Research Policy Memorandum "Minimum Private Laboratory Requirements for Construction Materials Testing or Mix Design". Production of a mixture shall not begin until the Engineer provides written approval of the laboratory. The Contractor shall refer to the Department's "Required Sampling and Testing Equipment for Concrete" for equipment requirements.

Test equipment shall be maintained and calibrated as required by the appropriate test method, and when required by the Engineer. This information shall be documented on the Department's "Calibration of Concrete Testing Equipment" forms BMPR PCCQ01 through BMPR PCCQ09.

Test equipment used to determine compressive or flexural strength shall be calibrated each 12 month period by an independent agency, using calibration equipment traceable to the National Institute of Standards and Technology (NIST). The Contractor shall have the calibration documentation available at the test equipment location.

The Engineer will have unrestricted access to the plant and laboratory at any time to inspect measuring and testing equipment, and will notify the Contractor of any deficiencies. Defective equipment shall be immediately repaired or replaced by the Contractor.

(b) Quality Control Plan. The Contractor shall submit, in writing, a proposed Quality Control (QC) Plan to the Engineer. The QC Plan shall be submitted a minimum of 45 calendar days prior to the production of a mixture. The QC Plan shall address the quality control of the concrete, cement aggregate mixture II, and controlled low-strength material incorporated in the project. The Contractor shall refer to the Department's "Model Quality Control Plan for Concrete Production" to prepare a QC Plan. The Engineer will respond in writing to the Contractor's proposed QC Plan within 15 calendar days of receipt.

Production of a mixture shall not begin until the Engineer provides written approval of the QC Plan. The approved QC Plan shall become a part of the contract between the Department and the Contractor, but shall not be construed as acceptance of any mixture produced.

The QC Plan may be amended during the progress of the work, by either party, subject to mutual agreement. The Engineer will respond in writing to a Contractor's proposed QC Plan amendment within 15 calendar days of receipt. The response will indicate the approval or denial of the Contractor's proposed QC Plan amendment.

(c) Quality Control by Contractor. The Contractor shall perform quality control inspection, sampling, testing, and documentation to meet contract requirements. Quality control includes the recognition of obvious defects

and their immediate correction. Quality control also includes appropriate action when passing test results are near specification limits, or to resolve test result differences with the Engineer. Quality control may require increased testing, communication of test results to the plant or the jobsite, modification of operations, suspension of mixture production, rejection of material, or other actions as appropriate. The Engineer shall be immediately notified of any failing tests and subsequent remedial action. Passing tests shall be reported no later than the start of the next work day.

When a mixture does not comply with specifications, the Contractor shall reject the material, unless the Engineer accepts the material for incorporation in the work, according to Article 105.03.

(1) Personnel Requirements. The Contractor shall provide a Quality Control (QC) Manager who will have overall responsibility and authority for quality control. The jobsite and plant personnel shall be able to contact the QC Manager by cellular phone, two-way radio, or other methods approved by the Engineer.

The QC Manager shall visit the jobsite a minimum of once a week. A visit shall be performed the day of a bridge deck pour, the day a non-routine mixture is placed as determined by the Engineer, or the day a plant is anticipated to produce more than 1000 cu yd (765 cu m). Any of the three required visits may be used to meet the once per week minimum requirement.

The Contractor shall provide personnel to perform the required inspections, sampling, testing, and documentation in a timely manner. The Contractor shall refer to the Department's "Qualifications and Duties of Concrete Quality Control Personnel" document.

A Level I PCC Technician shall be provided at the jobsite during mixture production and placement, and may supervise concurrent pours on the project. For concurrent pours, a minimum of one Concrete Tester shall be required at each pour location. If the Level I PCC Technician is at one of the pour locations, a Concrete Tester is still required at the same location. Each Concrete Tester shall be able to contact the Level I PCC Technician by cellular phone, two-way radio, or other methods approved by the Engineer. A single Level I PCC Technician shall not supervise concurrent pours for multiple contracts.

A Level II PCC Technician shall be provided at the plant, or shall be available, during mixture production and placement. A Level II PCC Technician may supervise a maximum of three plants. Whenever the Level II PCC Technician is not at the plant during mixture production and placement, a Concrete Tester or Level I PCC Technician shall be present at the plant to perform any necessary concrete tests. The Concrete Tester, Level I PCC Technician, or other individual shall also be trained to perform any necessary aggregate moisture tests, if the Level II PCC Technician is not at the plant during mixture production and placement. The Concrete Tester, Level I PCC Technician, plant personnel, and jobsite personnel shall have the ability to contact the

Level II PCC Technician by cellular phone, two-way radio, or other methods approved by the Engineer.

For a mixture which is produced and placed with a mobile portland cement concrete plant as defined in Article 1103.04, a Level II PCC Technician shall be provided. The Level II PCC Technician shall be present at all times during mixture production and placement. However, the Level II PCC Technician may request to be available if operations are satisfactory. Approval shall be obtained from the Engineer, and jobsite personnel shall have the ability to contact the Level II PCC Technician by cellular phone, two-way radio, or other methods approved by the Engineer.

A Concrete Tester, Mixture Aggregate Technician, and Aggregate Technician may provide assistance with sampling and testing. A Gradation Technician may provide assistance with testing. A Concrete Tester shall be supervised by a Level I or Level II PCC Technician. A Gradation Technician shall be supervised by a Level II PCC Technician, Mixture Aggregate Technician, or Aggregate Technician.

(2) Required Plant Tests. Sampling and testing shall be performed at the plant, or at a location approved by the Engineer, to control the production of a mixture. The required minimum Contractor plant sampling and testing is indicated in Article 1020.16(g) Schedule A.

(3) Required Field Tests. Sampling and testing shall be performed at the jobsite to control the production of a mixture, and to comply with specifications for placement. For standard curing, after initial curing, and for strength testing, the location shall be approved by the Engineer. The required minimum Contractor jobsite sampling and testing is indicated in Article 1020.16(g), Schedule B.

(d) Quality Assurance by Engineer. The Engineer will perform quality assurance tests on independent samples and split samples. An independent sample is a field sample obtained and tested by only one party. A split sample is one of two equal portions of a field sample, where two parties each receive one portion for testing. The Engineer may request the Contractor to obtain a split sample. Aggregate split samples and any failing strength specimen shall be retained until permission is given by the Engineer for disposal. The results of all quality assurance tests by the Engineer will be made available to the Contractor. However, Contractor split sample test results shall be provided to the Engineer before Department test results are revealed. The Engineer's quality assurance independent sample and split sample testing are indicated in Article 1020.16(g), Schedule C.

(1) Strength Testing. For strength testing, Article 1020.09 shall apply, except the Contractor and Engineer strength specimens may be placed in the same field curing box for initial curing and may be cured in the same water storage tank for final curing.

CHECK SHEET #31

(2) Comparing Test Results. Differences between the Engineer's and the Contractor's split sample test results will be considered reasonable if within the following limits:

Test Parameter	Acceptable Limits of Precision
Slump	0.75 in. (20 mm)
Air Content	0.9%
Compressive Strength	900 psi (6200 kPa)
Flexural Strength	90 psi (620 kPa)
Slump Flow (Self-Consolidating Concrete (SCC))	1.5 in. (40 mm)
Visual Stability Index (SCC)	Not Applicable
J-Ring (SCC)	1.5 in. (40 mm)
L-Box (SCC)	10 %
Hardened Visual Stability Index (SCC)	Not Applicable
Dynamic Segregation Index (SCC)	1.0 %
Flow (Controlled Low-Strength Material (CLSM))	1.5 in. (40 mm)
Strength (CLSM)	40 psi (275 kPa)
Aggregate Gradation	See "Guideline for Sample Comparison" in Appendix "A" of the Manual of Test Procedures for Materials.

When acceptable limits of precision have been met, but only one party is within specification limits, the failing test shall be resolved before the material may be considered for acceptance.

(3) Test Results and Specification Limits.

a. Split Sample Testing. If either the Engineer's or the Contractor's split sample test result is not within specification limits and the other party is within specification limits, immediate retests on a split sample shall be performed for slump, air content, slump flow, visual stability index, J-Ring, L-Box, dynamic segregation index, flow (CLSM), or aggregate gradation. A passing retest result by each party will require no further action. If either the Engineer's or Contractor's slump, air content, slump flow, visual stability index, J-Ring, L-Box, dynamic segregation index, flow (CLSM), or aggregate gradation split sample retest result is a failure; or if either the Engineer's or Contractor's strength or hardened visual stability index test result is a failure and the other party is within specification limits; the following actions shall be initiated to investigate the test failure:

1. The Engineer and the Contractor shall investigate the sampling method, test procedure, equipment condition, equipment calibration, and other factors.

CHECK SHEET #31

2. The Engineer or the Contractor shall replace test equipment, as determined by the Engineer.

3. The Engineer and the Contractor shall perform additional testing on split samples, as determined by the Engineer.

For aggregate gradation, jobsite slump, jobsite air content, jobsite slump flow, jobsite visual stability index, jobsite J-Ring, jobsite L-Box, jobsite dynamic segregation index, and jobsite flow (CLSM), if the failing split sample test result is not resolved according to 1., 2., or 3., and the mixture has not been placed, the Contractor shall reject the material; unless the Engineer accepts the material for incorporation in the work, according to Article 105.03. If the mixture has already been placed, or if a failing strength or hardened visual stability index test result is not resolved according to 1., 2., or 3., the material will be considered unacceptable.

If a continued trend of difference exists between the Engineer's and the Contractor's split sample test results, or if split sample test results exceed the acceptable limits of precision, the Engineer and the Contractor shall investigate according to items 1., 2., and 3.

b. Independent Sample Testing. For aggregate gradation, jobsite slump, jobsite air content, jobsite slump flow, jobsite visual stability index, jobsite J-Ring, jobsite L-Box, jobsite dynamic segregation index, jobsite flow (CLSM), if the result of a quality assurance test on a sample independently obtained by the Engineer is not within specification limits, and the mixture has not been placed, the Contractor shall reject the material; unless the Engineer accepts the material for incorporation in the work, according to Article 105.03. If the mixture has already been placed or the Engineer obtains a failing strength or hardened visual stability index test result, the material will be considered unacceptable.

(e) Acceptance by the Engineer. Final acceptance will be based on the Standard Specifications and the following:

(1) The Contractor's compliance with all contract documents for quality control.

(2) Validation of Contractor quality control test results by comparison with the Engineer's quality assurance test results using split samples. Any quality control or quality assurance test determined to be flawed may be declared invalid only when reviewed and approved by the Engineer. The Engineer will declare a test result invalid only if it is proven that improper sampling or testing occurred. The test result is to be recorded and the reason for declaring the test invalid will be provided by the Engineer.

CHECK SHEET #31

(3) Comparison of the Engineer's quality assurance test results with specification limits using samples independently obtained by the Engineer.

The Engineer may suspend mixture production, reject materials, or take other appropriate action if the Contractor does not control the quality of concrete, cement aggregate mixture II, or controlled low-strength material for acceptance. The decision will be determined according to (1), (2), or (3).

(f) Documentation.

(1) Records. The Contractor shall be responsible for documenting all observations, inspections, adjustments to the mix design, test results, retest results, and corrective actions in a bound hardback field book, bound hardback diary, or appropriate Department form, which shall become the property of the Department. The documentation shall include a method to compare the Engineer's test results with the Contractor's results. The Contractor shall be responsible for the maintenance of all permanent records whether obtained by the Contractor, the consultants, the subcontractors, or the producer of the mixture. The Contractor shall provide the Engineer full access to all documentation throughout the progress of the work.

The Department's form BMPR MI504, form BMPR MI654, and form BMPR MI655 shall be completed by the Contractor, and shall be submitted to the Engineer weekly or as required by the Engineer. A correctly completed form BMPR MI504, form BMPR MI654, and form BMPR MI655 are required to authorize payment by the Engineer for applicable pay items.

(2) Delivery Truck Ticket. The following information shall be recorded on each delivery ticket or in a bound hardback field book: initial revolution counter reading (final reading optional) at the jobsite, if the mixture is truck-mixed; time discharged at the jobsite; total amount of each admixture added at the jobsite; and total amount of water added at the jobsite.

(g) Basis of Payment and Schedules. Quality Control/Quality Assurance of portland cement concrete mixtures will not be paid for separately, but shall be considered as included in the cost of the various concrete contract items.

CHECK SHEET #31

SCHEDULE A

CONTRACTOR PLANT SAMPLING AND TESTING			
Item	Test	Frequency	IL Modified AASHTO, IL Modified ASTM, or Illinois Test Procedure 1/
Aggregates (Arriving at Plant)	Gradation 2/	As needed to check source for each gradation number	ITP 2, ITP 11, ITP 27, and ITP 248
Aggregates (Stored at Plant in Stockpiles or Bins)	Gradation 2/	2500 cu yd (1900 cu m) for each gradation number 3/	ITP 2, ITP 11, ITP 27, and ITP 248
Aggregates (Stored at Plant in Stockpiles or Bins)	Moisture 4/: Fine Aggregate	Once per week for moisture sensor, otherwise daily for each gradation number	Flask, Dunagan, Pychnometer Jar, or ITP 255
	Moisture 4/: Coarse Aggregate	As needed to control production for each gradation number	Dunagan, Pychnometer Jar, or ITP 255
Mixture 5/	Slump Air Content Unit Weight / Yield Slump Flow (SCC) Visual Stability Index (SCC) J-Ring (SCC) 6/ L-Box (SCC) 6/ Temperature	As needed to control production	R 60 and T 119 R 60 and T 152 or T 196 R 60 and T 121 ITP SCC-1 and ITP SCC-2 ITP SCC-1 and ITP SCC-2 ITP SCC-1 and ITP SCC-3 ITP SCC-1 and ITP SCC-4 R 60 and ASTM C 1064
Mixture (CLSM) 7/	Flow Air Content Temperature	As needed to control production	ITP 307

1/ Refer to the Department's "Manual of Test Procedures for Materials".

2/ All gradation tests shall be washed. Testing shall be completed no later than 24 hours after the aggregate has been sampled.

3/ One per week (Sunday through Saturday) minimum, unless the stockpile has not received additional aggregate material since the previous test.

One per day minimum for a bridge deck pour, unless the stockpile has not received additional aggregate material since the previous test. The sample shall be taken and testing completed prior to the pour. The bridge deck aggregate sample may be taken the day before the pour or as approved by the Engineer.

4/ If the moisture test and moisture sensor disagree by more than 0.5 percent, retest. If the difference remains, adjust the moisture sensor to an average of two or more moisture tests. The Department's "Water/Cement Ratio Worksheet" form (BMPR PCCW01) shall be completed, when applicable.

CHECK SHEET #31

5/ The Contractor may also perform strength testing according to Illinois Modified AASHTO R 60, T 23, and T 22 or T 177; or water content testing according to Illinois Modified AASHTO T 318.

The Contractor may also perform other available self-consolidating concrete (SCC) tests at the plant to control mixture production.

6/ The Contractor shall select the J-Ring or L-Box test for plant sampling and testing.

7/ The Contractor may also perform strength testing according to ITP 307.

CHECK SHEET #31

SCHEDULE B

CONTRACTOR JOBSITE SAMPLING & TESTING [1/]			
Item	Measured Property	Random Sample Testing Frequency per Mix Design and per Plant [2/]	IL Modified AASHTO, IL Modified ASTM, or Illinois Test Procedure
Pavement, Shoulder, Base Course, Base Course Widening, Driveway Pavement, Railroad Crossing, Cement Aggregate Mixture II	Slump [3/ 4/]	1 per 500 cu yd (400 cu m) or minimum 1/day	R 60 and T 119
	Air Content [3/ 5/ 6/]	1 per 100 cu yd (80 cu m) or minimum 1/day	R 60 and T 152 or T 196
	Compressive Strength [7/ 8/] or Flexural Strength [7/ 8/]	1 per 1250 cu yd (1000 cu m) or minimum 1/day	R 60, T 22 and T 23 or R 60, T 177 and T 23
Bridge Approach Slab [9/], Bridge Deck [9/], Bridge Deck Overlay [9/], Superstructure [9/], Substructure, Culvert, Miscellaneous Drainage Structures, Retaining Wall, Building Wall, Drilled Shaft Pile & Encasement Footing, Foundation, Pavement Patching, Structural Repairs	Slump [3/ 4/]	1 per 50 cu yd (40 cu m) or minimum 1/day	R 60 and T 119
	Air Content [3/ 5/ 6/]	1 per 50 cu yd (40 cu m) or minimum 1/day	R 60 and T 152 or T 196
	Compressive Strength [7/ 8/] or Flexural Strength [7/ 8/]	1 per 250 cu yd (200 cu m) or minimum 1/day	R 60, T 22 and T 23 or R 60, T 177 and T 23
Seal Coat	Slump [3/]	1 per 250 cu yd (200 cu m) or minimum 1/day	R 60 and T 119
	Air Content [3/ 5/ 6/]	1 per 250 cu yd (200 cu m) or minimum 1/day when air is entrained	R 60 and T 152 or T 196
	Compressive Strength [7/ 8/] or Flexural Strength [7/ 8/]	1 per 250 cu yd (200 cu m) or minimum 1/day	R 60, T 22 and T 23 or R 60, T 177 and T 23

CHECK SHEET #31

CONTRACTOR JOBSITE SAMPLING & TESTING [1/]			
Curb, Gutter, Median, Barrier, Sidewalk, Slope Wall, Paved Ditch, Fabric Formed Concrete Revetment Mat [10/], Miscellaneous Items, Incidental Items	Slump [3/ 4/]	1 per 100 cu yd (80 cu m) or minimum 1/day	R 60 and T 119
	Air Content [3/ 5/ 6/]	1 per 50 cu yd (40 cu m) or minimum 1/day	R 60 and T 152 or T 196
	Compressive Strength [7/ 8/] or Flexural Strength [7/ 8/]	1 per 400 cu yd (300 cu m) or minimum 1/day	R 60, T 22 and T 23 or R 60, T 177 and T 23
Items Using Self-Consolidating Concrete	Slump Flow [3/] VSI [3/] J-Ring [3/ 11/] L-Box [3/ 11/]	Perform at same frequency that is specified for the Item's slump	ITP SCC-1 & ITP SCC-2 ITP SCC-1 & ITP SCC-2 ITP SCC-1 & ITP SCC-3 ITP SCC-1 & ITP SCC-4
	HVSI [12/]	Minimum 1/day at start of production for that day	ITP SCC-1 and ITP SCC-6
	Dynamic Segregation Index (DSI)	Minimum 1/week at start of production for that week	ITP SCC-1 and ITP SCC-8 (Option C)
	Air Content [3/ 5/ 6/]	Perform at same frequency that is specified for the Item's air content	ITP SCC-1 and T 152 or T 196
	Compressive Strength [7/ 8/] or Flexural Strength [7/ 8/]	Perform at same frequency that is specified for the Item's strength	ITP SCC-1, T 22 and T 23 or ITP SCC-1, T 177 and T 23
All	Temperature [3/]	As needed to control production	R 60 and ASTM C 1064
Controlled Low-Strength Material (CLSM)	Flow, Air Content, Compressive Strength (28-day) [13/], and Temperature	First truck load delivered and as needed to control production thereafter	ITP 307

1/ Sampling and testing of small quantities of curb, gutter, median, barrier, sidewalk, slope wall, paved ditch, miscellaneous items, and incidental items may be waived by the Engineer, if requested by the Contractor. However, quality control personnel are still required according to Article 1020.16(c)(1). The Contractor shall also provide recent evidence that similar material has been found to be satisfactory under normal sampling and testing

CHECK SHEET #31

procedures. The total quantity that may be waived for testing shall not exceed 100 cu yd (76 cu m) per contract.

If the Contractor's or Engineer's test result for any jobsite mixture test is not within the specification limits, all subsequent truck loads delivered shall be tested by the Contractor until the problem is corrected.

2/ If one mix design is being used for several construction items during a day's production, one testing frequency may be selected to include all items. The construction items shall have the same slump, air content, and water/cement ratio specifications. For self-consolidating concrete, the construction items shall have the same slump flow, visual stability index, J-Ring, L-Box, air content, and water/cement ratio specifications. The frequency selected shall equal or exceed the testing required for the construction item.

One sufficiently sized sample shall be taken to perform the required test(s). Random numbers shall be determined according to the Department's "Method for Obtaining Random Samples for Concrete". The Engineer will provide random sample locations.

3/ The temperature, slump, and air content tests shall be performed on the first truck load delivered, for each pour. For self-consolidating concrete, the temperature, slump flow, visual stability index, J-Ring or L-Box, and air content tests shall be performed on the first truck load delivered, for each pour. Unless a random sample is required for the first truck load, testing the first truck load does not satisfy random sampling requirements.

4/ The slump random sample testing frequency shall be a minimum 1/day for a construction item which is slipformed.

5/ If a pump or conveyor is used for placement, a correction factor shall be established to allow for a loss of air content during transport. The first three truck loads delivered shall be tested, before and after transport by the pump or conveyor, to establish the correction factor. Once the correction is determined, it shall be re-checked after an additional 50 cu yd (38 cu m) is pumped, or an additional 100 cu yd (76 cu m) is transported by conveyor. This shall continue throughout the pour. If the re-check indicates the correction factor has changed, a minimum of two truckloads is required to re-establish the correction factor. The correction factor shall also be re-established when significant changes in temperature, distance, pump or conveyor arrangement, and other factors have occurred. If the correction factor is greater than 3.0 percent, the Contractor shall take corrective action to reduce the loss of air content during transport by the pump or conveyor. The Contractor shall record all air content test results, correction factors, and corrected air contents. The corrected air content shall be reported on form BMPR MI654.

6/ If the Contractor's or Engineer's air content test result is within the specification limits, and 0.2 percent or closer to either limit, the next truck load delivered shall be tested by the Contractor. For example, if the specified air content range is 5.0 to 8.0 percent and the test result is 5.0, 5.1, 5.2, 7.8, 7.9, or 8.0 percent, the next truck shall be tested by the Contractor.

CHECK SHEET #31

7/ The test of record for strength shall be the day indicated in Article 1020.04. For cement aggregate mixture II, a strength requirement is not specified and testing is not required. Additional strength testing to determine early falsework and form removal, early pavement or bridge opening to traffic, or to monitor strengths is at the discretion of the Contractor. Strength shall be defined as the average of two 6 x 12 in. (150 x 300 mm) cylinder breaks, three 4 x 8 in. (100 x 200 mm) cylinder breaks, or two beam breaks for field tests. Per Illinois Modified AASHTO T 23, cylinders shall be 6 x 12 in. (150 x 300 mm) when the nominal maximum size of the coarse aggregate exceeds 1 in. (25 mm). Nominal maximum size is defined as the largest sieve which retains any of the aggregate sample particles.

8/ In addition to the strength test, a slump test, air content test, and temperature test shall be performed on the same sample. For self-consolidating concrete, a slump flow test, visual stability index test, J-Ring or L-Box test, air content test, and temperature test shall be performed on the same sample as the strength test. For mixtures pumped or conveyored, the Contractor shall sample according to Illinois Modified AASHTO R 60.

9/ The air content test will be required for each delivered truck load.

10/ For fabric formed concrete revetment mat, the slump test is not required and the flexural strength test is not applicable.

11/ The Contractor shall select the J-Ring or L-Box test for jobsite sampling and testing.

12/ In addition to the hardened visual stability index (HVSI) test, a slump flow test, visual stability index (VSI) test, J-Ring or L-Box test, air content test, and temperature test shall be performed on the same sample. The Contractor shall retain all hardened visual stability index cut cylinder specimens until the Engineer notifies the Contractor that the specimens may be discarded.

13/ The test of record for strength shall be the day indicated in Article 1019.04. In addition to the strength test, a flow test, air content test, and temperature test shall be performed on the same sample. The strength test may be waived by the Engineer if future removal of the material is not a concern.

CHECK SHEET #31

SCHEDULE C

ENGINEER QUALITY ASSURANCE INDEPENDENT SAMPLE TESTING		
Location	Measured Property	Testing Frequency [1/]
Plant	Gradation of aggregates stored in stockpiles or bins, Slump and Air Content	As determined by the Engineer.
Jobsite	Slump, Air Content, Slump Flow, Visual Stability Index, J-Ring, L-Box, Hardened Visual Stability Index, Dynamic Segregation Index, and Strength	As determined by the Engineer.
	Flow, Air Content, Strength (28-day), and Dynamic Cone Penetration for Controlled Low-Strength Material (CLSM)	As determined by the Engineer

ENGINEER QUALITY ASSURANCE SPLIT SAMPLE TESTING [2/]		
Location	Measured Property	Testing Frequency [1/]
Plant	Gradation of aggregates stored in stockpiles or bins	At the beginning of the project, the first test performed by the Contractor. Thereafter, a minimum of 10% of total tests required of the Contractor will be performed per aggregate gradation number and per plant.
	Slump, Air Content, Slump Flow (SCC), Visual Stability Index (SCC), J-Ring (SCC), and L-Box (SCC)	As determined by the Engineer.
Jobsite	Slump, Air Content [3/], Slump Flow, Visual Stability Index, J-Ring and L-Box	At the beginning of the project, the first three tests performed by the Contractor. Thereafter, a minimum of 20% of total tests required of the Contractor will be performed per plant, which will include a minimum of one test per mix design.
	Hardened Visual Stability Index	As determined by the Engineer.
	Dynamic Segregation Index	As determined by the Engineer.
	Strength	At the beginning of the project, the first test performed by the Contractor. Thereafter, a minimum of 20% of total tests required of the Contractor will be performed per plant, which will include a minimum of one test per mix design.
	Flow, Air Content, and Strength (28-day) for Controlled Low-Strength Material (CLSM)	As determined by the Engineer.

CHECK SHEET #31

1/ The Engineer will perform the testing throughout the period of quality control testing by the Contractor.

2/ The Engineer will witness and take immediate possession of or otherwise secure the Department's split sample obtained by the Contractor.

3/ Before transport by pump or conveyor, a minimum of 20 percent of total tests required of the Contractor will be performed per mix design and per plant. After transport by pump or conveyor, a minimum of 20 percent of total tests required of the Contractor will be performed per mix design and per plant.

CHECK SHEET #31

SCHEDULE D

CONCRETE QUALITY CONTROL AND QUALITY ASSURANCE DOCUMENTS

(a) Model Quality Control Plan for Concrete Production (*)

(b) Qualifications and Duties of Concrete Quality Control Personnel (*)

(c) Development of Gradation Bands on Incoming Aggregate at Mix Plants (*)

(d) Required Sampling and Testing Equipment for Concrete (*)

(e) Method for Obtaining Random Samples for Concrete (*)

(f) Calibration of Concrete Testing Equipment (BMPR PCCQ01 through BMPR PCCQ09) (*)

(g) Water/Cement Ratio Worksheet (BMPR PCCW01) (*)

(h) Field/Lab Gradations (BMPR MI504) (*)

(i) Concrete Air, Slump and Quantity (BMPR MI654) (*)

(j) P.C. Concrete Strengths (BMPR MI655) (*)

(k) Aggregate Technician Course or Mixture Aggregate Technician Course (*)

(l) Portland Cement Concrete Tester Course (*)

(m) Portland Cement Concrete Level I Technician Course - Manual of Instructions for Concrete Testing (*)

(n) Portland Cement Concrete Level II Technician Course - Manual of Instructions for Concrete Proportioning (*)

(o) Portland Cement Concrete Level III Technician Course - Manual of Instructions for Design of Concrete Mixtures (*)

(p) Manual of Test Procedures for Materials

* Refer to Appendix C of the Department's "Manual of Test Procedures for Materials" for more information.

HOT MIX ASPHALT – PRIME COAT (BDE)

Effective: November 1, 2014

Revise Note 1 of Article 406.02 of the Standard Specifications to read:

"Note 1. The bituminous material used for prime coat shall be one of the types listed in the following table.

When emulsified asphalts are used, any dilution with water shall be performed by the emulsion producer. The emulsified asphalt shall be thoroughly agitated within 24 hours of application and show no separation of water and emulsion.

Application	Bituminous Material Types
Prime Coat on Brick, Concrete, or HMA Bases	SS-1, SS-1h, SS-1hP, SS-1vh, RS-1, RS-2, CSS-1, CSS-1h, CSS-1hp, CRS-1, CRS-2, HFE-90, RC-70
Prime Coat on Aggregate Bases	MC-30, PEP"

Add the following to Article 406.03 of the Standard Specifications.

"(i) Vacuum Sweeper 1101.19
(j) Spray Paver ..... 1102.06"

Revise Article 406.05(b) of the Standard Specifications to read:

"(b) Prime Coat. The bituminous material shall be prepared according to Article 403.05 and applied according to Article 403.10. The use of RC-70 shall be limited to air temperatures less than 60 °F (15 °C).

(1) Brick, Concrete or HMA Bases. The base shall be cleaned of all dust, debris and any substance that will prevent the prime coat from adhering to the base. Cleaning shall be accomplished by sweeping to remove all large particles and air blasting to remove dust. As an alternative to air blasting, a vacuum sweeper may be used to accomplish the dust removal. The base shall be free of standing water at the time of application. The prime coat shall be applied uniformly and at a rate that will provide a residual asphalt rate on the prepared surface as specified in the following table.

Type of Surface to be Primed	Residual Asphalt Rate lb/sq ft (kg/sq m)
Milled HMA, Aged Non-Milled HMA, Milled Concrete, Non-Milled Concrete & Tined Concrete	0.05 (0.244)
Fog Coat between HMA Lifts, IL-4.75 & Brick	0.025 (0.122)

The bituminous material for the prime coat shall be placed one lane at a time. If a spray paver is not used, the primed lane shall remain closed until the prime coat is

fully cured and does not pickup under traffic. When placing prime coat through an intersection where it is not possible to keep the lane closed, the prime coat may be covered immediately following its application with fine aggregate mechanically spread at a uniform rate of 2 to 4 lb/sq yd (1 to 2 kg/sq m).

(2) Aggregate Bases. The prime coat shall be applied uniformly and at a rate that will provide a residual asphalt rate on the prepared surface of 0.25 lb/sq ft ± 0.01 (1.21 kg/sq m ±0.05).

The prime coat shall be permitted to cure until the penetration has been approved by the Engineer, but at no time shall the curing period be less than 24 hours for MC-30 or four hours for PEP. Pools of prime occurring in the depressions shall be broomed or squeegeed over the surrounding surface the same day the prime coat is applied.

The base shall be primed 1/2 width at a time. The prime coat on the second half/width shall not be applied until the prime coat on the first half/width has cured so that it will not pickup under traffic.

The residual asphalt rate will be verified a minimum of once per type of surface to be primed as specified herein for which at least 2000 tons (1800 metric tons) of HMA will be placed. The test will be according to the "Determination of Residual Asphalt in Prime and Tack Coat Materials" test procedure.

Prime coat shall be fully cured prior to placement of HMA to prevent pickup by haul trucks or paving equipment. If pickup occurs, paving shall cease in order to provide additional cure time, and all areas where the pickup occurred shall be repaired.

If after five days, loss of prime coat is evident prior to covering with HMA, additional prime coat shall be placed as determined by the Engineer at no additional cost to the Department."

Revise the last sentence of the first paragraph of Article 406.13(b) of the Standard Specifications to read:

"Water added to emulsified asphalt, as allowed in Article 406.02, will not be included in the quantities measured for payment."

Revise the second paragraph of Article 406.13(b) of the Standard Specifications to read:

"Aggregate for covering prime coat will not be measured for payment."

Revise the first paragraph of Article 406.14 of the Standard Specifications to read:

"**406.14 Basis of Payment.** Prime Coat will be paid for at the contract unit price per pound (kilogram) of residual asphalt applied for BITUMINOUS MATERIALS (PRIME COAT), or POLYMERIZED BITUMINOUS MATERIALS (PRIME COAT)."

Revise Article 407.02 of the Standard Specifications to read:

"**407.02 Materials.** Materials shall be according to Article 406.02, except as follows.

Item	Article/Section
(a) Packaged Rapid Hardening Mortar or Concrete	1018"

Revise Article 407.06(b) of the Standard Specifications to read:

"(b) A bituminous prime coat shall be applied between each lift of HMA according to Article 406.05(b)."

Delete the second paragraph of Article 407.12 of the Standard Specifications.

Revise the first paragraph of Article 408.04 of the Standard Specifications to read:

"**408.04 Method of Measurement.** Bituminous priming material will be measured for payment according to Article 406.13."

Revise the first paragraph of Article 408.05 of the Standard Specifications to read:

"**408.05 Basis of Payment.** This work will be paid for at the contract unit price per pound (kilogram) of residual asphalt applied for BITUMINOUS MATERIALS (PRIME COAT) or POLYMERIZED BITUMINOUS MATERIALS (PRIME COAT) and at the contract unit price per ton (metric ton) for INCIDENTAL HOT-MIX ASPHALT SURFACING."

Revise Article 1032.02 of the Standard Specifications to read:

"**1032.02 Measurement.** Asphalt binders, emulsified asphalts, rapid curing liquid asphalt, medium curing liquid asphalts, slow curing liquid asphalts, asphalt fillers, and road oils will be measured by weight.

A weight ticket for each truck load shall be furnished to the inspector. The truck shall be weighed at a location approved by the Engineer. The ticket shall show the weight of the empty truck (the truck being weighed each time before it is loaded), the weight of the loaded truck, and the net weight of the bituminous material.

When an emulsion or cutback is used for prime coat, the percentage of asphalt residue of the actual certified product shall be shown on the producer's bill of lading or attached certificate of analysis. If the producer adds extra water to an emulsion at the request of the purchaser, the amount of water shall also be shown on the bill of lading.

Payment will not be made for bituminous materials in excess of 105 percent of the amount specified by the Engineer."

Add the following to the table in Article 1032.04 of the Standard Specifications.

"SS-1vh	160-180	70-80
RS-1, CRS-1	75-130	25-55"

Add the following to Article 1032.06 of the Standard Specifications.

"(g) Non Tracking Emulsified Asphalt SS-1vh shall be according to the following.

Requirements for SS-1vh			
Test		SPEC	AASHTO Test Method
Saybolt Viscosity @ 25C,	SFS	20-200	T 72
Storage Stability, 24hr.,	%	1 max.	T 59
Residue by Evaporation,	%	50 min.	T 59
Sieve Test,	%	0.3 max.	T 59
Tests on Residue from Evaporation			
Penetration @25°C, 100g., 5 sec., dmm		20 max.	T 49
Softening Point,	°C	65 min.	T 53
Solubility,	%	97.5 min.	T 44
Orig. DSR @ 82°C,	kPa	1.00 min.	T 315"

Revise the last table in Article 1032.06(f)(2)d. of the Standard Specifications to read:

"Grade	Use
SS-1, SS-1h, RS-1, RS-2, CSS-1, CRS-1, CRS-2, CSS-1h, HFE-90, SS-1hP, CSS-1hP, SS-1vh	Prime or fog seal
PEP	Bituminous surface treatment prime
RS-2, HFE-90, HFE-150, HFE- 300, CRSP, HFP, CRS-2, HFRS-2	Bituminous surface treatment
CSS-1h Latex Modified	Microsurfacing"

Add the following to Article 1101 of the Standard Specifications.

"**1101.19 Vacuum Sweeper.** The vacuum sweeper shall have a minimum sweeping path of 52 in. (1.3 m) and a minimum blower rating of 20,000 cu ft per minute (566 cu m per minute)."

Add the following to Article 1102 of the Standard Specifications:

"**1102.06 Spray Paver.** The spreading and finishing machine shall be capable of spraying a rapid setting emulsion tack coat, paving a layer of HMA, and providing a smooth HMA mat in one pass. The HMA shall be spread over the tack coat in less than five seconds after the

application of the tack coat during normal paving speeds. No wheel or other part of the paving machine shall come into contact with the tack coat before the HMA is applied. In addition to meeting the requirements of Article 1102.03, the spray paver shall also meet the requirements of Article 1102.05 for the tank, heating system, pump, thermometer, tachometer or synchronizer, and calibration. The spray bar shall be equipped with properly sized and spaced nozzles to apply a uniform application of tack coat at the specified rate for the full width of the mat being placed."

80348

SPECIAL PROVISION
FOR
CLEANING EXISTING MANHOLES, CATCH BASINS, OR INLETS
CLEANING EXISTING STORM SEWERS AND PIPE CULVERTS

Description. Items for Cleaning of Existing Manholes, Catch Basins, Inlets, Storm Sewers, or Pipe Culverts are included in the Summary of Quantities and are to be used at the direction of the Engineer. The Manholes; Catch Basins; Inlets; Storm Sewers or Pipe Culverts with a diameter of 36 inches or less shall be cleaned of silt, debris or other foreign matter of any kind and will be free from such accumulation at the time of final inspection. The accumulations shall be removed from the job site and disposed of in a manner meeting appropriate regulations.

Basis of Payment. This work shall be paid for at the contract unit price each for Cleaning Existing Manholes, Cleaning Existing Catch Basins and Cleaning Existing Inlets; and per foot for Cleaning Existing Storm Sewers and Cleaning Existing Pipe Culverts. The cost shall include all labor, materials and disposal cost for removal of accumulations from the job site.

PROPOSED LOCATIONS

1. 107th Street - 88th Avenue to Kean Avenue
2. 103rd Street - 88th Avenue to Kean Avenue
3. Plainfield Road - Willow Springs Rd to East Avenue
4. Kedzie Avenue - At Governors Highway
5. Kedzie Avenue - 183rd Street to 175th Street
6. Sauk Trail - Cicero Avenue to Governors Highway
7. Wolf Road - at 139th Street

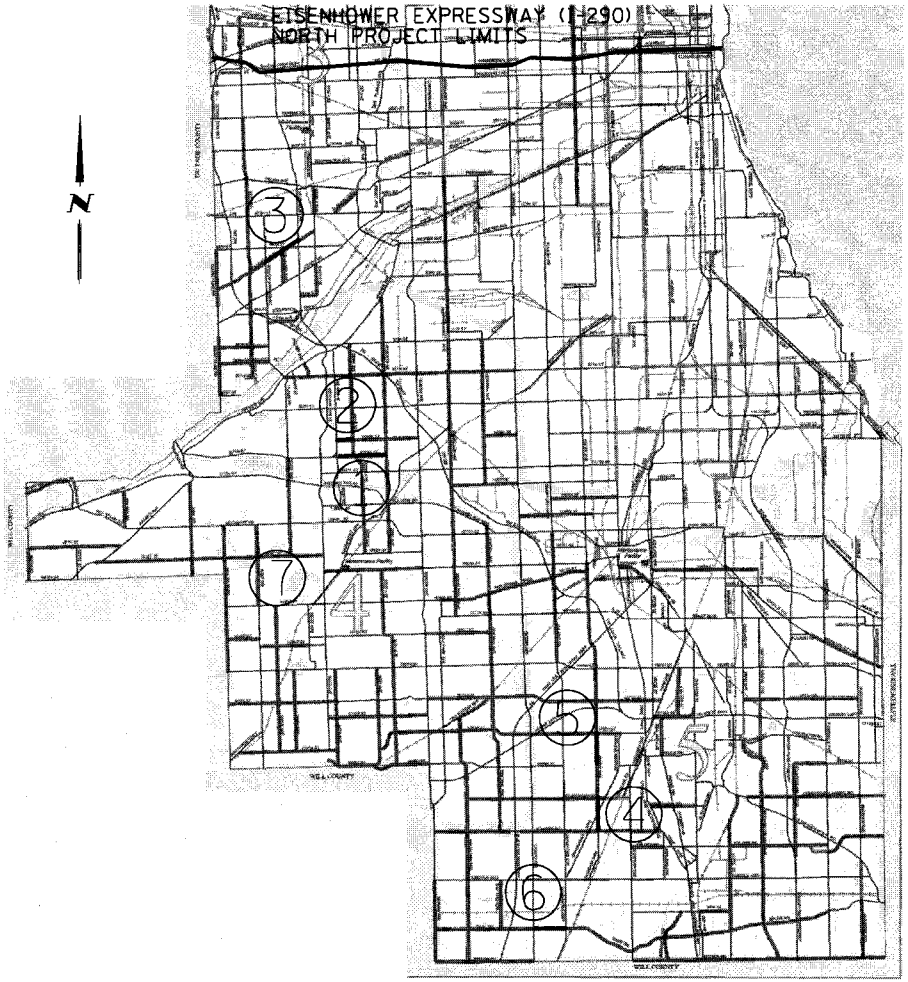

VARIOUS LOCATIONS	COUNTY HIGHWAY: VARIOUS FISCAL YEAR: 2015 SECTION: 14-PPRPS-01-PV	COUNTY OF COOK DEPARTMENT OF TRANSPORTATION AND HIGHWAYS	COMPUTED: KLP DRAWN: KLP CHECKED: HPS	REVISIONS	DATE 11/19/2013	PAVEMENT MAINTENANCE – SOUTH PROPOSED LOCATIONS	P-1 NOT TO SCALE SHEET

ITEM NO.	107TH QUANTITY	103RD QUANTITY	PLAINFIELD QUANTITY	KEDZIE AT GOVERNORS HWY	KEDZIE-183RD TO 175TH	SAUK TRAIL QUANTITY	139TH & WOLF QUANTITY	TOTAL QUANTITY	UNIT	PAY ITEMS
1	-	45.00	256.00	-	573.00	122.00	-	996	SQ. YD.	AGGREGATE BASE COURSE, TYPE B, 4 IN
2	-	-	-	-	-	-	-	50	SQ. YD.	AGGREGATE BASE COURSE, TYPE B, 8 IN
3	106.00	-	93.00	-	-	-	-	199	TON	AGGREGATE SHOULDERS, TYPE B
4	-	-	-	7,680.00	39,225.00	39,077.00	-	85,982	SQ. YD.	DIAMOND GRINDING CONCRETE PAVEMENT
5	700.00	335.00	-	504.00	1,391.00	2,343.00	-	5,273	SQ. YD.	SUBBASE GRANULAR MATERIAL, TYPE B, 6 IN
6	7,507.00	6,882.00	22,104.00	-	-	-	-	36,493	POUND	BITUMINOUS MATERIALS (PRIME COAT)
7	249.00	310.00	2,837.00	-	-	-	-	3,396	FOOT	CUTTING HOT-MIX ASPHALT SURFACE
8	1,402.00	1,245.00	-	-	-	-	-	2,647	TON	HOT-MIX ASPHALT BINDER COURSE, IL-19.0, N70
9	-	-	-	-	-	-	-	50	SQ. YD.	HOT-MIX ASPHALT DRIVEWAY SURFACE REMOVAL, 4"
10	-	-	-	-	26.00	-	-	26	TON	HOT-MIX ASPHALT SURFACE COURSE, MIX "C", IL-12.5 OR 9.5, N50
11	1,090.00	1,000.00	4,266.00	-	-	-	-	6,356	TON	HOT-MIX ASPHALT SURFACE COURSE, MIX "D", IL-9.5, N70
12	-	-	32,352.00	-	225.00	-	-	32,577	SQ. YD.	HOT-MIX ASPHALT SURFACE REMOVAL, 2 IN
13			1,117.00					1,117	SQ. YD.	HOT-MIX ASPHALT SURFACE REMOVAL, 2.5 IN
14	11,122.00	10,196.00	-	-	-	-	-	21,318	SQ. YD.	HOT-MIX ASPHALT SURFACE REMOVAL, 4 IN
15	-	-	-	38.00	-	-	-	38	SQ. YD.	HOT-MIX ASPHALT SHOULDERS, IL-19.0, N30, 12 IN
16	-	89.00	-	-	178.00	-	-	267	SQ. YD.	HOT-MIX ASPHALT SHOULDERS, IL-19.0, N30, 6 IN
17	-	-	470.00	-	-	-	-	470	TON	POLYMERIZED LEVELING BINDER (MACHINE METHOD), IL-4.75, N50
18	173.00	256.00	2,500.00	-		-	-	2,929	FOOT	TEMPORARY BUTT JOINTS
19	-	1.00	-	-	5.00	5.00	-	11	EACH	CATCH BASINS TO BE ADJUSTED
20		-		460.00	1,675.00	2,213.00		4,348	SQ. YD.	PAVEMENT FABRIC
21	-	400.00	2,300.00	-	3,000.00	1,091.00	-	6,791	SQ. FT.	PORTLAND CEMENT CONCRETE SIDEWALK, 5 IN
22	-	-	-	-	-	-	-	100	SQ. YD.	PORTLAND CEMENT CONCRETE DRIVEWAY PAVEMENT, 8 IN
23	-	-	-	400.00	530.00	2,013.00	-	2,943	SQ. YD.	PORTLAND CEMENT CONCRETE PAVEMENT, 10 IN
24	-	-	-	-	410.00	450.00	-	860	FOOT	COMBINATION CURB AND GUTTER REMOVAL
25	-	-	-	-	-	-	-	100	SQ. YD.	DRIVEWAY PAVEMENT REMOVAL
26	-	-	-	-	200.00	100.00	-	300	SQ. FT.	MEDIAN REMOVAL
27	-	-	-	400.00	530.00	2,013.00	-	2,943	SQ. YD.	PAVEMENT REMOVAL
28	-	-	-	-	-	1,091.00	-	1,091	SQ. FT.	SIDEWALK REMOVAL
29	-	-	-	-	-	-	-	100	FOOT	SAW CUTS
30	-	140.00	1,460.00	340.00	770.00	1,470.00	-	4,180	FOOT	DETECTOR LOOP, TYPE I
31	117.00	58.00	-	77.00	237.00	361.00	-	850	CU. YD.	EARTH EXCAVATION
32	94.00	100.00	352.00	-	-	-	800.00	1,346	FOOT	GRADING AND SHAPING DITCHES
33	-	-	-	12.00	5.00	5.00	-	22	EACH	FRAMES AND LIDS TO BE ADJUSTED
34	-	2.00	5.00	-	-	-	-	7	EACH	FRAMES AND LIDS TO BE ADJUSTED, SPECIAL
35	-	1.00	-	1.00	4.00	4.00	-	10	EACH	VALVE VAULTS TO BE RECONSTRUCTED
36	-	1.00	-	2.00	5.00	5.00	-	13	EACH	MANHOLES TO BE RECONSTRUCTED
37	-	-	-	1.00	-	-	-	1	EACH	CATCH BASINS TO BE RECONSTRUCTED
38	-	1.00	-	-	-	-	-	1	EACH	WATERPROOFING SANITARY FRAMES AND LIDS TO BE ADJUSTED, SPECIAL
39	-	-	-	-	-	-	-	9	POUND	NITROGEN FERTILIZER NUTRIENT
40	-	-	-	-	-	-	-	9	POUND	PHOSPHORUS FERTILIZER NUTRIENT
41	-	-	-	-	-	-	-	9	POUND	POTASSIUM FERTILIZER NUTRIENT
42	-	-	-	-	-	-	-	484	SQ. YD.	SODDING, SALT TOLERANT
43	-	-	-	-	-	-	-	5	UNIT	SUPPLEMENTAL WATERING
44	-	-	-	-	-	-	-	484	SQ. YD.	TOPSOIL FURNISH AND PLACE, 4 IN
45	923.00	3,146.00	19,189.00	1,878.00	10,240.00	7,643.00	-	43,019	SQ. FT.	ERADICATION OF EXISTING PAVEMENT MARKING
46	-	-	-	115.00	631.00	612.00	-	1,358	SQ. FT.	MODIFIED URETHANE PAVEMENT MARKING - LETTERS AND SYMBOLS

ITEM NO.	107TH QUANTITY	103RD QUANTITY	PLAINFIELD QUANTITY	KEDZIE AT GOVERNORS HWY	KEDZIE-183RD TO 175TH	SAUK TRAIL QUANTITY	139TH & WOLF QUANTITY	TOTAL QUANTITY	UNIT	PAY ITEMS
47	-	-	-	3,726.00	20,598.00	18,652.00	-	42,976	FOOT	MODIFIED URETHANE PAVEMENT MARKING, - LINE 4 IN
48	-	-	-	408.00	2,570.00	3,018.00	-	5,996	FOOT	MODIFIED URETHANE PAVEMENT MARKING - LINE 6 IN
49	-	-	-		-	-	-	50	FOOT	MODIFIED URETHANE PAVEMENT MARKING, - LINE 8 IN
50	-	-	-	-	815.00	324.00	-	1,139	FOOT	MODIFIED URETHANE PAVEMENT MARKING - LINE 12 IN
51	-	-	-	159.00	323.00	327.00	-	809	FOOT	MODIFIED URETHANE PAVEMENT MARKING - LINE 24 IN
52	191.00	191.00	903.00	-	-	-	-	1,285	SQ. FT.	THERMOPLASTIC PAVEMENT MARKING - LETTERS AND SYMBOLS
53	1,086.00	7,267.00	40,835.00	-	-	-	-	49,188	FOOT	THERMOPLASTIC PAVEMENT MARKING - LINE 4 IN
54	451.00	451.00	2,078.00	-	-	-	-	2,980	FOOT	THERMOPLASTIC PAVEMENT MARKING - LINE 6 IN
55	-	56.00	2,151.00	-	-	-	-	2,207	FOOT	THERMOPLASTIC PAVEMENT MARKING - LINE 8 IN
56	-	126.00	1,562.00	-	-	-	-	1,688	FOOT	THERMOPLASTIC PAVEMENT MARKING - LINE 12 IN
57	72.00	72.00	320.00	-	-	-	-	464	FOOT	THERMOPLASTIC PAVEMENT MARKING - LINE 24 IN
58	750.00	420.00	1,500.00	625.00	2,000.00	2,600.00	20.00	7,915	FOOT	PAVEMENT MARKING TAPE, TYPE III 6"
59	-	-	-	-	-	-	-	50	FOOT	COMBINATION CONCRETE CURB AND GUTTER, TYPE B-6.12
60	-	-	-	84.00	360.00	450.00	-	894	FOOT	COMBINATION CONCRETE CURB AND GUTTER, TYPE B-6.24
61	-	-	-	43.00	50.00	-	-	93	FOOT	COMBINATION CONCRETE CURB AND GUTTER, TYPE M-2.12
62	-	69.00	78.00	15.00	100.00	130.00	-	392	EACH	RAISED REFLECTIVE PAVEMENT MARKER
63	-	69.00	78.00	15.00	100.00	130.00	-	392	EACH	RAISED REFLECTIVE PAVEMENT MARKER REMOVAL
64	-	-	-	73.00	200.00	100.00	-	373	SQ. FT.	CONCRETE MEDIAN, TYPE C-4
65	-	-	-	15.00	140.00	50.00	-	205	SQ. YD.	CLASS B PATCHES, TYPE I, 10 IN
66	-	-	-	1,300.00	5,190.00	1,125.00	-	7,615	SQ. YD.	CLASS B PATCHES, TYPE II, 10 IN
67	-	-	-	-	440.00	50.00	-	490	SQ. YD.	CLASS B PATCHES, TYPE III, 10 IN
68	-	-	-	60.00	705.00	150.00	-	915	SQ. YD.	CLASS B PATCHES, TYPE IV, 10 IN
69	100.00	100.00	670.00	-		-	-	870	SQ. YD.	CLASS D PATCHES, TYPE III, 10 IN
70	700.00	250.00	335.00	-		-	-	1,285	SQ. YD.	CLASS D PATCHES, TYPE IV, 10 IN
71	-	-	93.00	-	-	-	-	93	SQ. YD.	PAVEMENT REPLACEMENT
72	468.00	494.00	1,757.00	-	-	-	-	2,719	POUND	CRACK FILLING
73	94.00	99.00	352.00	-	-	-	-	545	FOOT	CRACK ROUTING AND SEALING
74	-	-	-	1,500.00	2,200.00	1,000.00	-	4,700	FOOT	CRACK AND JOINT ROUTING AND SEALING
75	6.00	6.00	22.00	-	-	-	-	34	TON	MIXTURE FOR CRACKS, JOINTS AND FLANGEWAYS
76	-	200.00	1,150.00	-	900.00	500.00	-	2,750	SQ. FT.	DETECTABLE WARNINGS
77	-	1.00	5.00	1.00	3.00	4.00	-	14	EACH	MAINTENANCE OF EXISTING TRAFFIC SIGNAL INSTALLATION
78	1.00	1.00	1.00	-	-	-		3	EACH	CONSTRUCTING TEST STRIP
79		4.00			6.00			10	EACH	TRAFFIC BARRIER TERMINAL, TYPE 1, SPECIAL
80	2.00	2.00		1.00	3.00	3.00		11	EACH	SURVEY MONUMENTS
81	71.00	75.00	264.00					410	FOOT	CLEANING EXISTING PIPE CULVERTS, VARIABLE THICKNESSES
82					380.00			380	FOOT	GUARDRAIL REMOVAL
83					100.00			100	FOOT	STEEL PLATE BEAM GUARDRAIL, TYPE A
84	-	-	-	-	-	-	2.00	2	EACH	FLARED END SECTION TO BE REMOVED
85	-	-	-	-	-	-	2.00	2	EACH	FLARED END SECTION TO BE RELOCATED
86	-	-	-	-	-	-	100.00	100	FOOT	STORM SEWER REMOVAL, 15 IN.
87	-	-	-	-	-	-	100.00	100	FOOT	STORM SEWERS, TYPE 1 (RCCP CLASS IV) 15 IN.
88	-	-	-	-	-	-	1.00	1	EACH	REMOVING MANHOLES
89	-	-	-	-	-	-	1.00	1	EACH	MANHOLES, TYPE A, 5. FT.DIA. WITH FRAMES AND LIDS
90	-	-	-	-	-	-	1.00	1	EACH	REMOVING CATCH BASINS
91	-	-	-	-	-	-	1.00	1	EACH	CATCH BASINS, TYPE A, 4 FT. DIA. WITH FRAMES AND GRATES
92	-	-	-	-	-	-	1.00	1	EACH	PLUGGING EXISTING DRAINS AND SEWERS (OVER 12 IN.)
93	-	-	-	-	-	-	-	1	L. SUM	CONSTRUCTION LAYOUT STAKES AND SURVEY CONTROL POINTS

ITEM NO.	107TH QUANTITY	103RD QUANTITY	PLAINFIELD QUANTITY	KEDZIE AT GOVERNORS HWY	KEDZIE-183RD TO 175TH	SAUK TRAIL QUANTITY	139TH & WOLF QUANTITY	TOTAL QUANTITY	UNIT	PAY ITEMS
94	0.143	0.143	0.143	0.143	0.143	0.143	0.143	1	L. SUM	TRAFFIC CONTROL
95	0.143	0.143	0.143	0.143	0.143	0.143	0.143	1	L. SUM	MOBILIZATION
96	-	-	-	-	-	-	-	6	CAL. MO.	ENGINEER'S FIELD OFFICE, TYPE A
97	-	-	-	-	-	-	-	80,000	UNIT	CONTRACT EXTRA WORK
98								1	L. SUM	CRUSHED STONE (TEMPORARY USE)
99	1.000	1.000	1.000	1.000	1.000	1.000	-	6	EACH	REBUILD EXISTING HEAVY DUTY HANDHOLE
100	1.000	1.000	1.000	1.000	1.000	1.000	-	6	EACH	REBUILD EXISTING HANDHOLE

GENERAL NOTES

1. STANDARD SPECIFICATIONS REFER TO THE ILLINOIS DEPARTMENT OF TRANSPORTATION STANDARD SPECIFICATIONS FOR ROAD AND BRIDGE CONSTRUCTION, ADOPTED JANUARY 1, 2012 AND ALL ADDENDA AND SUPPLEMENTAL SPECIFICATIONS.

2. IN THE EVENT THAT UNSUITABLE MATERIALS, INCLUDING VOIDS, SOFT SPOTS OR OTHER DEFECTS, ARE ENCOUNTERD IN THE AREA OF CLASS B, OR D PATCHING, THE ENGINEER SHALL DIRECT THE CONTRACTOR TO REMOVE AND REPLACE THE UNSUITABLE MATERIALS WITH SUBBASE GRANULAR MATERIAL, TYPE B (6 IN.). A QUANTITY OF 1700 SQ. YD. OF SUBBASE GRANULAR MATERIAL, TYPE B (6 IN.) HAS BEEN INCLUDED IN THE SUMMARY OF QUANTITIES FOR THIS PURPOSE. THE COST OF REMOVAL AND DISPOSAL OF THESE UNSUITABLE MATERIALS SHALL NOT BE PAID FOR SEPARATELY, BUT SHALL BE INCLUDED IN THE UNIT PRICE PER SQ. YD. FOR SUBBASE GRANULAR MATERIAL, TYPE B (6 IN.). DISPOSAL OF UNSUITABLE MATERIAL SHALL BE IN ACCORDANCE WITH SECTION 202.03 OF THE STANDARD SPECIFICATIONS FOR ROAD AND BRIDGE CONSTRUCTION.

3. IN THE AREA OF CONCRETE PAVEMENT WHEREVER A CLASS B PATCHES HAS BEEN CALLED FOR, THE CLASS B PATCHES CAN EXTEND UPTO THE 1 FOOT INTO THE ADJACENT PAVEMENT LANE WHEREVER IT REQUIRED AS PER THE DIRECTION OF THE ENGINEER. EXTENSION OF 1 FOOT PATCH INTO THE ADJACENT LANE SHALL BE INCLUDED WITH THE CONTRACT UNIT BID PRICE PER SQ.YD.FOR CLASS B PATCHES. ADDITIONAL TRAFFIC CONTROL WHICH MAY BE REQUIRED TO MEET THE ABOVE MENTIONED CONSTRUCTION REQUIREMENT SHALL NOT BE PAID FOR SEPARATELY, BUT CONSIDERED INCLUDED IN THE CONTRACT UNIT BID PRICE FOR TRAFFIC PROTECTION.

4. AT THE DISCRETION OF THE RESIDENT ENGINEER, DISTRESSED MEDIAN THAT IS BROKEN OR SETTLED SHALL BE REMOVED AND REPLACED WITH THE SAME KIND AS REMOVED. REMOVAL OF THE HMA PORTION IN TYPE M-7 MEDIAN AND BARRIER MEDIAN SHALL BE PAID FOR AT THE UNIT BID PRICE PER SQ.YD. FOR PAVEMENT REMOVAL, REMOVAL OF C-4 MEDIAN SHALL BE PAID FOR AT THE UNIT BID PRICE PER SQ FT. FOR MEDIAN REMOVAL.

5. ALL BREAKS IN EDGE OF PAVEMENT AND MEDIAN ALIGNMENT SHALL BE TRANSITIONED BY MEANS OF A 40-FOOT CURVE.

6. ALL PAVEMENT STUBS SHALL BE 2'-0".

7. THE CONTRACTOR IS DIRECTED TO TELEPHONE J.U.L.I.E. (800-892-0123) FOR UTILITY LOCATIONS.

8. CURB AND GUTTER SHALL BE REMOVED AND REPLACED AT LOCATIONS DIRECTED BY THE ENGINEER. FULL DEPTH SAWING OF THE CURB AND GUTTER SHALL BE INCLUDED WITH THE PAY ITEM OF COMBINATION CONCRETE CURB AND GUTTER REMOVAL. WHERE CURB BARS DO NOT EXIST OR ARE CORRODED BEYOND 25%

GENERAL NOTES

SECTION LOSS, THEY SHALL BE REPLACED WITH NO. 6 TIE BARS AT 24 IN. CENTERS IN ACCORDANCE WITH THE LONGITUDINAL CONSTRUCTION JOINT DETAIL ON IDOT STANDARD NO. 420001 AND ARTICLE 420.10(B) OF THE STANDARD SPECIFICATIONS. NO ADDITIONAL PAYMENT FOR DRILLING AND REPLACEMENT OF BARS SHALL BE MADE. TRANSVERSE EXPANSION JOINTS ARE TO BE INSTALLED WHEREVER EXISTING CURB AND GUTTER ABUTS NEW REPLACEMENT CURB AND GUTTER. PAYMENT FOR THE TRANSVERSE CONTRACTION JOINTS SHALL BE INCLUDED WITH THE PAY ITEM FOR THE REPLACEMENT COMBINATION CONCRETE CURB AND GUTTER.

9. PRIOR TO DIAMOND GRINDING, SEALANT IN EXISTING CONTRACTION JOINTS SHALL BE REMOVED UPON INSPECTION BY THE ENGINEER, AND RESEALED AFTER DIAMOND GRINDING. THIS WORK SHALL BE PAID FOR PER FOOT FOR SEALING EXISTING TRANSVERSE JOINT.

10. WHEN ORDERED BY THE ENGINEER, THE CONTRACTOR SHALL USE THE FOLLOWING METHOD TO ALLAY DUST AND PREVENT A NUISANCE WITHIN THE LIMITS OF THE CONSTRUCTION SITE. DUST SHALL BE CONTROLLED BY THE UNIFORM APPLICATION OF SPRINKLED WATER AND SHALL BE APPLIED ONLY WHEN DIRECTED BY THE ENGINEER, IN A MANNER MEETING HIS APPROVAL. CALCIUM CHLORIDE SHALL NOT BE USED FOR THIS PURPOSE. ALL EQUIPMENT USED FOR THIS WORK SHALL MEET WITH THE ENGINEER'S APPROVAL. THIS WORK SHALL CONSIST OF THE EXCLUSIVE CONTROL OF DUST RESULTING FROM CONSTRUCTION OPERATIONS AND IS NOT INTENDED FOR USE IN THE COMPACTION OF EARTH EMBANKMENTS, AS SPECIFIED UNDER ARTICLE 205 OF THE STANDARD SPECIFICATIONS. NO EXTRA COMPENSATION SHALL BE ALLOWED THE CONTRACTOR FOR THIS WORK.

11. EXISTING SIDEWALK SHALL BE REMOVED AND REPLACED 5 FT. BEYOND EXISTING KEYSTONE CORNERS, OR AS DIRECTED BY THE ENGINEER TO ACCOMMODATE ADA RAMP. ALL PROPOSED SIDEWALKS SHALL BE FIVE INCHES IN THICKNESS UNLESS OTHERWISE NOTED.

12. CARE SHALL BE TAKEN TO PROVIDE FOR A STRAIGHT EDGE BUTT WHERE PROPOSED PAVEMENT MEETS EXISTING HOT-MIX ASPHALT PAVEMENT. THIS CUTTING SHALL BE INCLUDED IN THE CONTRACT UNIT PRICE BID PER FOOT OF CUTTING HOT-MIX ASPHALT SURFACE.

13. ALL ENTRANCES SHALL BE KEPT OPEN TO TRAFFIC DURING THE CONSTRUCTION PERIOD AS DIRECTED BY THE ENGINEER.

14. THE CONTRACTOR WILL BE REQUIRED TO PROVIDE AND MAINTAIN ACCESS TO ALL PRIVATE PROPERTY DURING THE CONSTRUCTION PERIOD.

15. THIS WORK SHALL BE PAID FOR AT THE CONTRACT UNIT BID PRICE, LUMP SUM, FOR CRUSHED STONE (TEMPORARY USE). IT HAS BEEN ESTIMATED THAT 1000 TONS OF CRUSHED STONE (TEMPORARY USE) WILL BE NEEDED FOR THIS IMPROVEMENT.

GENERAL NOTES

THIS ESTIMATED QUANTITY IS GIVEN FOR THE BIDDER'S INFORMATION ONLY AND THE COUNTY TAKES NO RESPONSIBILITY FOR ITS ACCURACY. THE APPLICATION SHALL CONFORM TO THE SPECIAL PROVISION FOR CRUSHED STONE (TEMPORARY USE).

16. ALL INTERSECTING STREETS SHALL BE KEPT OPEN TO TRAFFIC, AS DIRECTED BY THE RESIDENT ENGINEER.

17. DURING CONSTRUCTION, TEMPORARY PAVEMENT MARKINGS SHALL BE CONSIDERED AS INCIDENTAL TO THE COST OF THE PAY ITEM "TRAFFIC PROTECTION". TEMPORARY PAVEMENT MARKINGS ON TEMPORARY PAVEMENT SURFACES OR ON PAVEMENT SURFACES THAT WILL BE PATCHED OR DIAMOND GROUND, AS PART OF THIS CONTRACT MAY BE PAINT OR TAPE. TEMPORARY PAVEMENT MARKINGS ON FINAL PAVEMENT SURFACES OR ON PAVEMENT SURFACES THAT WILL NOT BE CONSTRUCTED, AS PART OF THIS CONTRACT MUST BE TAPE.

18. PAVEMENT MARKING TAPE, TYPE III, IF REQUIRED AND AT THE DIRECTION OF THE RESIDENT ENGINEER, SHALL BE APPLIED TO THE FINAL PAVEMENT SURFACE PRIOR TO APPLICATION OF PERMANENT PAVEMENT MARKING, IN ACCORDANCE WITH SECTIONS 703 AND 1095 OF THE STANDARD SPECIFICATIONS. THE COST OF REMOVAL OF THE TAPE SHALL BE CONSIDERED AS INCLUDED IN THE CONTRACT UNIT PRICE PER FOOT OF PAVEMENT MARKING TAPE, TYPE III.

19. THE PERMANENT PAVEMENT MARKING SHALL BE APPLIED TO THE FINAL FINISHED SURFACE ONLY AFTER THE COMPLETION OF THE DIAMOND GRINDING OR RESURFACING WORK

20. THE CONTRACTOR SHALL NOTIFY THE COOK COUNTY TRAFFIC OPERATIONS DIVISION AT (847) 827-7824 OR (312) 603-1660, TEN (10) DAYS PRIOR TO THE ESTIMATED DATE THAT THE ROADWAY WILL BE READY FOR THE APPLICATION OF PERMANENT PAVEMENT MARKING.

21. "DRIVEWAY ENTRANCE" SIGNS SHALL BE MAINTAINED FOR ALL ACCESS POINTS TO COMMERCIAL PROPERTY.

22. PATCHES EXCEEDING 40 FEET IN LENGTH PER FULL WIDTH LANE SHALL BE MEASURED AND PAID FOR AT THE CONTRACT UNIT BID PRICE PER SQ. YD. OF PAVEMENT REMOVAL AND PER SQ. YD. OF P.C. CONCRETE PAVEMENT (10 IN.). PATCHES MEASURING 40 FEET AND LESS IN LENGTH SHALL BE MEASURED AND PAID FOR AT THE CONTRACT UNIT BID PRICE PER SQ. YD. OF CLASS B PATCHES (10 IN.) OF THE PROPER TYPE. THE EXISTING PAVEMENT SHALL BE SAW CUT TRANSVERSELY FULL DEPTH AT EACH END OF A LANE PATCH. IF A TWO-LANE STAGE REMOVAL IS REQUIRED, THE LONGITUDINAL JOINT SHALL BE CUT FULL DEPTH. ALL FULL DEPTH SAWING SHALL BE INCLUDED WITH THE CONTRACT UNIT BID PRICE PER SQ. YD. OF PAVEMENT REMOVAL OR CLASS B PATCHES, WHICH

GENERAL NOTES

SHALL INCLUDE EXCAVATION AND DISPOSAL OF THE EXISTING DISTRESSED PAVEMENT.

23. AS INDICATED IN ARTICLE 442.06(A)(2) OF THE IDOT STANDARD SPECIFICATIONS FOR CLASS B PATCHES, PAVEMENT FABRIC SHALL BE PLACED IN ALL TYPE III AND TYPE IV PATCHES. FURNISHING AND PLACING OF PAVEMENT FABRIC IN CLASS B PATCHES, TYPE III AND TYPE IV SHALL BE PAID FOR AT THE CONTRACT UNIT BID PRICE PER SQ. YD. OF PAVEMENT FABRIC. A SUFFICIENT QUANTITY OF PAVEMENT FABRIC HAS BEEN ADDED TO THE SUMMARY OF QUANTITIES FOR THIS PURPOSE.

24. ALL CONCRETE PATCHING SHALL BE REMOVED AND REPLACED TO MEET EXISTING LONGITUDINAL JOINTS. ADDITIONAL TRAFFIC CONTROL WHICH MAY BE REQUIRED TO MEET THE ABOVE MENTIONED CONSTRUCTION REQUIREMENT SHALL NOT BE PAID FOR SEPARATELY, BUT CONSIDERED INCLUDED IN THE CONTRACT UNIT BID PRICE FOR TRAFFIC PROTECTION.

25. CRACKS IN AREAS NOT DESIGNATED FOR REPLACEMENT SHALL BE CLEANED AND SEALED. THIS WORK SHALL BE PAID FOR PER FOOT FOR CRACK AND JOINT ROUTING AND SEALING.

26. ALL SIGNING AND STRIPING SHALL CONFORM TO THE CURRENT EDITION (2009) OF THE FEDERAL HIGHWAY ADMINISTRATION AND ILLINOIS SUPPLEMENT TO THE MANUAL OF UNIFORM TRAFFIC CONTROL DEVICES.

27. CARE SHOULD BE TAKEN IN REMOVING THE EXISTING CONCRETE PAVEMENT SO AS NOT TO DAMAGE ANY CONCRETE PAVEMENT, CURB AND GUTTER, OR REINFORCEMENT BARS THAT REMAIN IN PLACE. WHENEVER ANY TIE BARS ARE MISSING, THEY SHALL BE REPLACED WITH NO. 5 TIE BARS AT 24 IN. CENTERS IN ACCORDANCE WITH THE LONGITUDINAL CONSTRUCTION JOINT DETAIL ON IDOT STANDARD NO. 420001 AND ARTICLE 420.05(B) OF THE STANDARD SPECIFICATIONS, AND AS DIRECTED BY THE ENGINEER. DOWEL BARS SHALL BE DRILLED AND INSERTED IN ACCORDANCE WITH IDOT STANDARD NO. 442101-07 AND AS DIRECTED BY THE ENGINEER. THE FURNISHING AND INSTALLING OF TIE BARS AND DOWEL BARS SHALL NOT BE PAID FOR SEPARATELY BUT SHALL BE INCLUDED WITHTHE CONTRACT UNIT BID PRICE PER SQ. YD. OF P.C. CONCRETE PAVEMENT (10 IN.) AND CLASS B PATCHES (10 IN.).

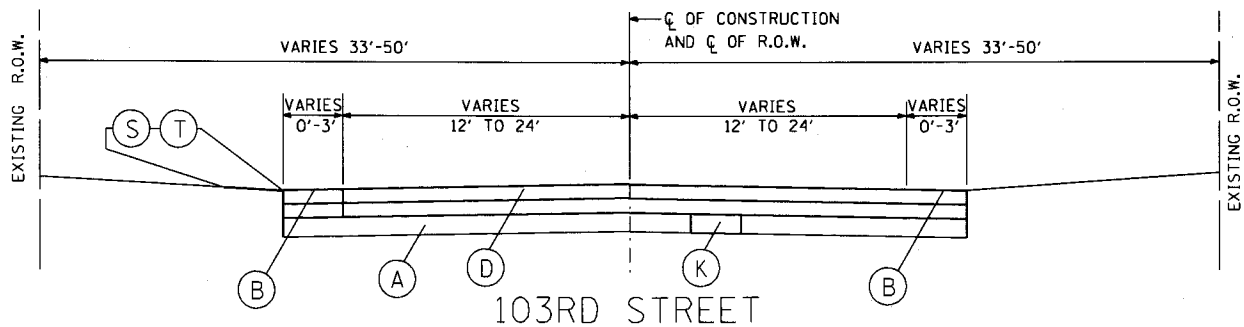

103RD STREET

4 IN. MILL & RESURFACE WITH SHOULDER

LEGEND:

(A) EXISTING BASE COURSE

(B) EXISTING SHOULDER (TO BE MILLED AND RESURFACED)

(C) EXISTING CONCRETE CURB AND GUTTER

(D) PROPOSED HOT-MIX ASPHALT SURFACE COURSE, MIX "D", IL-12.5 OR 9.5, N70 (1.75 IN.)

(E) PROPOSED HOT-MIX ASPHALT BINDER COURSE, IL-19.0, N70 (2.25 IN.)

(F) PROPOSED POLYMERIZED LEVELING BINDER (MACHINE METHOD) IL-4.75, N70 (0.75 IN.)

(G) PROPOSED COMBINATION CONCRETE CURB AND GUTTER (WHERE REQUIRED)

(H) PROPOSED SUBBASE GRANULAR MATERIAL TYPE B (6 IN.) (WHERE REQUIRED)

(J) EXISTING PCC PAVEMENT

(K) CLASS D PATCHES (AT THE DIRECTION OF THE ENGINEER)

(S) SODDING (WHERE REQUIRED)

(T) FURNISHING AND PLACING TOPSOIL (4 IN.) (WHERE REQUIRED)

NOT TO SCALE

COUNTY OF COOK
DEPARTMENT OF TRANSPORTATION
AND HIGHWAYS

TYPICAL CROSS SECTIONS
107TH STREET
KEAN AVENUE TO 88TH AVENUE

COMPUTED: KLP
DRAWN: KLP
CHECKED: MPS

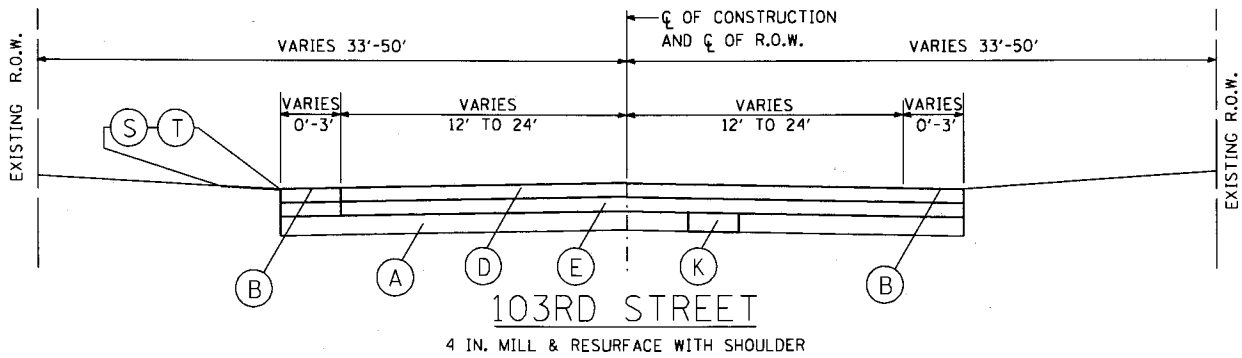

LEGEND:

(A) EXISTING BASE COURSE

(B) EXISTING SHOULDER (TO BE MILLED AND RESURFACED)

(C) EXISTING CONCRETE CURB AND GUTTER

(D) PROPOSED HOT-MIX ASPHALT SURFACE COURSE, MIX "D", IL-12.5 OR 9.5, N70 (1.75 IN.)

(E) PROPOSED HOT-MIX ASPHALT BINDER COURSE, IL-19.0, N70 (2.25 IN.)

(F) PROPOSED POLYMERIZED LEVELING BINDER (MACHINE METHOD) IL-4.75, N70 (0.75 IN.)

(G) PROPOSED COMBINATION CONCRETE CURB AND GUTTER (WHERE REQUIRED)

(H) PROPOSED SUBBASE GRANULAR MATERIAL TYPE B (6 IN.) (WHERE REQUIRED)

(J) EXISTING PCC PAVEMENT

(K) CLASS D PATCHES (AT THE DIRECTION OF THE ENGINEER)

(S) SODDING (WHERE REQUIRED)

(T) FURNISHING AND PLACING TOPSOIL (4 IN.) (WHERE REQUIRED)

NOT TO SCALE

COUNTY OF COOK
DEPARTMENT OF TRANSPORTATION
AND HIGHWAYS

TYPICAL CROSS SECTIONS
103RD STREET
KEAN AVENUE TO 88TH AVENUE

COMPUTED: KLP
DRAWN: KLP
CHECKED: MPS

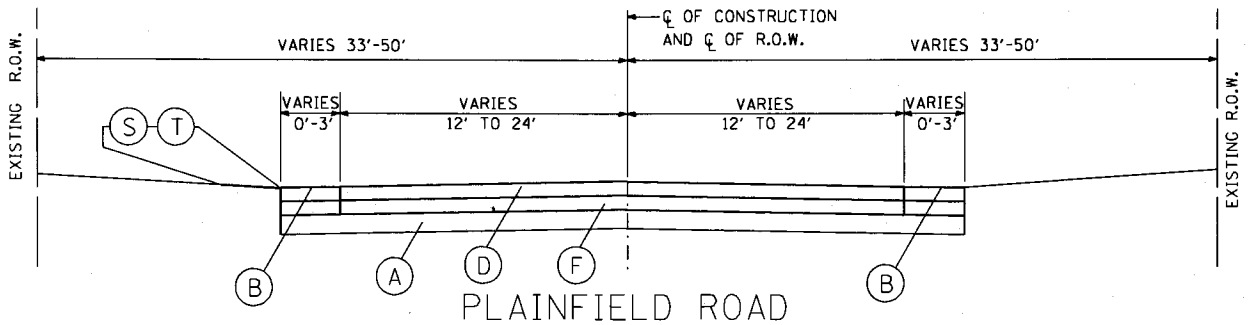

PLAINFIELD ROAD

WILLOW SPRINGS ROAD TO SOUTH PARK AVENUE

2.5 IN. MILL & RESURFACE WITH SHOULDER

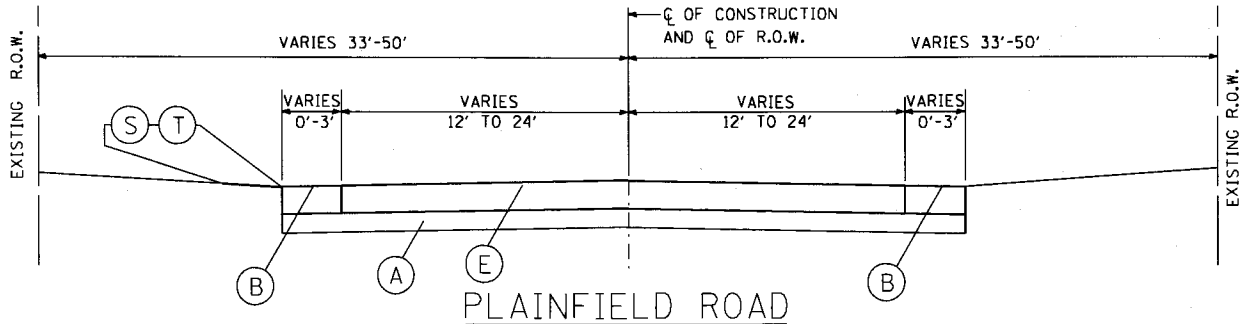

PLAINFIELD ROAD

SOUTH PARK AVENUE TO EAST AVENUE

2.0 IN. MILL & RESURFACE WITH SHOULDER

LEGEND:

(A) EXISTING BASE COURSE

(B) EXISTING SHOULDER (TO BE MILLED AND RESURFACED)

(C) EXISTING CONCRETE CURB AND GUTTER

(D) PROPOSED HOT-MIX ASPHALT SURFACE COURSE, MIX "D", IL-12.5 OR 9.5, N70 (1.75 IN.)

(E) PROPOSED HOT-MIX ASPHALT SURFACE COURSE, MIX "D", IL-12.5 OR 9.5, N70 (2 IN.)

(F) PROPOSED POLYMERIZED LEVELING BINDER (MACHINE METHOD) IL-4.75, N70 (0.75 IN.)

(S) SODDING (WHERE REQUIRED)

(T) FURNISHING AND PLACING TOPSOIL (4 IN.) (WHERE REQUIRED)

NOT TO SCALE

COUNTY OF COOK
DEPARTMENT OF TRANSPORTATION
AND HIGHWAYS

TYPICAL CROSS SECTIONS
PLAINFIELD ROAD
WILLOW SPRINGS ROAD TO EAST AVENUE

COMPUTED: KLP
DRAWN: KLP
CHECKED: HPS

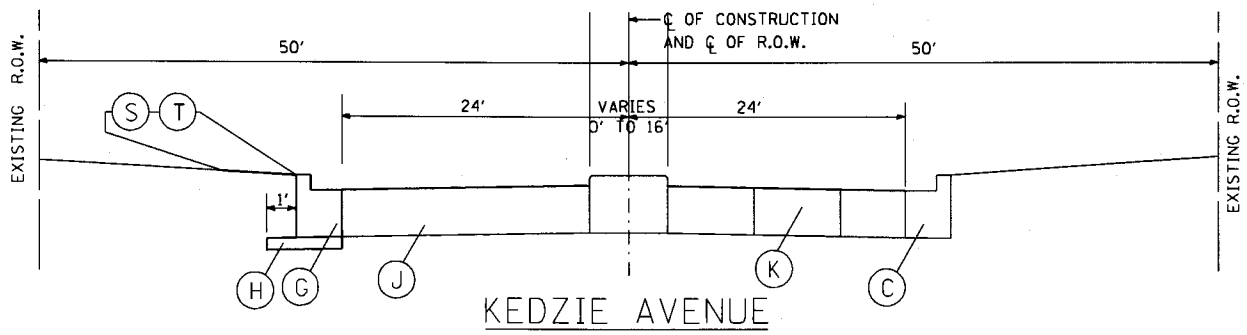

KEDZIE AVENUE

DIAMOND GRINDING AND CLASS B PATCHING WITH CURB AND GUTTER

LEGEND:

(A) EXISTING BASE COURSE

(B) EXISTING SHOULDER (TO BE MILLED AND RESURFACED)

(C) EXISTING CONCRETE CURB AND GUTTER

(D) EXISTING MEDIAN

(E) PROPOSED HOT-MIX ASPHALT BINDER COURSE, IL-19.0, N70 (2.25 IN.)

(F) PROPOSED POLYMERIZED LEVELING BINDER (MACHINE METHOD) IL-4.75, N70 (0.75 IN.)

(G) PROPOSED COMBINATION CONCRETE CURB AND GUTTER (WHERE REQUIRED)

(H) PROPOSED SUBBASE GRANULAR MATERIAL TYPE B (6 IN.) (WHERE REQUIRED)

(J) EXISTING PCC PAVEMENT

(K) CLASS B PATCHES (AT THE DIRECTION OF THE ENGINEER)

(S) SODDING (WHERE REQUIRED)

(T) FURNISHING AND PLACING TOPSOIL (4 IN.) (WHERE REQUIRED)

NOT TO SCALE

COUNTY OF COOK
DEPARTMENT OF TRANSPORTATION
AND HIGHWAYS

KEDZIE AVENUE
AT GOVERNORS HIGHWAY

COMPUTED: KLP
DRAWN: KLP
CHECKED: HPS

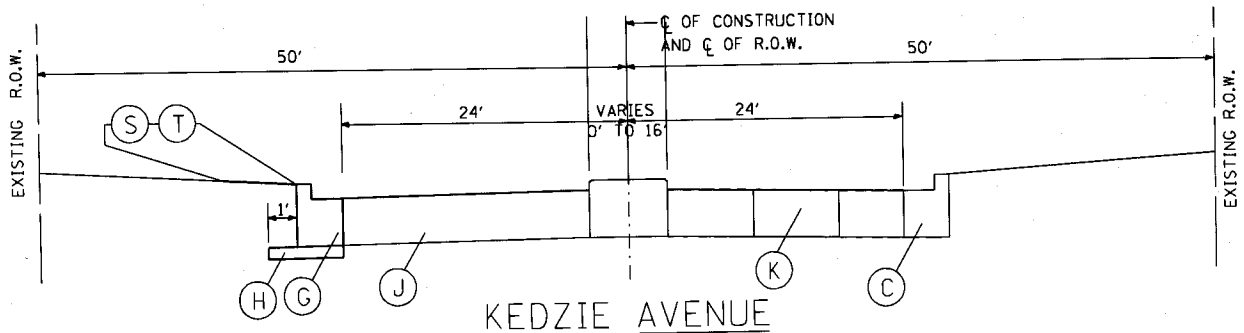

KEDZIE AVENUE

DIAMOND GRINDING AND CLASS B PATCHING WITH CURB AND GUTTER

LEGEND:

(A) EXISTING BASE COURSE

(B) EXISTING SHOULDER (TO BE MILLED AND RESURFACED)

(C) EXISTING CONCRETE CURB AND GUTTER

(D) EXISTING MEDIAN

(E) PROPOSED HOT-MIX ASPHALT BINDER COURSE, IL-19.0, N70 (2.25 IN.)

(F) PROPOSED POLYMERIZED LEVELING BINDER (MACHINE METHOD) IL-4.75, N70 (0.75 IN.)

(G) PROPOSED COMBINATION CONCRETE CURB AND GUTTER (WHERE REQUIRED)

(H) PROPOSED SUBBASE GRANULAR MATERIAL TYPE B (6 IN.) (WHERE REQUIRED)

(J) EXISTING PCC PAVEMENT

(K) CLASS B PATCHES (AT THE DIRECTION OF THE ENGINEER)

(S) SODDING (WHERE REQUIRED)

(T) FURNISHING AND PLACING TOPSOIL (4 IN.) (WHERE REQUIRED)

NOT TO SCALE

COUNTY OF COOK
DEPARTMENT OF TRANSPORTATION
AND HIGHWAYS

KEDZIE AVENUE
183RD STREET TO 175TH STREET

COMPUTED: KLP
DRAWN: KLP
CHECKED: HPS

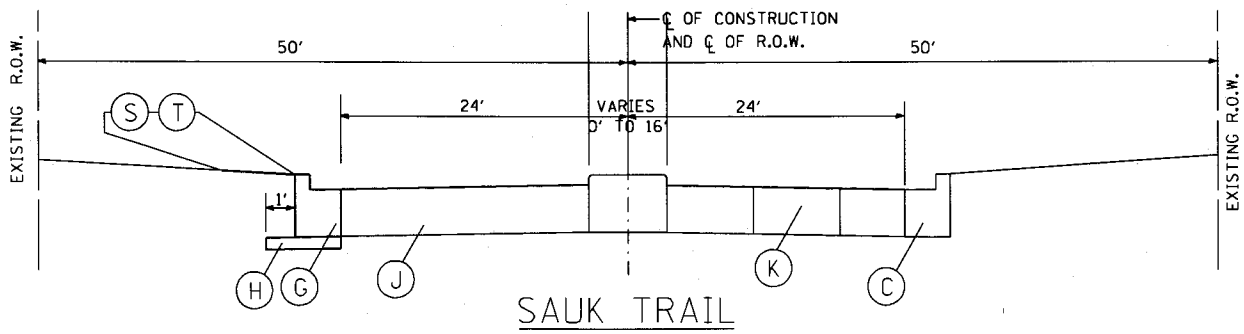

SAUK TRAIL

DIAMOND GRINDING AND CLASS B PATCHING WITH CURB AND GUTTER

LEGEND:

(A) EXISTING BASE COURSE

(B) EXISTING SHOULDER (TO BE MILLED AND RESURFACED)

(C) EXISTING CONCRETE CURB AND GUTTER

(D) EXISTING MEDIAN

(E) PROPOSED HOT-MIX ASPHALT BINDER COURSE, IL-19.0, N70 (2.25 IN.)

(F) PROPOSED POLYMERIZED LEVELING BINDER (MACHINE METHOD) IL-4.75, N70 (0.75 IN.)

(G) PROPOSED COMBINATION CONCRETE CURB AND GUTTER (WHERE REQUIRED)

(H) PROPOSED SUBBASE GRANULAR MATERIAL TYPE B (6 IN.) (WHERE REQUIRED)

(J) EXISTING PCC PAVEMENT

(K) CLASS B PATCHES (AT THE DIRECTION OF THE ENGINEER)

(S) SODDING (WHERE REQUIRED)

(T) FURNISHING AND PLACING TOPSOIL (4 IN.) (WHERE REQUIRED)

NOT TO SCALE

COUNTY OF COOK
DEPARTMENT OF TRANSPORTATION
AND HIGHWAYS

SAUK TRAIL
CICERO AVENUE TO GOVERNORS HIGHWAY

COMPUTED: KLP
DRAWN: KLP
CHECKED: HPS

COMBINED BILL OF MATERIALS

PAVEMENT PRESERVATION AND REHABILITATION PROGRAM (SOUTH) -

107TH STREET: 88TH AVENUE TO KEAN AVENUE
103RD STREET: 88TH AVENUE TO KEAN AVENUE
PLAINFIELD ROAD: WILLOW SPRINGS ROAD TO EAST AVENUE
KEDZIE AVENUE: VOLLMER ROAD TO FLOSSMOOR, AT GOVERNORS HIGHWAY
KEDZIE AVENUE: 183RD STREET TO 175TH STREET
SAUK TRAIL: CICERO AVENUE TO GOVERNORS HIGHWAY

107TH STREET: 88TH AVENUE TO KEAN AVENUE	103RD STREET: 88TH AVENUE TO KEAN AVENUE	PLAINFIELD ROAD: WILLOW SPRINGS ROAD TO EAST AVENUE	KEDZIE AVENUE: VOLLMER ROAD TO FLOSSMOOR ROAD, @ GOVERNORS HIGHWAY	KEDZIE AVENUE: 183RD STREET TO 175TH STREET	SAUK TRAIL: AT CICERO AVENUE TO GOVERNORS HIGHWAY	TOTAL	UNIT	PAY ITEM
0	1	5	1	3	4	14	EACH	MAINTENANCE OF EXISTING TRAFFIC SIGNAL INSTALLATION
0	140	1460	340	770	1470	4180	FOOT	DETECTOR LOOP, TYPE I
1	1	1	1	1	1	6	EACH	REBUILD EXISTING HANDHOLE
1	1	1	1	1	1	6	EACH	REBUILD EXISTING HEAVY DUTY HANDHOLE

ELECTRICAL GENERAL NOTES:

1. THE CONTRACTOR SHALL INFORM THE CCHD DESIGN ENGINEER AT (312) 603-1730 PRIOR TO THE START OF ANY WORK ON THE CONTRACT. A MINIMUM OF FIVE (5) WORKING DAYS ADVANCE NOTICE IS REQUIRED.
2. THE CONTRACTOR SHALL MARK THE LOCATIONS OF LOOPS AT (1) 103RD STREET AND 88TH AVENUE, (2) PLAINFIELD RD AND BRAINARD AVE, (3) KEDZIE AVE AT AND 183RD STREET, (4) KEDZIE AVE AND SOUTH SURBURBAN HOSPITAL ENTRANCE, (5) KEDZIE AVE AND 175TH STREET, (6) SAUK TRAIL AND LATONIA LN, (7) SAUK TRAIL AND KARLOV AVE AND CONTACT THE CCHD DESIGN ENGINEER AT (312)-603-1730. THIS LOCATION APPROVAL PRIOR TO THE CUTTING OF THE LOOPS.
3. THE CONTRACTOR SHALL MARK THE LOCATIONS OF LOOPS AT (1) PLAINFIELD RD AND WILLOW SPRING RD, (2) PLAINFIELD RD AND 55TH STREET, (3) PLAINFIELD RD AND LAGRANGE RD, (4) PLAINFIELD RO AND EAST AVE, (5) SAUK TRAIL AND CICERO AVE, (6) SAUK TRAIL AND GOVERNORS HIGHWAY, AND (7) KEDZIE AVE. AT GOVERNORS HIGHWAY. CONTACT IDOT ENGINEER AT (847) 705-4506. THIS IS FOR THE LOCATION APPROVAL PRIOR TO THE CUTTING OF THE LOOPS.
4. VEHICLE LOOP DETECTOR SHALL BE COMPATIBLE WITH THE CONTROL EQUIPMENT.
5. IT IS THE CONTRACTOR'S RESPONSIBILTY TO LOCATE CABLES AND CONDUITS AT THE EXISTING TRAFFIC SIGNAL INSTALLATIONS.
6. ALL ELECTRICAL CABLE SHALL HAVE POLYVINYL CHLORIDE JACKET.
7. THE CORNERS OF ALL NEW DETECTOR LOOPS SHALL BE CORE DRILLED INCLUDING PAVEMENT JOINTS AND CRACKS.
8. CARE IS TO BE TAKEN NOT TO DAMAGE ANY OF THE EXISTING TRAFFIC SIGNAL CONDUIT AND EQUIPMENT. IF ANY OF THE TRAFFIC SIGNAL CONDUIT AND/OR EQUIPMENT IS DAMAGED THE CONTRACTOR SHALL REPAIR OR REPLACE THE CONDUIT AND/OR EQUIPMENT AT NO COST TO THE COUNTY, IDOT, OR THE STATE.
9. THE COUNTY OR IDOT IS NOT PART OF JULIE FOR LOCATION OF TRAFFIC SIGNAL EQUIPMENT. CONTACT THE MECHANICAL, ELECTRICAL, ARCHITECTURE AND LANDSCAPING DIVISION AT (312) 603-1730. OR IDOT AT (847) 705-4406. VEHICLE LOOP DETECTOR SHALL BE COMPATIBLE WITH THE CONTROL EQUIPMENT.
10. FOR THE LOCATION OF UNDERGROUND COUNTY MAINTAINED FACILITIES, SEE COUNTY SPECIAL PROVISION "TRAFFIC SIGNAL WORK GENERAL".
11. THE USE OF PAY ITEMS "REBUILD EXISTING HANDHOLE" AND REBUILD EXISTING "HEAVY DUTY HANDHOLE" WILL BE AT THE DIRECTION OF ENGINEER.

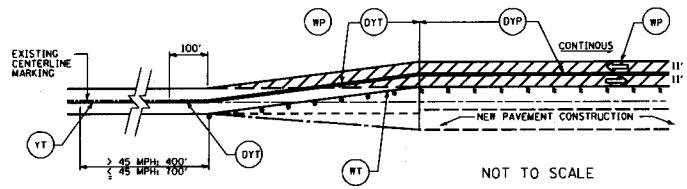

1 FIRST STAGE

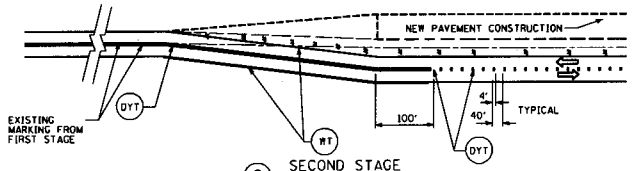

2 SECOND STAGE

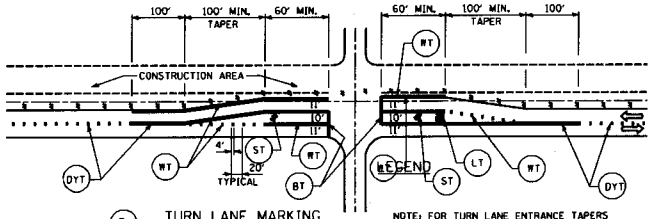

3 TURN LANE MARKING SECOND STAGE

NOTE: FOR TURN LANE ENTRANCE TAPERS LONGER THAN 175' SEE DETAIL 8

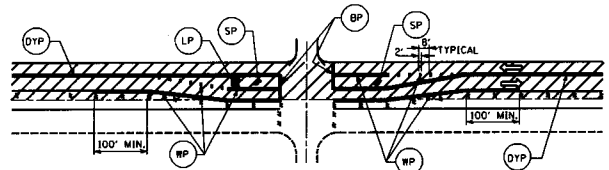

4 TURN LANE MARKING FIRST STAGE

STORAGE AND TAPER LENGTHS SIMILAR TO DETAIL 3

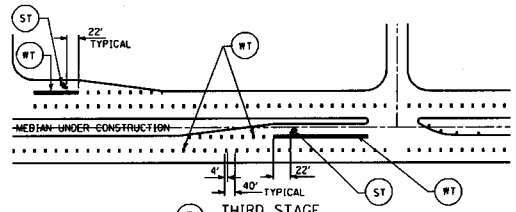

5 THIRD STAGE

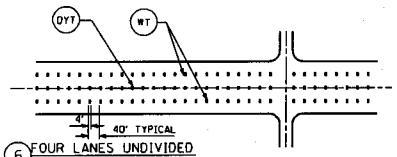

6 FOUR LANES UNDIVIDED

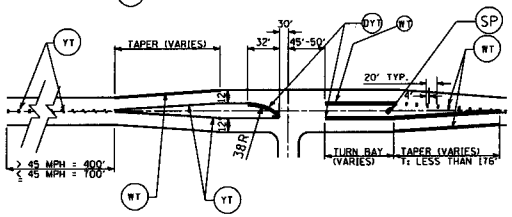

7 THREE LANE T INTERSECTION

TEMPORARY PAVEMENT

FINAL PAVEMENT

BP STOP BAR: 12" WIDE (MIN.) WHITE, WHERE REQUIRED

BT STOP BAR: 3 - 4" WHITE TAPE LINES, WHERE REQUIRED

YT YELLOW TAPE LINE - 4"

WT WHITE TAPE LINE - 4"

DYT DOUBLE YELLOW TAPE LINES- 2 @ 4", SPACED 11" MIN. C. TO C.

ST ARROW SYMBOL(S) FORMED WITH 4" WHITE TAPE LINE

LT LETTERS = "ONLY" FORMED WITH 4" WHITE TAPE LINE

RT RAILROAD CROSSING LETTERS AND SYMBOL FORMED WITH 4" WHITE TAPE

YP YELLOW PAINTED 4" LINE

WP WHITE PAINTED 4" LINE

DYP DOUBLE YELLOW PAINTED 4" LINES. 2 @ 4" WIDE SPACED 11" C. TO C.

SP ARROW SYMBOL(S) PAINTED WHITE

LP LETTERS = "ONLY" PAINTED WHITE

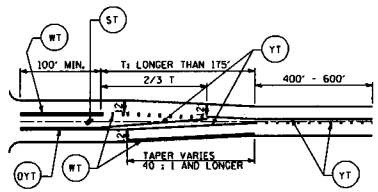

8 THREE LANE APPROACH

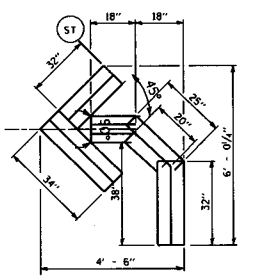

25 LIN. FT. OF 4" WHITE LINE

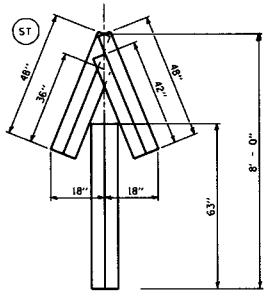

25 LIN. FT. OF 4" WHITE LINE

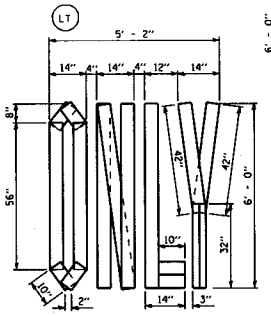

48 LIN. FT. OF 4" WHITE LINE

TEMPORARY LETTERS AND SYMBOLS FORMED WITH 4 INCH WIDE PAVEMENT MARKING TAPE

FOR PAINTED LETTERS AND SYMBOLS, SEE NOTE 4

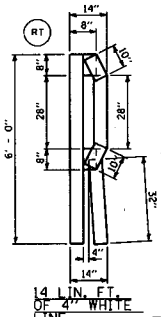

14 LIN. FT. OF 4" WHITE LINE

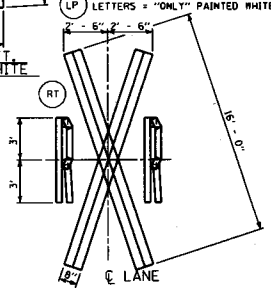

"X" = 64 LIN. FT. OF 4" WHITE LINE

NOTES:

1. TEMPORARY MARKING FOR LANE CLOSURES AND BY-PASSES SHALL BE IN ACCORDANCE WITH TRAFFIC CONTROL STANDARD 701331, 701401, 701426, 701431 OR 701416, WHICHEVER IS APPLICABLE, AND WITH DETAILS 1 THRU 4 ON THIS SHEET.
2. THE PAVEMENT MARKING WORD "ONLY", FOR TEMPORARY APPLICATIONS, SHALL ONLY BE REQUIRED WITH THE TURN ARROW IN A LANE WHERE THE MANDATORY MOVEMENT IS NOT READILY APPARENT DUE TO THE ALIGNMENT AND WHERE DIRECTED BY THE ENGINEER. SEE DETAILS 3 AND 4.
3. WHITE EDGELINES (4" WHITE TAPE OR PAINT AS APPROPRIATE) SHALL BE CONTINOUS IF REQUIRED IN THE JUDGEMENT OF THE ENGINEER.
4. TEMPORARY PAINTED ARROW SYMBOLS, WORDS AND ADVANCE RAILROAD CROSSING MARKINGS SHALL CONFORM WITH THE STANDARD DESIGN AS SHOWN IN THE MANUAL ON UNIFORM TRAFFIC CONTROL DEVICES. 6' LETTERS AND TURN ARROWS MAY BE USED WHERE SPEEDS THRU THE MARKED AREA DO NOT EXCEED 40 M. P. H.. QUANTITIES FOR THE PAINTED MARKINGS MAY BE DETERMINED FROM TABLE 500-1 IN SECTION 780 OF THE STANDARD SPECIFICATIONS.
5. REFER TO THE SIGNING AND FINAL MARKING PLANS FOR LOCATING TEMPORARY MARKINGS, RAILROAD APPROACHES, STOP LINES, CROSSWALKS, ETC.
6. REFER TO THE SPECIAL PROVISION FOR TRAFFIC PROTECTION.
7. WHERE THE ITEM: PAVEMENT MARKING TAPE, TYPE III - LETTERS AND SYMBOLS IS INCLUDED IN THE CONTRACT, THE DESIGN OF THE LETTERS AND ARROW SYMBOLS AND THE SQUARE FEET QUANTITIES FOR THIS ITEM SHALL BE THE SAME AS FOR PAINTED MARKINGS DESCRIBED IN NOTE 4.

TYPICAL TEMPORARY PAVEMENT MARKING APPLICATIONS DURING NORMAL CONSTRUCTION OR MAINTENANCE ACTIVITIES AND TRAFFIC GUIDANCE PRIOR TO PERMANENT PAVEMENT MARKING OPERATIONS.
THIS REFERENCE STANDARD IS NOT INTENDED AS A SUBSTITUTE FOR A SPECIFIC MAINTENANCE OF TRAFFIC PLAN FOR THIS PROJECT.
SEE THE CONSTRUCTION STAGING PLANS, TRAFFIC STANDARDS AND/OR PLAN GENERAL NOTES.

REVISED 7-23-04 F.H.

VARIOUS LOCATIONS	COUNTY HIGHWAY: VARIOUS	COUNTY OF COOK DEPARTMENT OF TRANSPORTATION AND HIGHWAYS	COMPUTED: A.L.B. DRAWN: A.L.B. CHECKED: H.P.S.	REVISIONS: REVISED BORDER	DATE: 01-28-14	PROJECT NAME: CIVIL DIVISION TEMPORARY PAVEMENT MARKING DETAIL (ENGLISH) STANDARDS T-1	PM-1
	FISCAL YEAR: 2015						NOT TO SCALE SHEET
	SECTION: 14-PPRPS.01-PV						

NOT TO SCALE

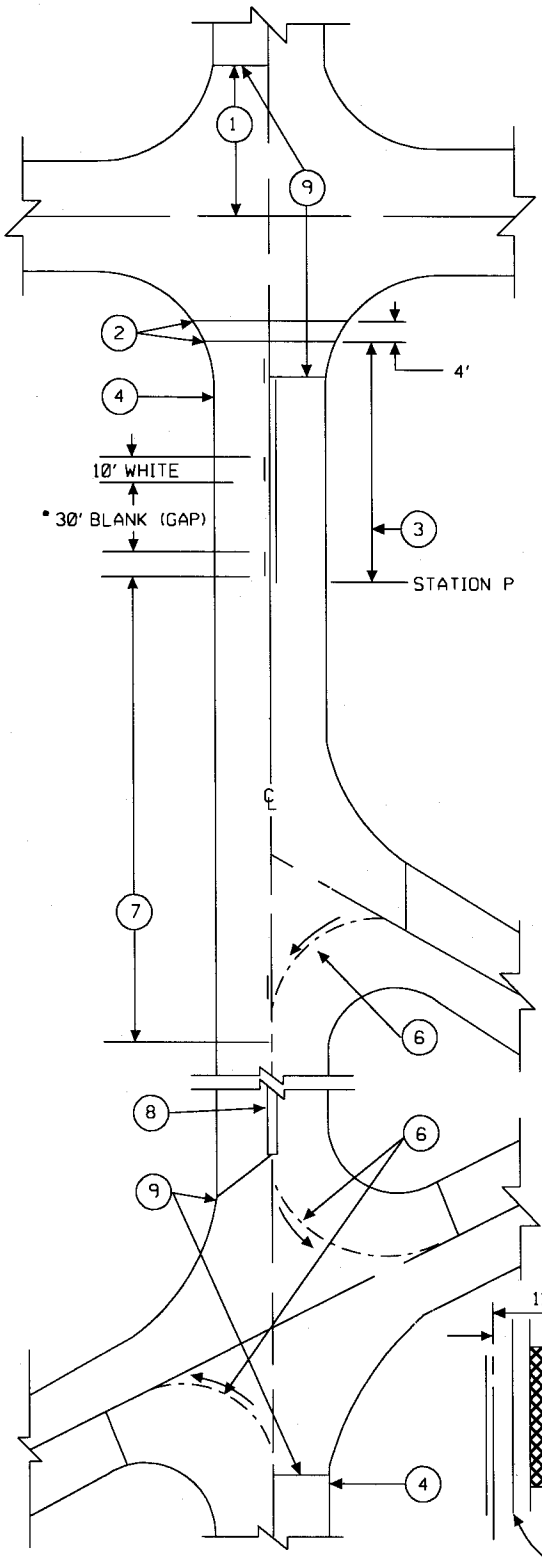

TYPICAL NO PASSING ZONE MARKING:

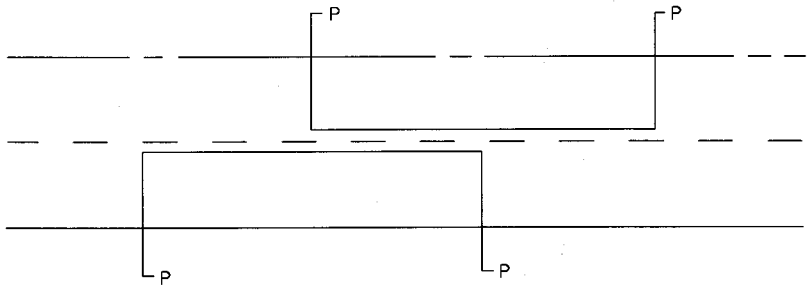

P= DISTANCE STATION ON PLANS OR LOCATED BY THE ENGINEER.

1 & 6	CROSS ROAD WIDTH	26'	26'- 48'	48'
	LENGTH OR RADIUS	35'	45'	50'

(2) CROSSWALK: WHERE SHOWN ON THE PLANS OR DESIGNATED BY THE ENGINEER. SEE TMD-107

(3) 4" YELLOW NO PASSING LINE:STOP LINE APPROACH:AS SHOWN ON THE PLANS OR TABLE:

POSTED SPEED	35	40	45	50	55
LENGTH OF LINE	220'	315'	420'	535'	660'

(4) 4" WHITE EDGELINE, 2" CLEAR FROM EDGE OF PAVEMENT.

(5) EDGELINING AROUND THE STREET RETURNS SHALL BE ONLY BE DONE WHERE DESIGNATED BY THE ENGINEER.

(7) OMIT THE CENTER LINE MARKING ONLY WITHIN THE INTERSECTION OF A DEDICATED STREET, ROAD OR SIGNALIZED ENTRANCE OR DRIVE. THE LENGTH OF THE OMISSION SHOULD NOT BE LESS THAN 70'.

(8) DOUBLE 4" YELLOW CENTER LINE (WHERE SHOWN ON THE PLANS)SPACED 11" O.C..

(9) 24" WHITE STOP LINE (WHERE REQUIRED).

NOTE: WHERE POSTED SPEED LIMIT IS 40 MPH OR MORE AND THE DISTANCE BETWEEN TWO SUCCESSIVE NO-PASSING LINES IS LESS THAN 600' THE LINES SHALL BE CONNECTED.

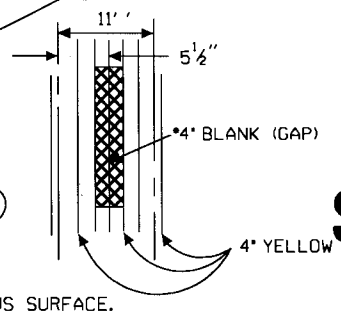

STANDARD T–4

• BLACK SHALL BE OMITTED ON NEW BITUMINUS SURFACE.

TYPICAL MARKING
2 LANE ROADS
TMD-101-5

NOT TO SCALE

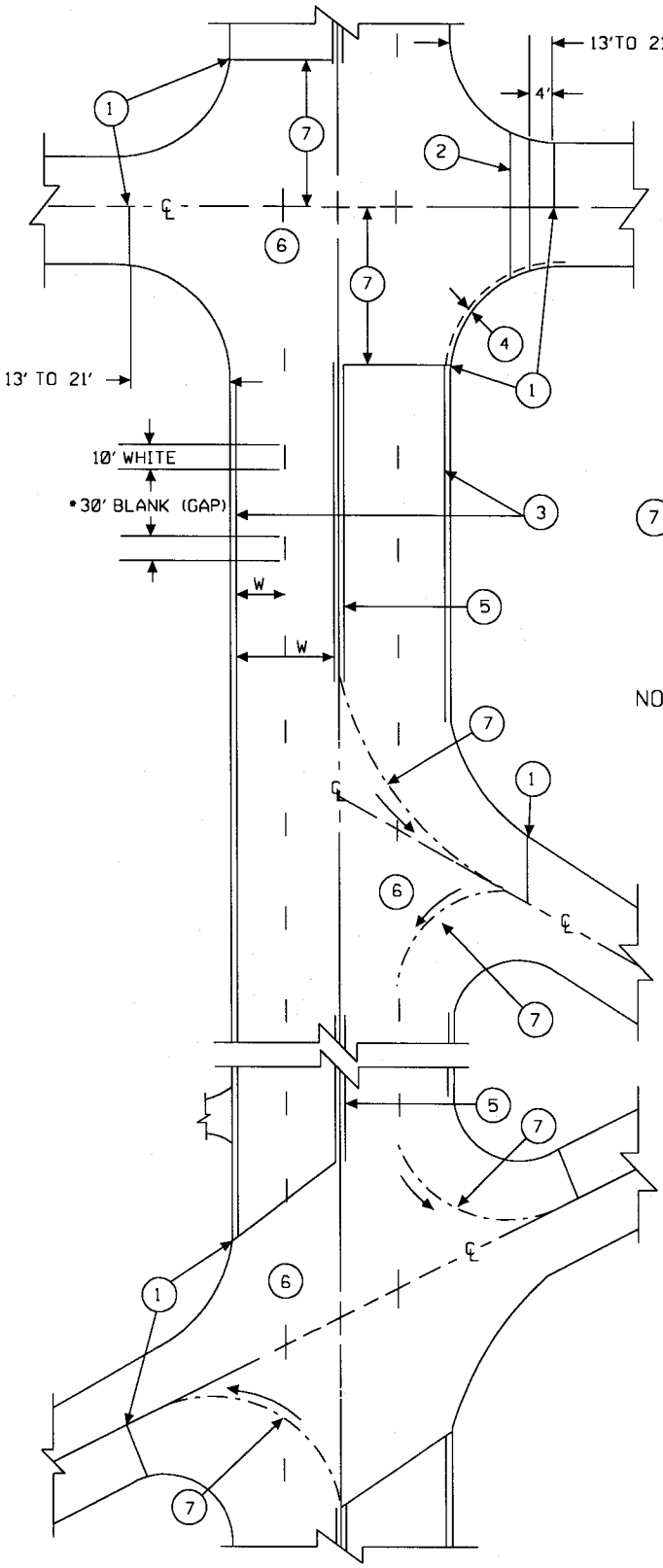

1. 12" WHITE STOPLINE .
2. CROSSWALK: WHERE SHOWN ON THE PLANS OR DESIGNATED BY THE ENGINEER. SEE TMO-107
3. 4" EDGELINE :2" CLEAR FROM EDGE OF PAVEMENT .
4. EDGELINING AROUND STREET RETURNS SHALL BE DONE WHERE DESIGNATED BY THE ENGINEER.
5. DOUBLE 4" YELLOW CENTER LINE(WHERE SHOWN ON THE PLANS)SPACED 11" O.C.AND WHEN SPECIFIED A 4" BLACK LINE CENTERED BETWEEN.•
6. OMIT THE CENTER LINE MARKING ONLY WITHIN THE INTERSECTION OF A DEDICATED STREET, ROAD OR SIGNALIZED ENTRANCE OR DRIVE. THE LENGTH OF THE OMISSION SHOULD NOT BE LESS THAN 70'.
7.

CROSS ROAD WIDTH	26'	26'- 48'	48'
LENGTH OR RADIUS	35'	45'	50'

PLACE STOP LINE (WHERE APPLICABLE) AND BEGIN CENTERLINE OMISSION AT THE TANGENT POINT OF THE RETURNING RADIUS AS SHOWN.

NOTE: ANY VARIATIONS FROM THIS STANDARD SHALL BE AS SHOWN ON THE PLANS OR DIRECTED BY THE ENGINEER.

•BLACK SHALL BE OMITTED ON NEW BITUMINUS SURFACE.

STANDARD T–5

TYPICAL MARKING
4-LANE UNDIVIDED ROADS
TMD-102-5

NOT TO SCALE

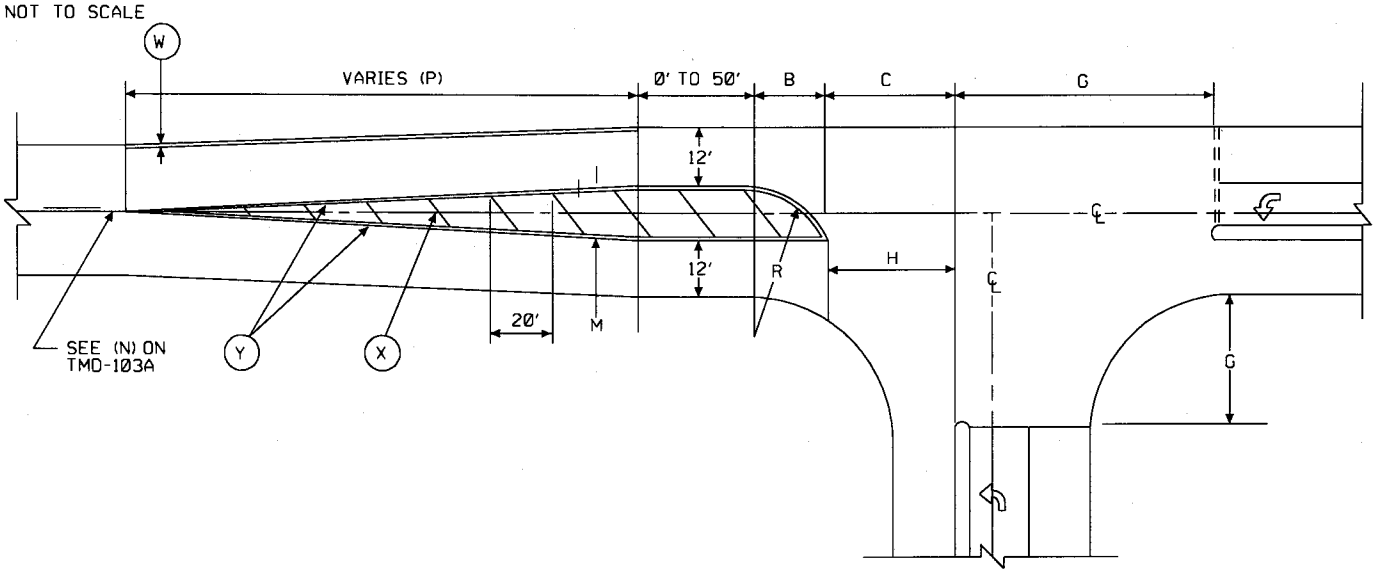

TYPE OF TURNING TRAFFIC ↓	B		C	G*	H*	R
	M=12'	M=16'				
NORMAL BALANCE	32'	36'	30'	45'	32'	50'
HIGH % OF SEMI-TRAILER TRUCKS	58'	67'	32'	50'	35'	150'

(1) SYMMETRICAL WIDENING

(2) RIGHT SIDE WIDENING ONLY

(3) LEFT SIDE WIDENING ONLY

(4) T-INTERSECTION WIDENING

(5) CENTER LANE TWO WAY LEFT TURN (SEE TMD-103D)

(V) 6" WHITE LINE, 2' LONG; 6" GAP (BLANK)/WHITE LINE (SEE TMD-105).

(W) 8" WHITE LINE ALONG REDUCTION TAPER (SEE TMD-112).

(X) 12" YELLOW DIAGONAL LINES: 45° ON 20' CENTERS (SEE TMD-103A).

(Y) DOUBLE 4" YELLOW LINES ON 11' CENTERS WITH NO BETWEEN.

(Z) STANDARD WHITE LETTERS AND SYMBOLS (SEE TMD-105-A & TMD-106-5).

NOTE: 4" WHITE EDGELINE SHALL BE APPLIED IN ALL CASES EXCEPT ALONG REDUCTION TAPERS WHERE 8" WHITE IS APPLIED AND WHERE DIRECTED OTHER WISE BY THE ENGINEER.

STANDARD T-6

TYPICAL MARKING
3 LANE INTERSECTION APPROACH
TMD-103C

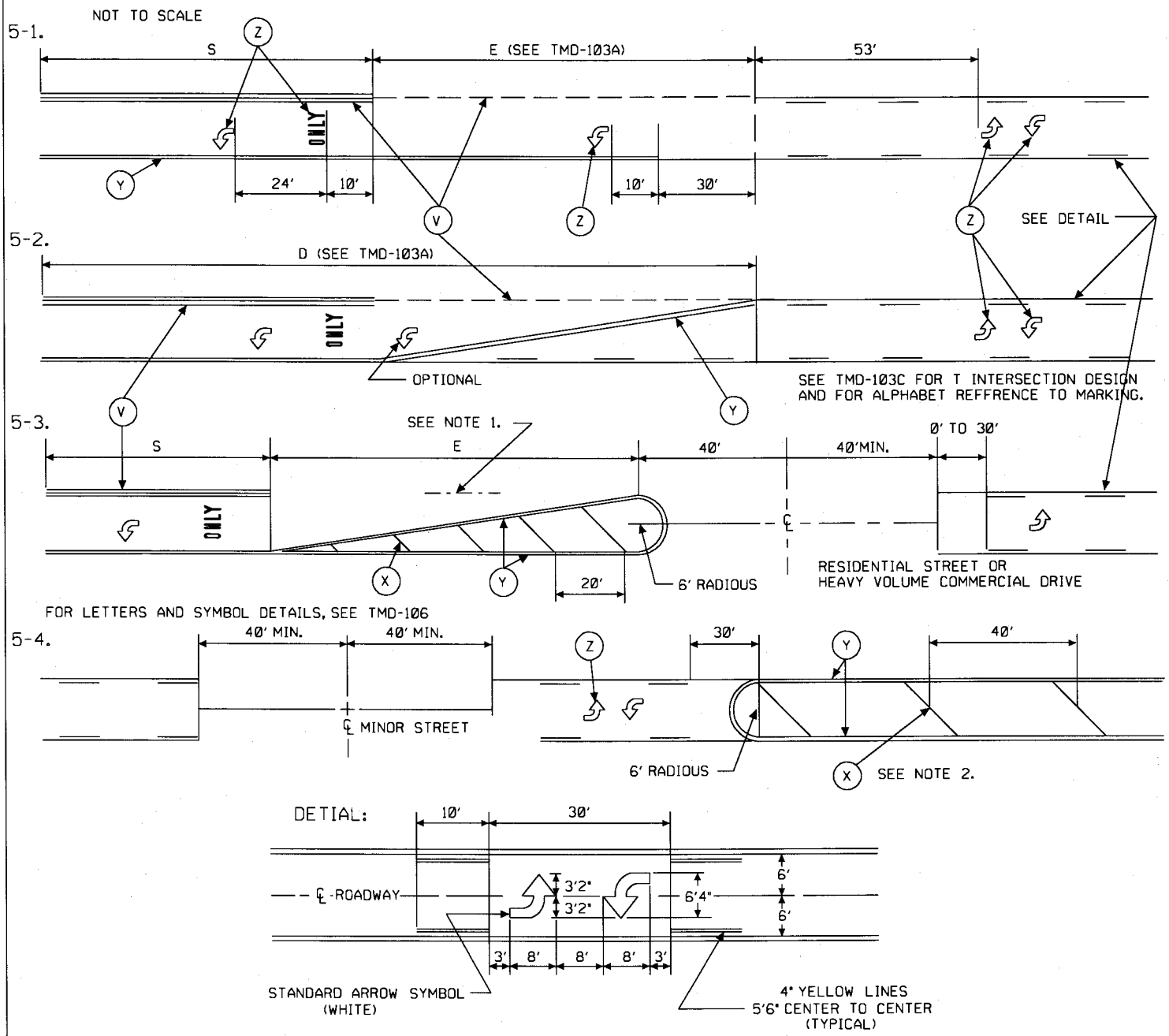

NOTE:

1. EXCEPT ON CURVES, THE DASHED LANE ENTRANCE LINE SHALL BE OMITTED WHERE E IS 100 FEET OR LESS.

2. THRU ANY SECTION OF A 3- OR 5-LANE WIDTH ROADWAY WHERE NO LEFT TURNS ARE REQUIRED WITHIN A DISTANCE OF AT 600 FEET THE CENTER LANE SHOULD BE MARKED AS A MEDIAN. THE 12-INCH DIAGONALS SHALL NORMALLY BE SPACED ON 20-FOOT CENTERS. WHERE THE LENGTH OF THE FULL WIDTH MEDIAN IS LONGER 330 FEET THE DIAGONAL SHALL BE SPACED ON 40-FOOT CENTERS AS SHOWN.

3. THE DESIGNS SHOWN ARE TYPICAL EXAMPLES OF CENTER LANE MARKING; A DETAILED PLAN SHOULD BE PROVIDED FOR SPECIFIC LOCATIONS.

STANDARD T–7

TYPICAL TWO-WAY
TWO-WAY TURN CENTER LANE MARKING
TMD-103D-2

NOT TO SCALE

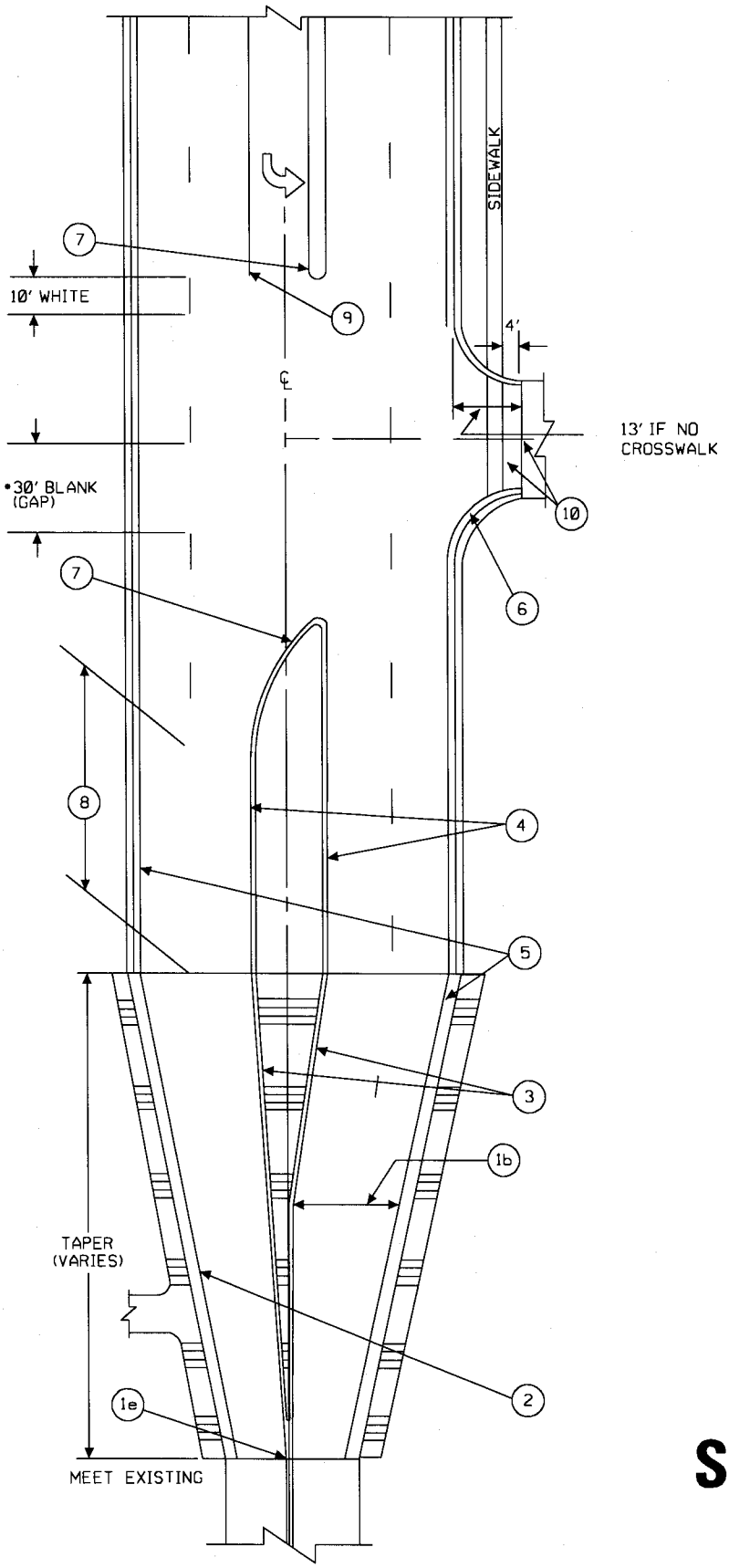

(1b) CENTERLINE TAPER BEGINS WHERE PAVEMENT REACHES TWO LANES WIDE.

(1e) REDUCTION TAPERS END AT EXISTING SINGLE LANE WIDTH.

(2) 8" WIDE WHITE EDGELINE ALONG REDUCTION SIDE OF TAPER. SEE TMD-112.

(3) DOUBLE 4" YELLOW LINES SPACED 11" ON CENTER WITH 4" BLACK LINE CENTERED BETWEEN. •ON EACH SIDE APPROACHING THE MEDIAN THE INSIDE YELLOW LINE (AND BLACK LINE)• SHALL END 2" CLEAR OF THE MEDIAN.

(4) MEDIAN EDGELINE AT 2" CLEAR FRON EDGE OF THE PAVEMENT.

(5) 4" WHITE CONTINUOUS EDGELINE, 2" CLEAR FROM THE EDGE OF PAVEMENT.

(6) EDGELINING AROUND STREET RETURNS SHALL ONLY BE DONE WHERE DESIGNATED BY THE ENGINEER.

(7) FOR DETAILS OF MEDIAN NOSE MARKING SEE TMD-109 OR 110.

(8) IN ADVANCE OF A DROP LANE TRANSITION OMIT THE LAST 3 DASHES OF THE LANE LINE APPROACH WHERE THE POSTED SPEED LIMIT IS 40 OR LESS. OMIT THE LAST 5 DASHES WHERE THE SPEED LIMIT IS 45 OR HIGHER.

(9) AT T INTERSECTIONS WITH NO STOP LINE PRESENT, THE 6" WHITE TURN LANE LINE SHALL BE EXTENDED UP TO 20' BEYOND THE MEDIAN NOSE. IN ALL OTHER CASES, THIS LINE SHALL END IN LINE WITH THE MEDIAN NOSE. SEE TMD-105.

(10) CROSSWALKS AND / OR STOP LINES ON SIDE ROADS AS SHOWN SHALL ONLY BE APPLIED WHERE REQUIRED ON NEW SURFACES AND/OR WHERE DESIGNATED BY THE ENGINEER.
FOR TYPICAL STOP LINE LOCATION ON THE MAIN ROADWAY SEE TMD-102.

•BLACK LINES SHALL BE OMITTED ON NEW BITUMINOUS SURFACES.

STANDARD T–8

TYPICAL MARKING:
MULTILANE DIVIDED ROADS
TMD-104-5

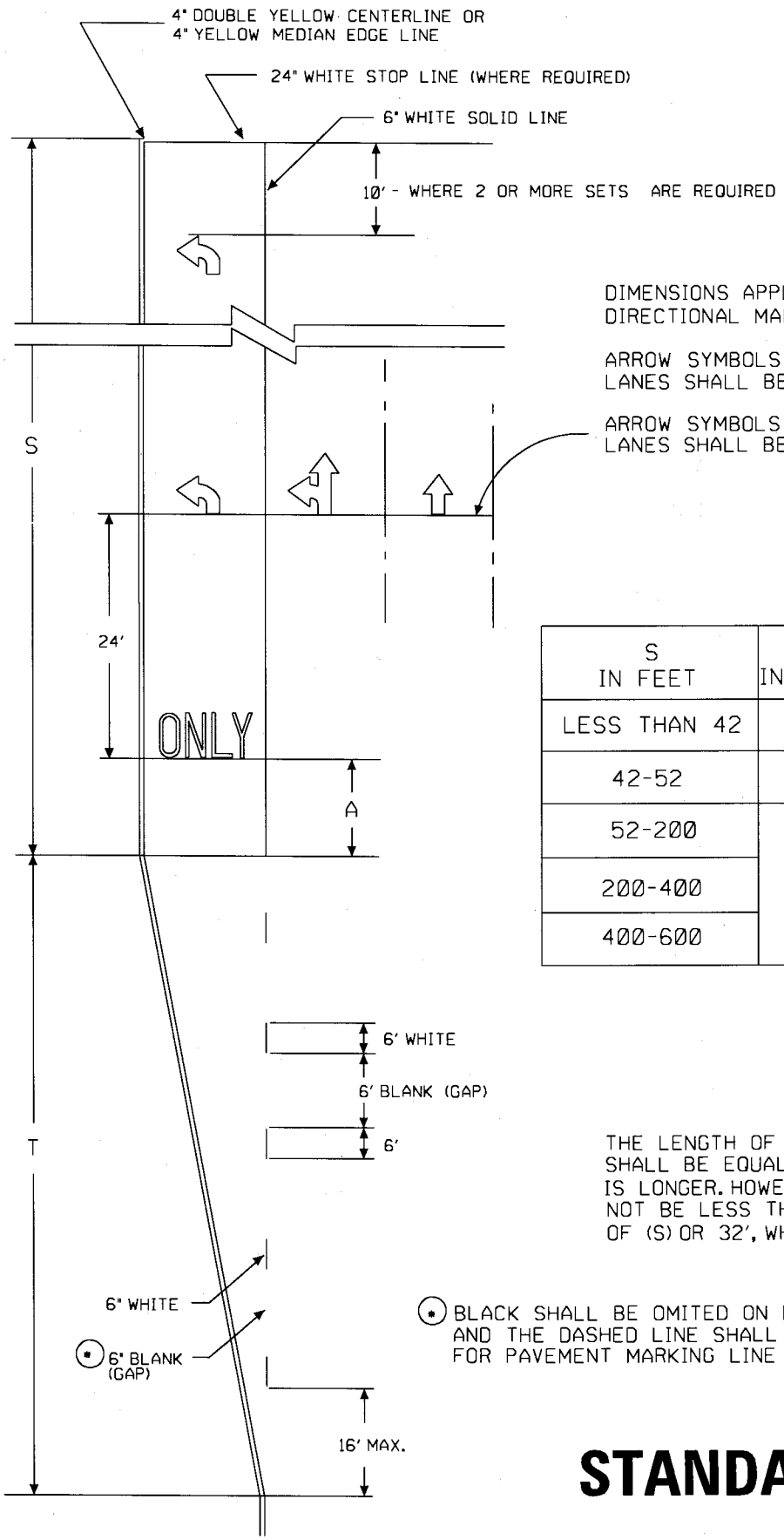

DIMENSIONS APPLY TO ALL LANES REQUIRING DIRECTIONAL MARKING.

ARROW SYMBOLS WHERE REQUIRED IN ADJACENT LANES SHALL BE IN LINE.

ARROW SYMBOLS WHERE REQUIRED IN ADJACENT LANES SHALL BE IN LINE.

S IN FEET	A IN FEET	NO SETS REQUIRED (ONLY)
LESS THAN 42	0	1
42-52	5	
52-200	10	
200-400		2
400-600		3*

*SPACED AT EQUAL INTERVALS

THE LENGTH OF THE BLACK / WHITE LINE SHALL BE EQUAL TO (T) OR 128'; WHICHEVER IS LONGER. HOWEVER, THE SOLID LINE SHALL NOT BE LESS THAN TWO THIRDS THE LENGTH OF (S) OR 32', WHICHEVER IS LONGER.

(*) BLACK SHALL BE OMITED ON NEW PAVEMENT SURFACES, AND THE DASHED LINE SHALL BE INCLUDED IN THE COST FOR PAVEMENT MARKING LINE - 6" WHITE.

STANDARD T-9

DIRECTIONAL LANE MARKING LAYOUT
TMD- 105-4

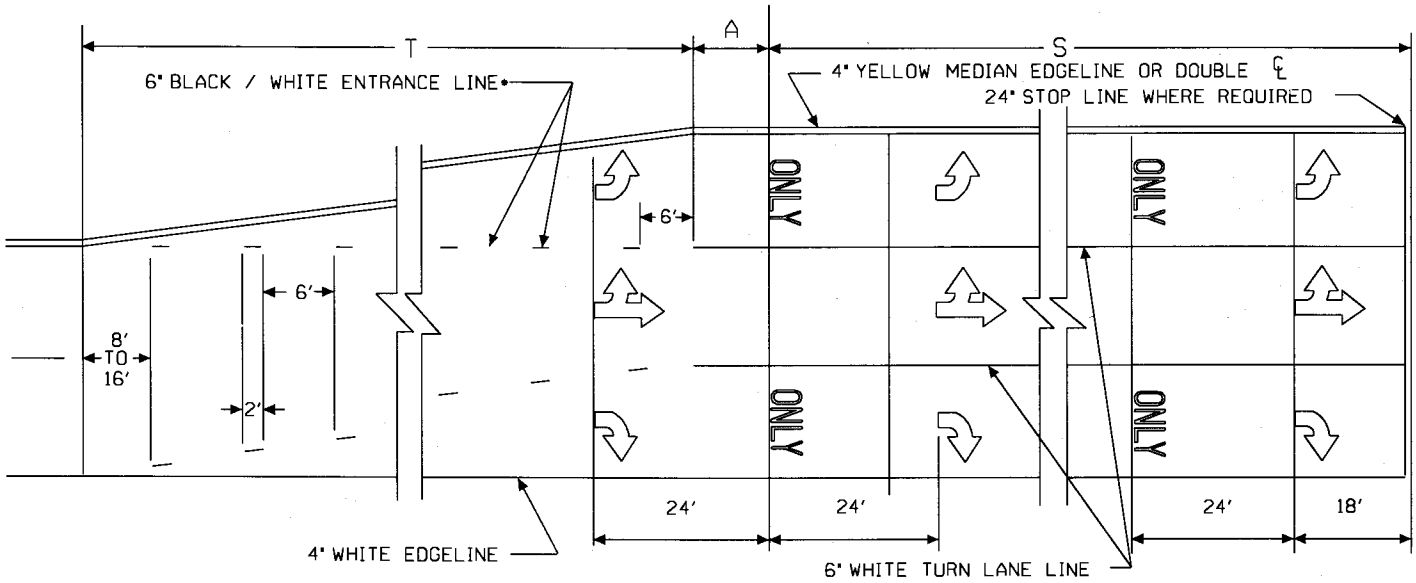

SEE TMD-105A-5 FOR LETTERS AND SYMBOL DETAILS

S IN FEET	LESS THAN 42	42-52	52-200	200-400	400-600
A IN FEET	0	5	10	10	10
SETS REQ'D EACH LANE	↑ ONLY ↑			↑ ONLY ↑ ONLY ↑	↑ ONLY ↑ ONLY ↑ ONLY ↑

UNLESS OTHERWISE DIRECTED, WHITE ENTRANCE LINES• SHALL BE APPLIED ON ALL COOK COUNTY ROADS EXCEPT APPROACHES TO (T) INTERSECTIONS.

THE LENGTH OF THE WHITE LINE SHALL BE EQUAL TO (T) OR 128'; WHICHEVER IS LONGER. HOWEVER, THE SOLID TURN LANE LINE SHALL THE LENGTH OF (S) OR 32', WHICHEVER IS LONGER.

(•) BLACK SHALL BE OMITED ON NEW BITUMINOUS SURFACES, AND THE DASHED LINE SHALL BE INCLUDED IN THE COST FOR PAVEMENT MARKING LINE - 6" WHITE.

STANDARD T-9A

ALTERNATE DESIGN:
DIRECTIONAL LANE MARKING LAYOUT
TMD-105-A

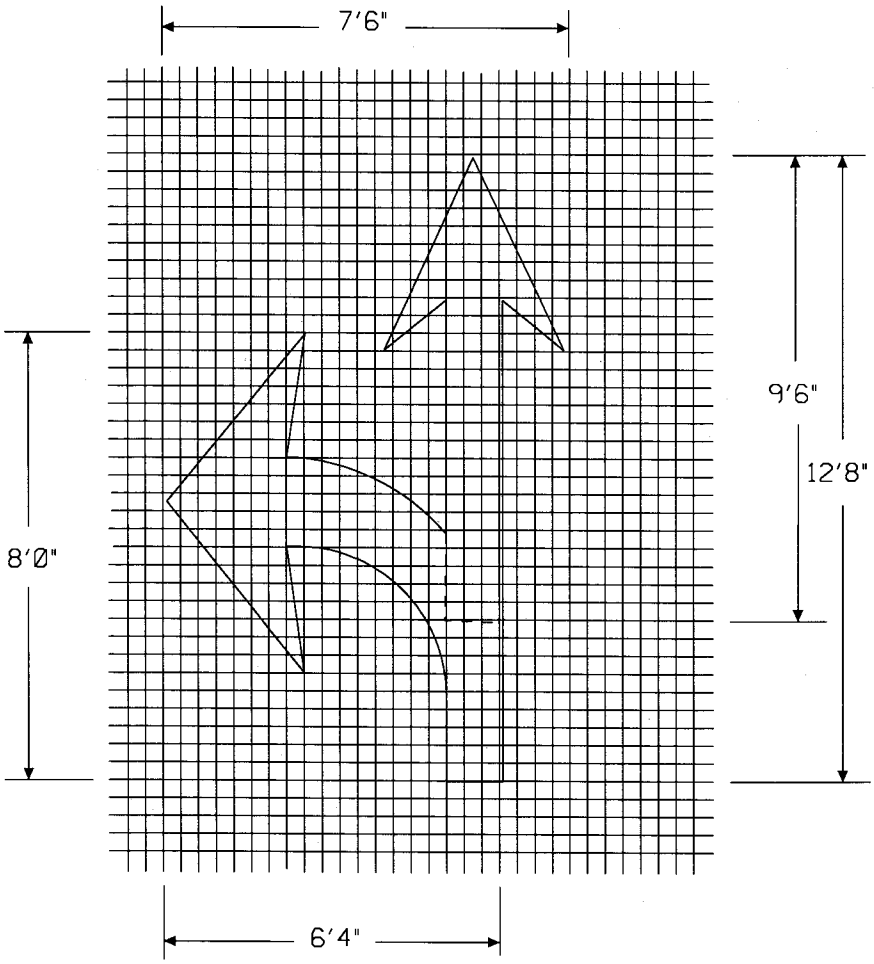

GRID SCALE:

EACH SQUARE = 4 INCHES ON A SIDE.

ALL LETTERS AND SYMBOLS: WHITE

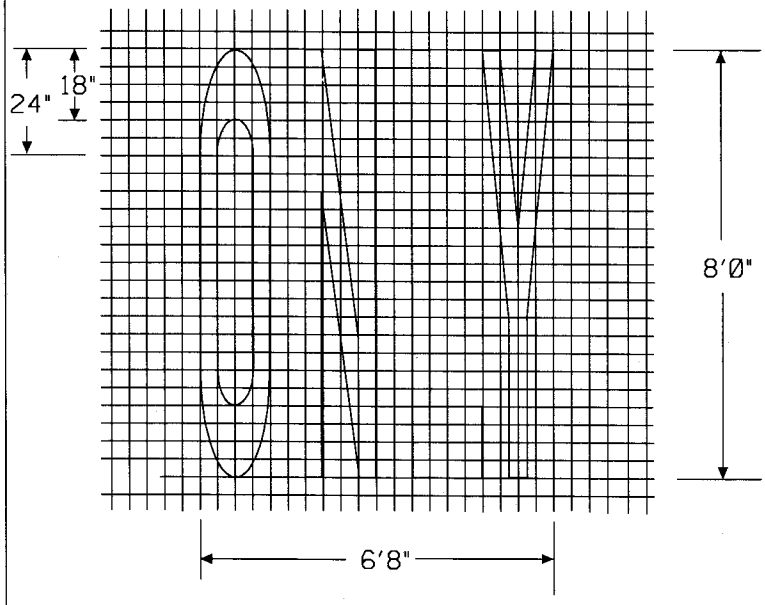

	SQ.FT.
OR	15.6
	11.7
OR	26.0
	27.2
ONLY	22.6

FOR PLACEMENT SEE TMD-105

STANDARD T–10

DIRECTIONAL LANE MARKING DETAILS

TMD-106-5

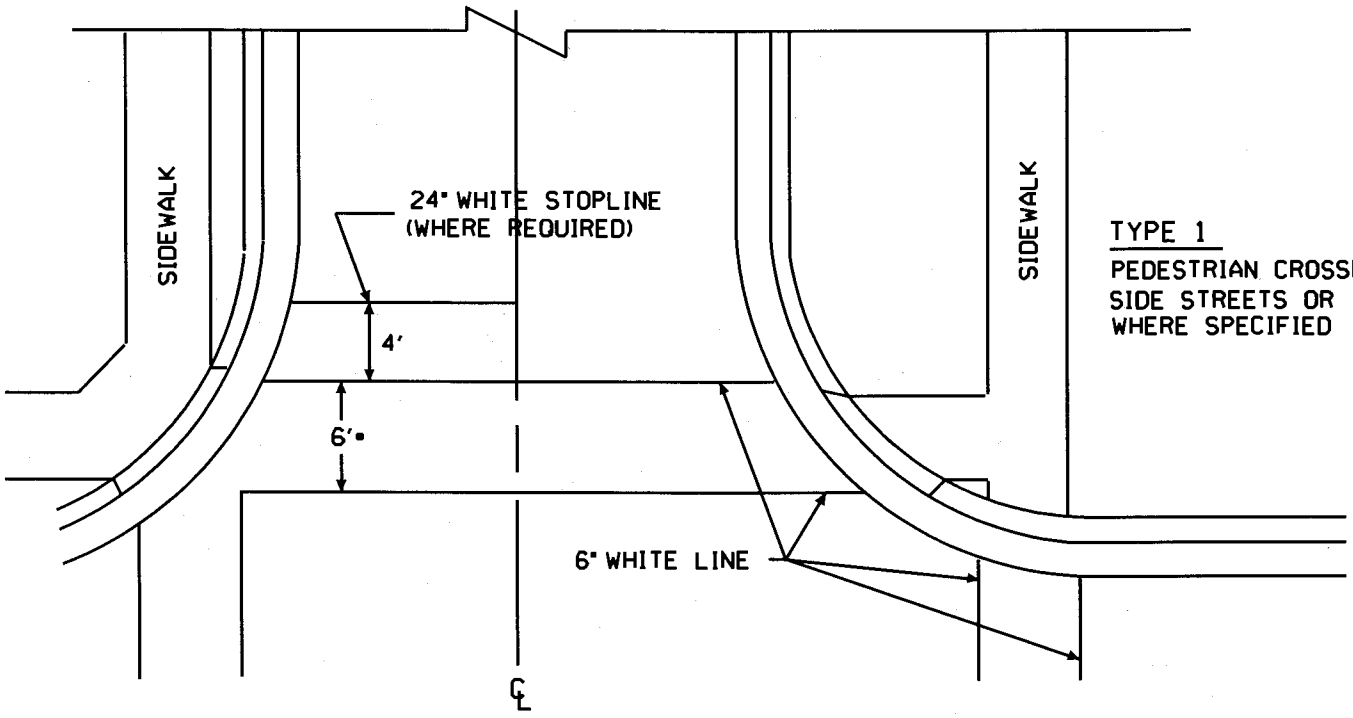

•THIS DIMENSION SHOULD BE INCREASED WHERE SIDEWALK WIDTHS WARRENT.

STANDARD T–11

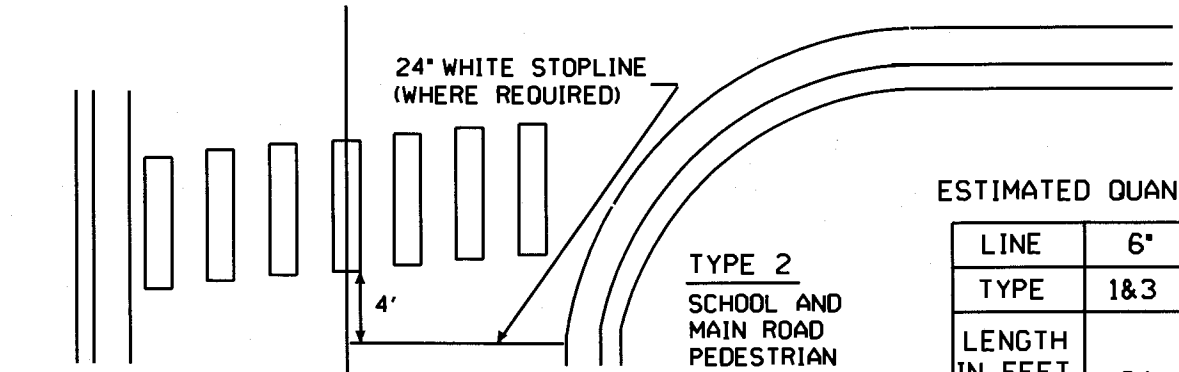

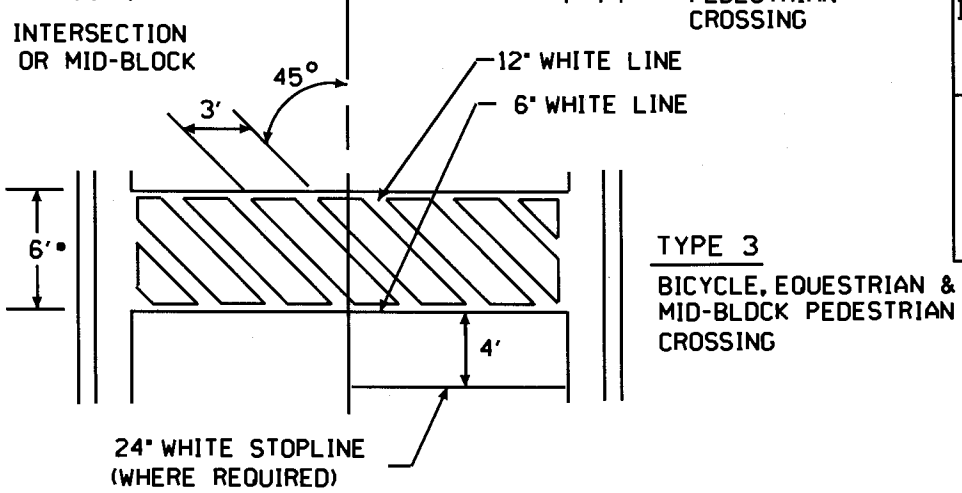

ESTIMATED QUANTITIES:

LINE	6"	12"
TYPE	1&3	2&3
LENGTH IN FEET PER 12' LANE	24	24
ADDED LIN.FT. PER CORNER	10	6

NOT TO SCALE:

TYPICAL MARKING
CROSSWALKS
TMD-107-2

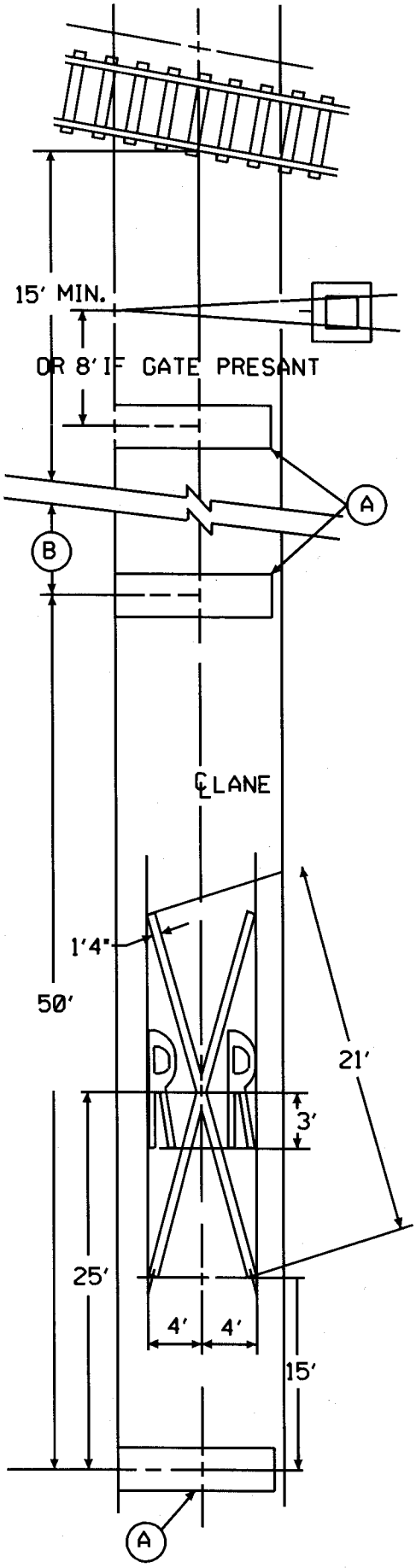

GRID SCALE:
THE SIDE OF EACH SQUARE = 3"

ALL MARKING SHALL BE WHITE.

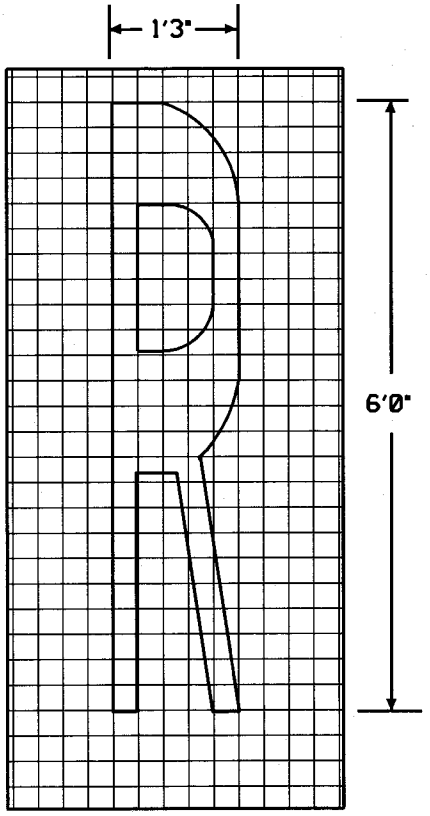

2'0"x WIDTH OF THE LANE (S) PAID FOR AS ...LINE - 24". THE BANDS SHALL EXTEND ACROSS ALL APROACH LANES WITH SEPARATE "RXR" SYMBOLS IN EACH LANE.

POSTED SPEED(MPH)	35	40	45	50	55
DISIRED	200	300	400	500	600
MINIMUM	50	150	300	400	600

OR AS LOCATED ON THE PLANS OR AS DERECTED BY THE ENGINEER.

EACH "R"= 3.6 SQ.FT. "X"= 54 SQ.FT.

PAID FOR AS LETTERS AND SYMBOLS, 61.2 SQ.FT. PER EACH APPROACH LANE.

STANDARD T-12

NOT TO SCALE:

APPROACH MARKING
RAILROAD GRADE CROSSING
TMD-108-3

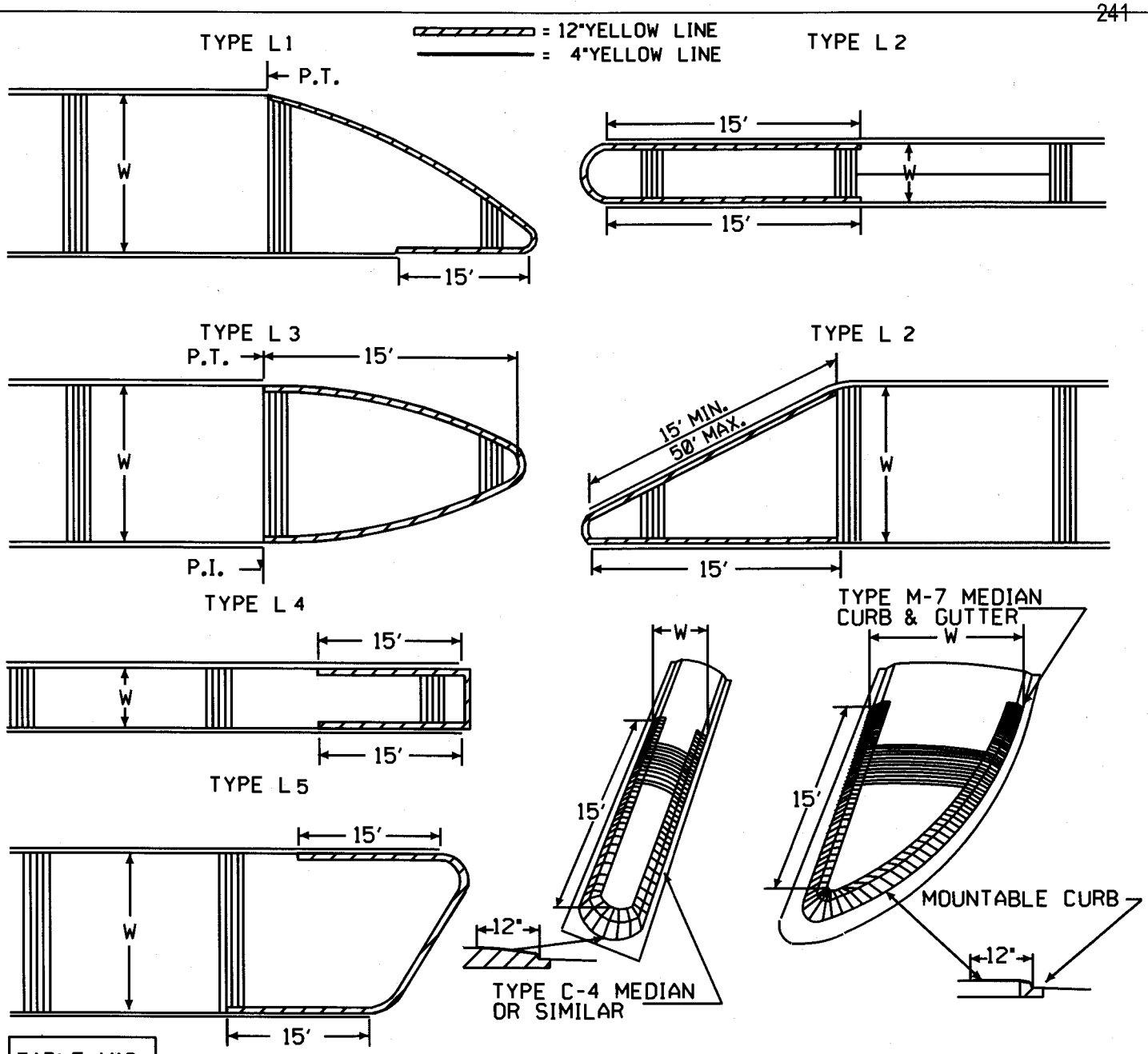

TABLE M12

TOTAL APPROXIMATE LENGTH IN FEET FOR 12"YELLOW LINE									
	W	2'	4'	6'	8'	10'	12'	14'	16'
TYPE	L1	-	-	-	40	45	50	55	60
	L2	31	35	38	41	44	45	49	58
	L3	-	-	-	36	41	45	49	58
	L4	32	34	36	38	-	-	-	-
	L5	-	-	37	40	43	46	48	51

STANDARD T-13

TWO WAY TRAFFIC:

NOT TO SCALE:

MOUNTABLE MEDIANS
TYPICAL NOSE MARKING
TMD-109-3

= 12"YELLOW LINE
= 4"YELLOW LINE

TYPE L1

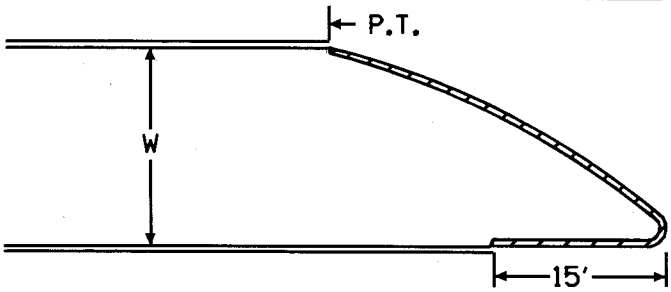

TYPE L 2

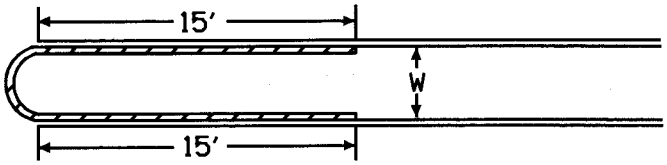

TYPE L 3

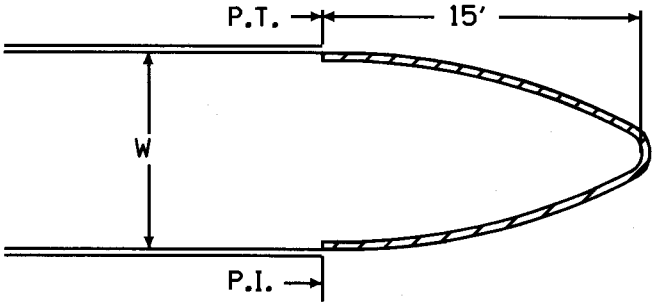

TYPE L 2

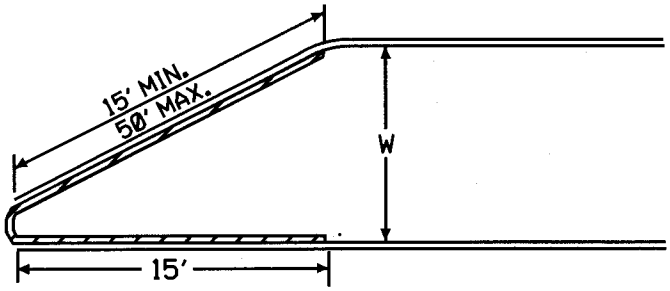

TYPE L 5

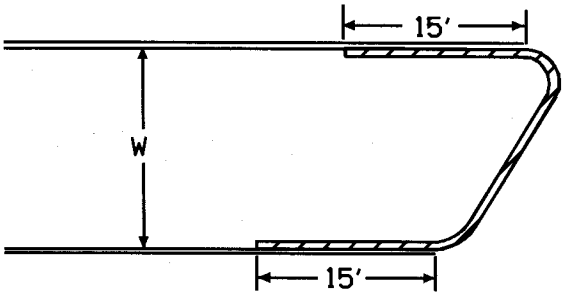

TYPE L 6

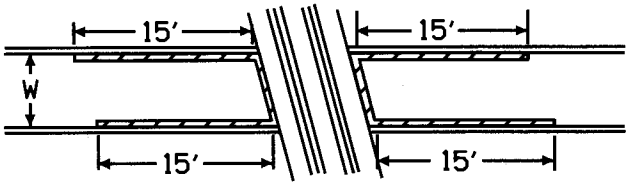

RAILROAD CROSSING

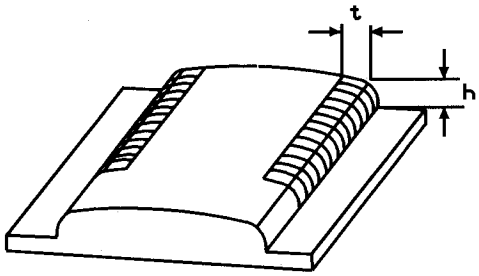

t+ h= 12"

TABLE B12

TOTAL APPROXIMATE LENGTH IN FEET FOR 12"YELLOW LINE								
	W	2'	4'	6'	8'	10'	12'	14'	16'
TYPE	L1	-	-	-	40	45	50	55	60
	L2	31	35	38	41	44	49	50	54
	L3	-	-	-	36	41	45	49	58
	L5	-	-	37	40	43	46	48	51
	L	-	-	36	38	40	42	44	46

EACH APPROACH

STANDARD T-14

TWO WAY TRAFFIC:

NOT TO SCALE:

BARRIER MEDIANS
TYPICAL NOSE MARKING
TMD-110-2

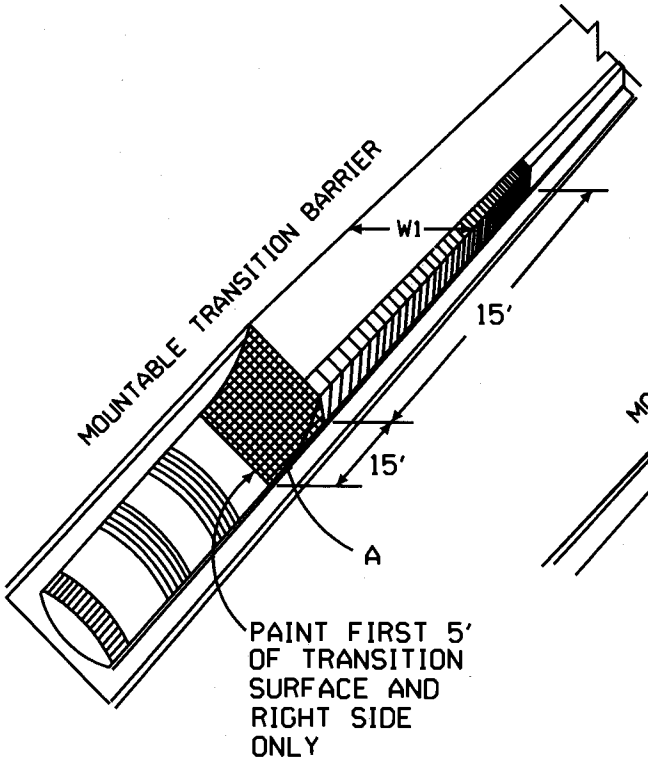

TWO WAY TRAFFIC

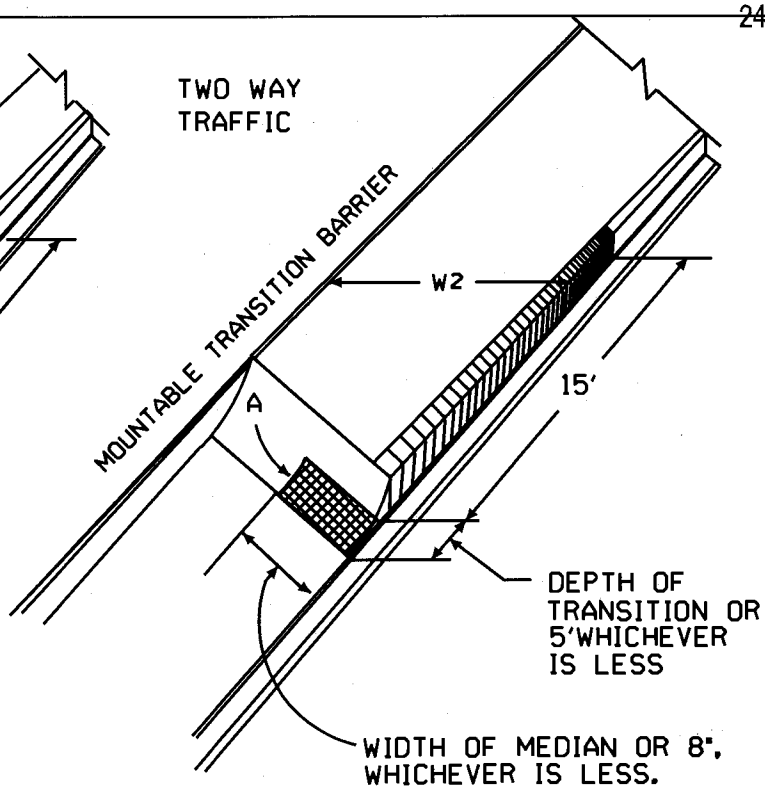

MOUNTABLE TO BARRIER MEDIAN S TYPICAL TRANSITION :

- 12"YELLOW LINE
- YELLOW MEDIAN
- 4"YELLOW LINE
- 12"OR 6"WHITE LINE

APPROXAMATE AREA IN SQUARE F.T. FOR PAINTED YELLOW MEDIAN (A

	W1				W2
	2'	4'	6'	8'	8'-16'
(A	11.3	21.3	31.3	41.3	41.3

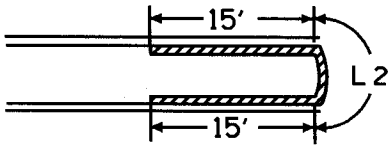

L2 SEE TABLE M12 B12 OR

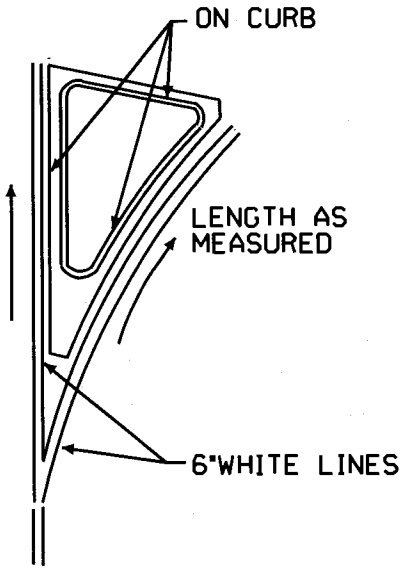

GENERAL NOTE:

SPECIAL CONDITIONS NOT SHOWN ON THESE STANDARDS SHALL BE MARKED IN ACCORDANCE WITH PLANES SUBMITTED FOR THE SPECIFIC LOCATION.WHERE PLANS ARE NOT AVAILABLE, THE MARKINGS SHALL BE IN ACCORDANCE WITH THE APPLICABLE PORTIONS IN PART III OF THE 1988 EDITION OF THE MANUAL ON UNIFORM TRAFFIC CONTROL DEVICES,THE MARCH,1990 ILLINIOS SUPLEMENT TO THE MANUAL AND AS SPECIFIED BY THE TRAFFIC ENGINEER.

STANDARD T-15

NOT TO SCALE:

BARRIER ISLANDS
TYPICAL MARKINGS
TMD-111-3

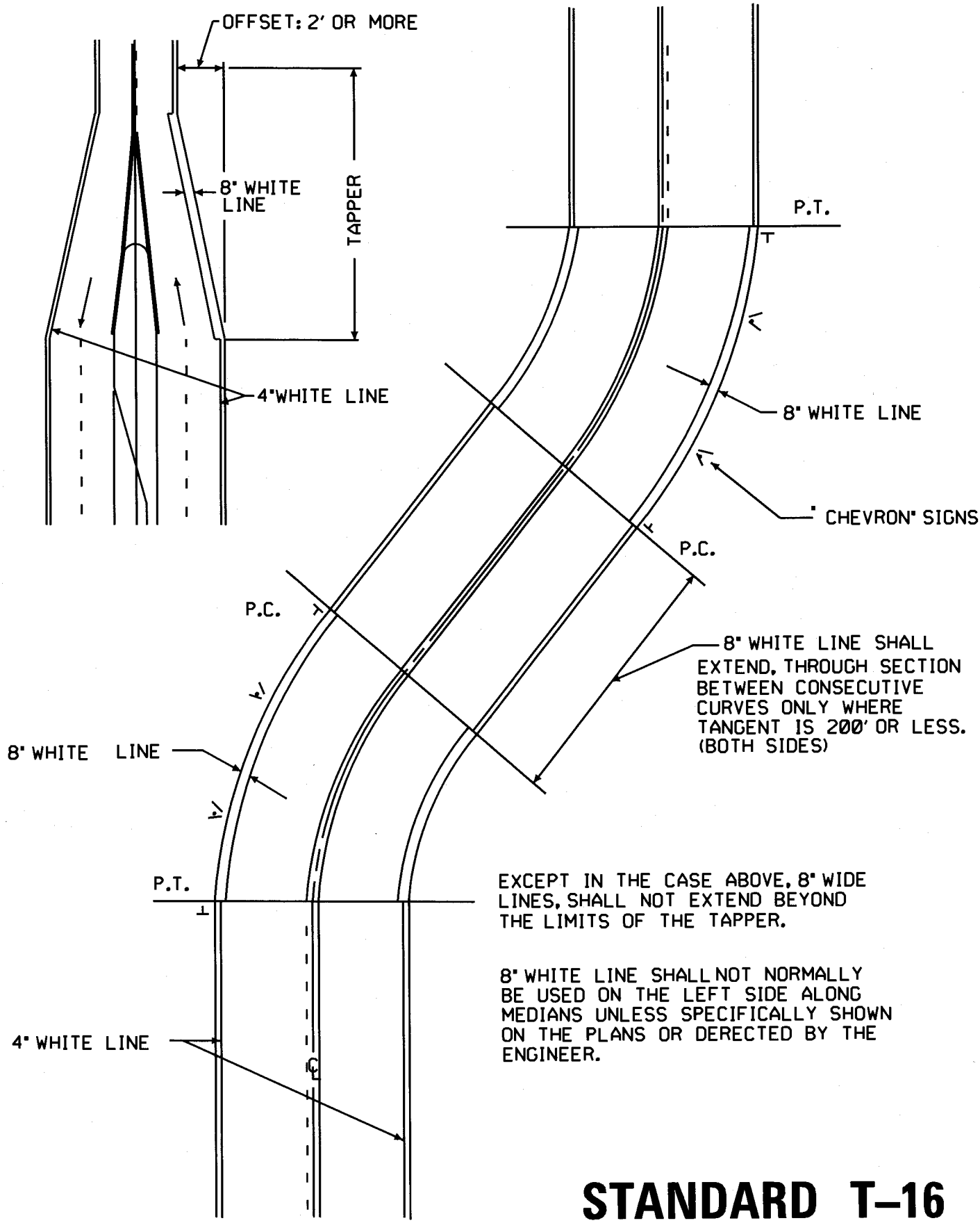

STANDARD T-16

TYPICAL MARKING
EDGELINE ALONG CURVES AND LANE REDUCTIONS
TMD- 112-3

NOT TO SCALE:

2 LANE-2 WAY

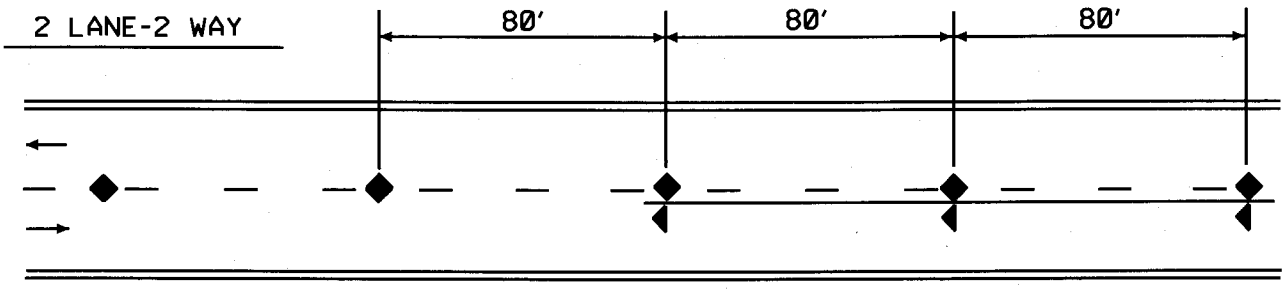

40' O.C. THROUGH CURVE

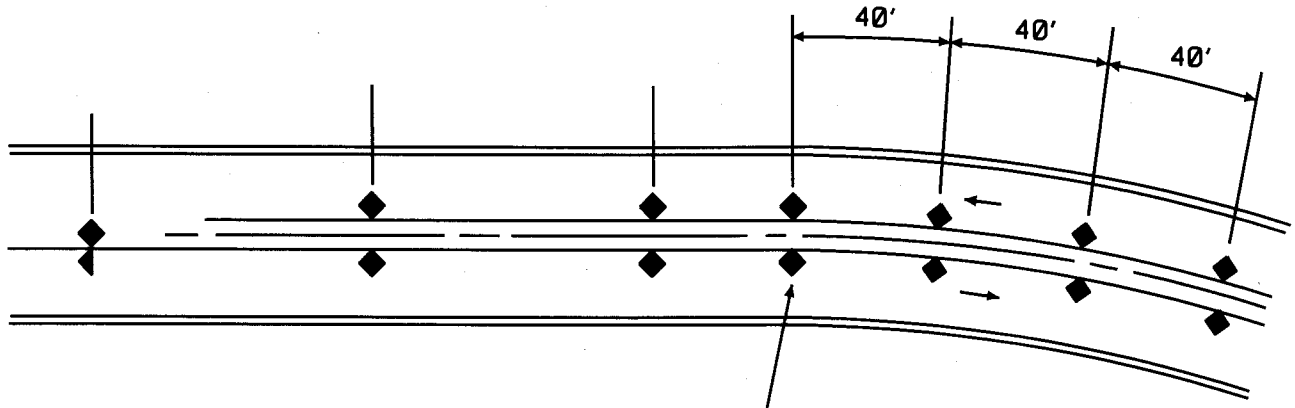

120' O.C.WHERE POSTED
SPEED IS HIGHER THAN 45 M.P.H.

SEQUENCE OF REDUCED SPACING SHALL BEGIN AND END A MAXIMUM OF 20' IN ADVANCE OF OR BEYOND THE BEGINNING (AND END) OF CURVE.

MULTILANE-2 WAY

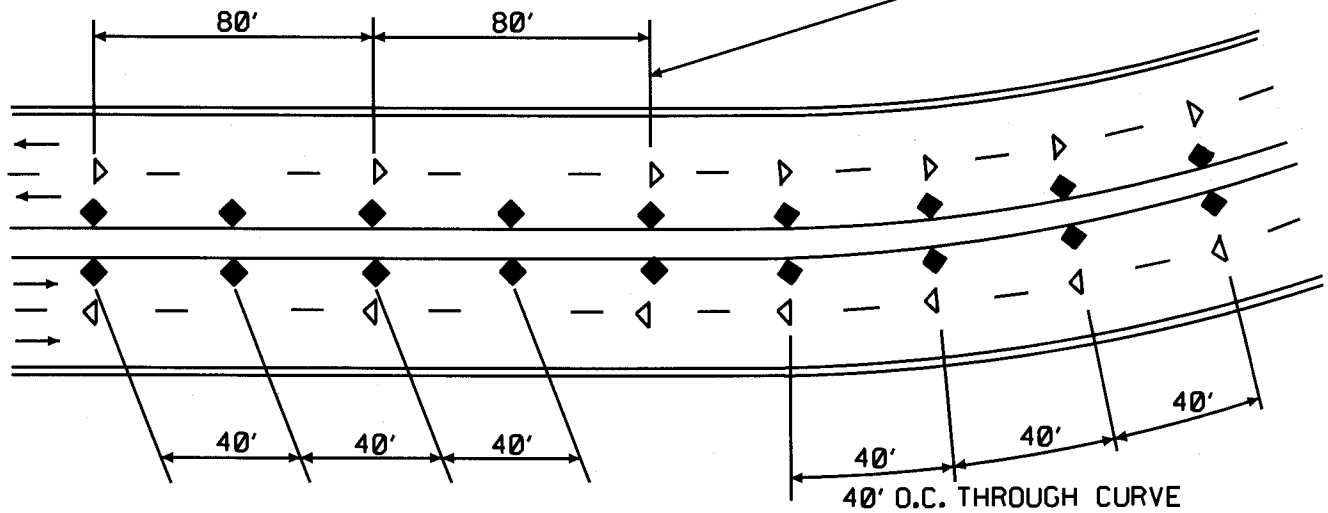

40' O.C. THROUGH CURVE
LANE LINES AND CENTERLINES

UNLESS OTHERWISE DIRECTED,MARKERS SHALL NOT BE USED ADJACENT TO A RAISED MEDIAN.

NOTES: MARKERS SHALL BE OFFSET 2" TO 3" FROM ADJACENT LINE MMARKING.

MARKERS SHALL BE LOCATED IN THE CENTER OF THE GAP BETWEEN SEGMENTS OF SKIP- DASH LINES.

MARKER SYMBOLS:

- ◀ ONE-WAY YELLOW
- ◆ TWO-WAY YELLOW
- ◁ ONE-WAY WHITE

STANDARD T-17

NOT TO SCALE:

TYPICAL APPLICATION
RAISED REFLECTIVE PAVEMENT MARKERS
TMD-113A-1

TYPICAL APPROACH TO CHANNELIZED MEDIANS

(WHEN SPECIFIED)

NOT TO SCALE:

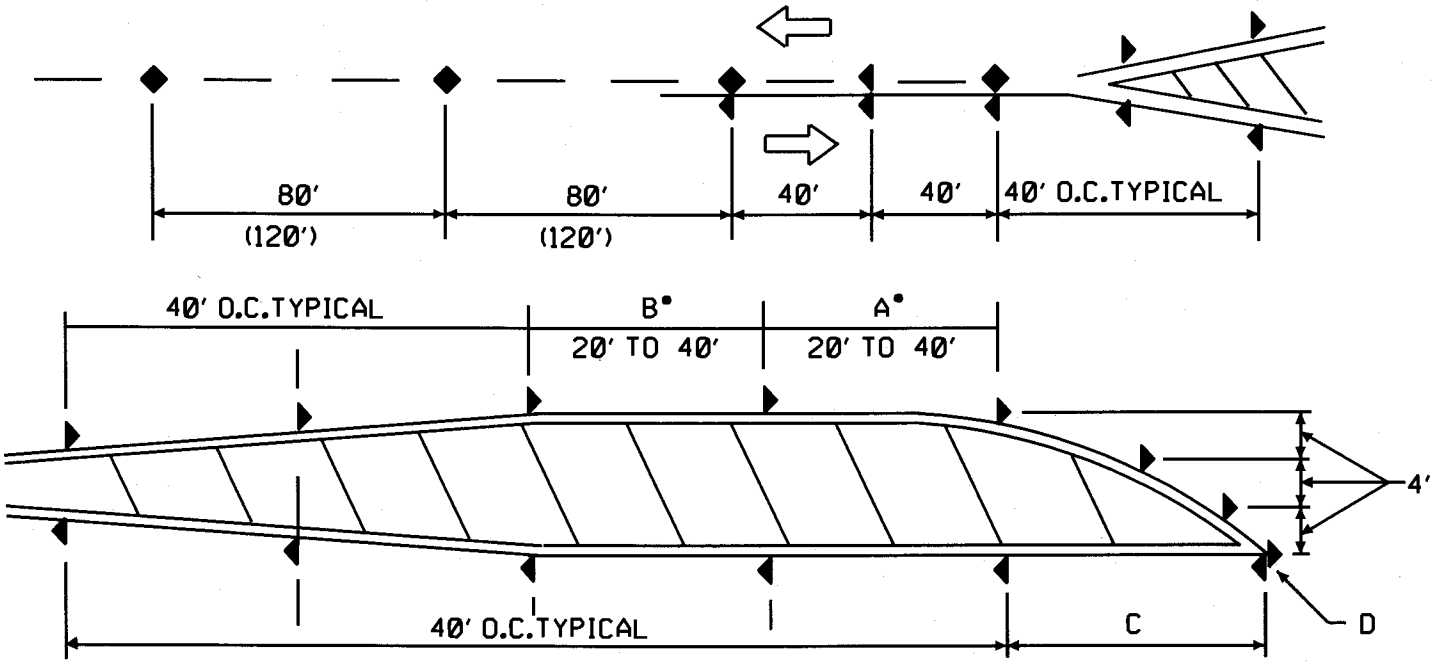

• ADJUSTMENTS TO THE NORMAL 40' O.C.SEQUENCE SHALL BE ACCOMPLISHED ONLY WITHIN A• AND B• AS SHOWN ABOVE. DEMENSION B• MUST BE EQUAL TO OR LONGER THAN DIMENSION A•.
MARKER D SHALL BE OMITTED IF DIMENSION C IS LESS THAN 40'.

NOTE: NOT MORE THAN TWO MAKERS ON ETHER SIDE SHALL BE USED ADJACENT TO A CONTINUOUS RAISED MEDIAN IN ADVANCE DF OR BEYOND THE TAPERED SECTION.

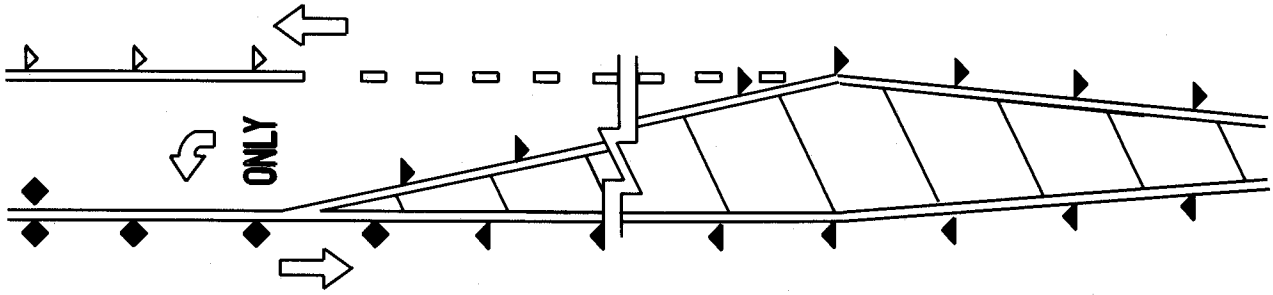

FOR KEY SYMBOLS AND DETAILS SEE TMD-113A.

PAINTED CHANNELIZED

STANDARD T–18

TYPICAL APPLICATION
RAISED REFLECTIVE PAVEMENT MARKERS
TMD-113B-2

The trenching and backfilling for sewer work shall be as shown in STANDARD D-11 in accordance with Article 550.07 of the IDOT Standard Specifications for Road and Bridge Construction. This work will be paid for at the unit price for PIPE CULVERT or STORM SEWER of the size, type and class called for on the plans and shall include all work and materials with the exception of rock excavation.

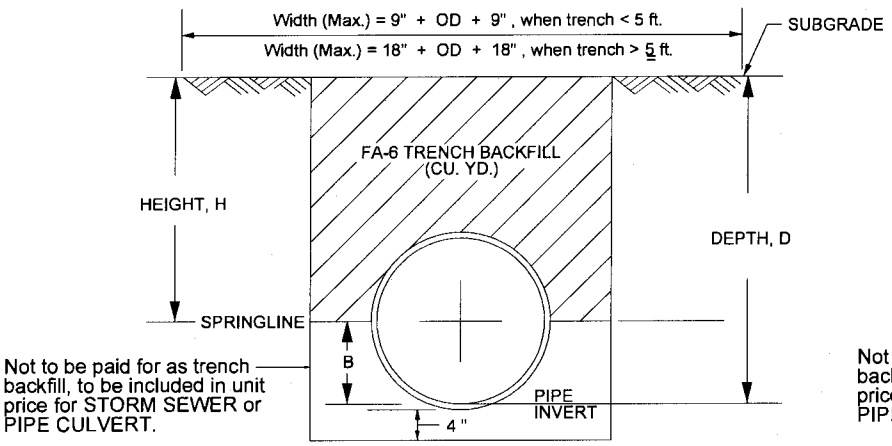

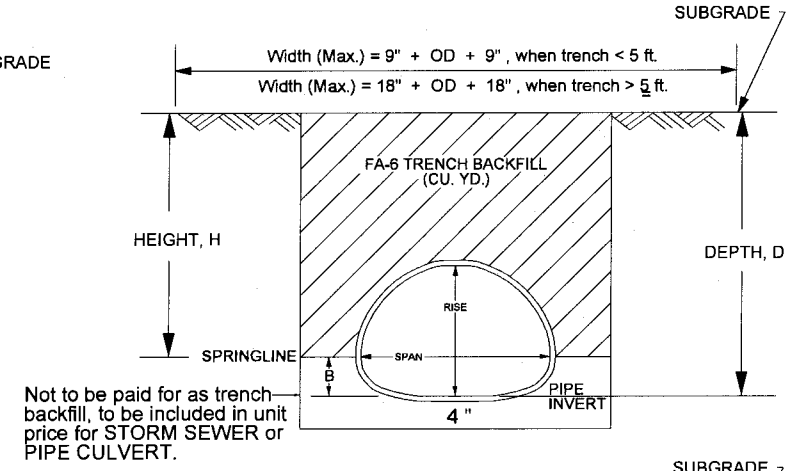

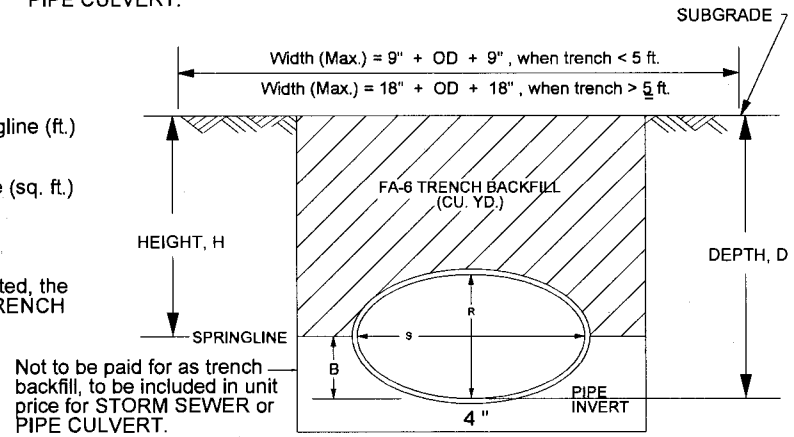

W = Width of trench (ft)

D = Depth from Subgrade to Pipe Invert (ft.)

H = Height of Trench Backfill Limits (ft) = (D-B)

B = Distance from Pipe Invert to Springline (ft.)

L = Length of Trench (ft.)

A = End Area of Pipe above Springline (sq. ft.)

Volume (Cu. Yds.) = [(H x W) - A] x L x 1/27

NOTE: If the field engineer measures a width of trench less than the maximum permitted, the values included in the trench backfill tables will be of no value. The actual volume of TRENCH BACKFILL used will therefore have to be calculated using the following formula:

$$\text{Cubic Yards} = \left[(H' \times W') - \left(\frac{\text{Pipe End Area}}{2} \right) \right] \times L' \times 1/27$$

Trench Backfill shall be FA-6 backfilled in accordance with Article 550.07 of the Standard Specifications. Payment for TRENCH BACKFILL to be from bottom of subgrade to springline of pipe.

Bedding: FA-6 shall be deposited to a depth of springline of pipe and then water jetted through holes on each side of the pipe. The jetting tube shall extend to a depth of at least half the distance between the spring line and the bottom of the pipe and shall be spaced as directed by the engineer but no farther than six feet apart.

VARIOUS LOCATIONS	COUNTY HIGHWAY: VARIOUS FISCAL YEAR: 2015 SECTION: 14-PPRPS-01-PV	COUNTY OF COOK DEPARTMENT OF TRANSPORTATION AND HIGHWAYS	COMPUTED: MK DRAWN: MK CHECKED: KLP	REVISIONS REVISED BORDER TRENCH BACKFILL (FA-6 ONLY) PER IDOT SPECS	DATE 01-28-14 05-17-13 06-13-12	BEDDING DETAIL DRAINAGE STANDARD D-11	DU-1 SCALE: NONE SHEET	

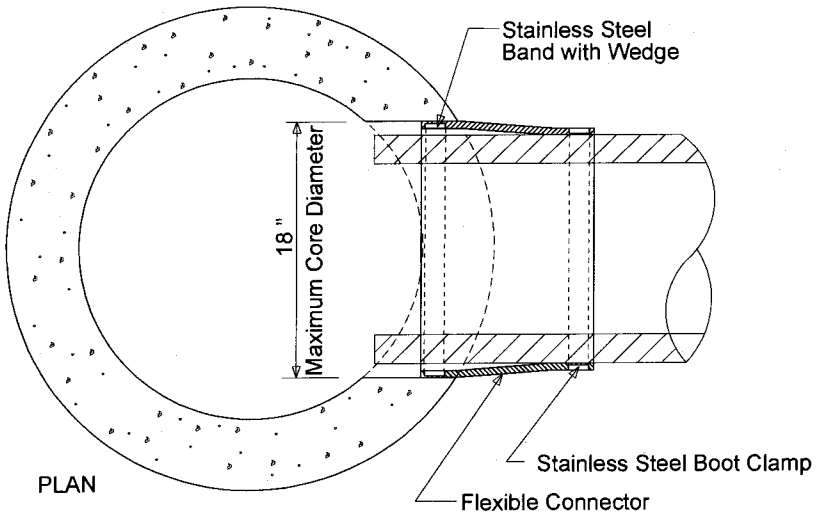

ALTERNATE MATERIALS FOR WALLS	T (min)
Precast Reinforced Concrete Section	5"
Concrete Masonry Unit	5"
Cast-in-Place Concrete	6"
Brick Masonry	8"

GENERAL NOTES

This standard conforms to IDOT STANDARD 602301-03 except for the Cook County requirement to provide a minimum wall thickness of 5 inches and a minimum depth of 20 inches to accomodate core and boot connections to inlet.

See Cook County Standard D-60 Core and Boot Connection.

Bottom Slabs may be connected to the riser as determined by the fabricator; however, only a single row of reinforcement around the perimeter may be utilized.

Bottom slabs shall be reinforced with a maximum of 0.24 sq. in./ft. in both directions with a maximum spacing of 10 inches.

All dimensions are in inches unless otherwise shown.

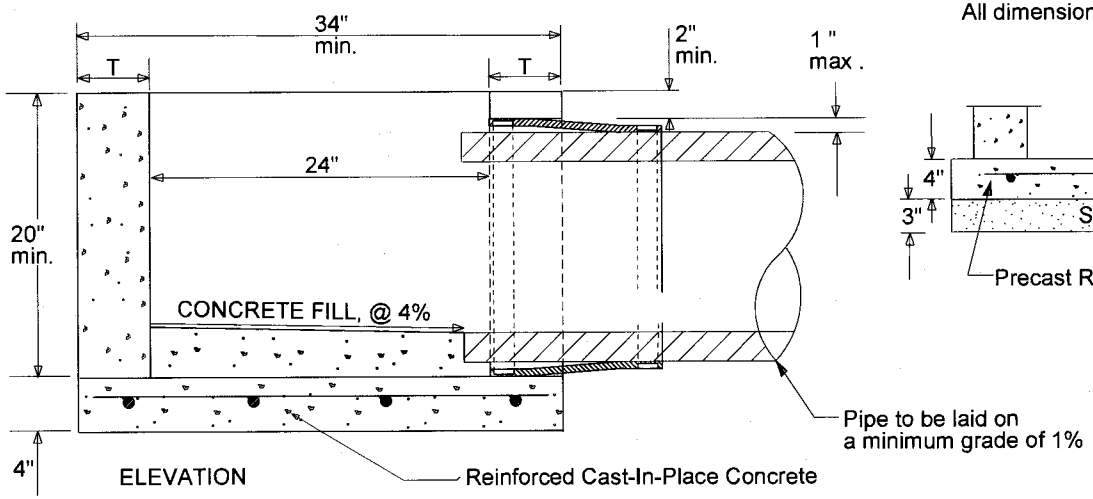

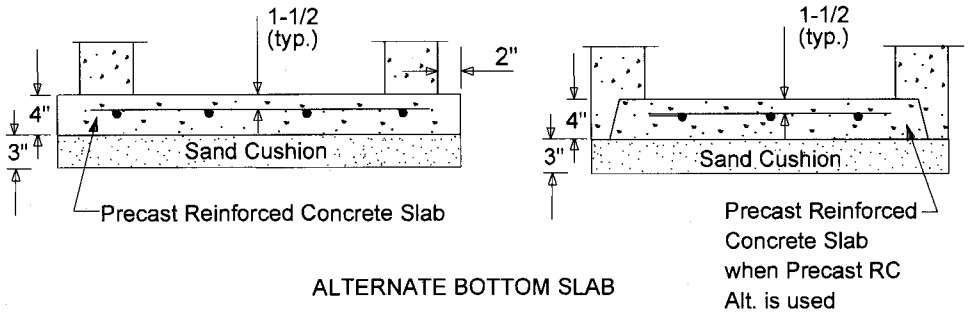

ALTERNATE BOTTOM SLAB

REVISION	
DATE	COMMENT
12-02-11	5 INCH WALL THICKNESS FOR INLET - TYPE A
01-24-12	20 INCH MIN DEPTH THICKNESS FOR TYPE A - INLET

VARIOUS LOCATIONS	COUNTY HIGHWAY: VARIOUS FISCAL YEAR: 2015 SECTION: 14-PPRPS-01-PV	COUNTY OF COOK DEPARTMENT OF TRANSPORTATION AND HIGHWAYS	COMPUTED: MK DRAWN: MK CHECKED: KLP	REVISIONS	DATE	PROJECT NAME DRAINAGE INLET TYPE A STANDARD D-33	DU-2 SCALE: NONE SHEET

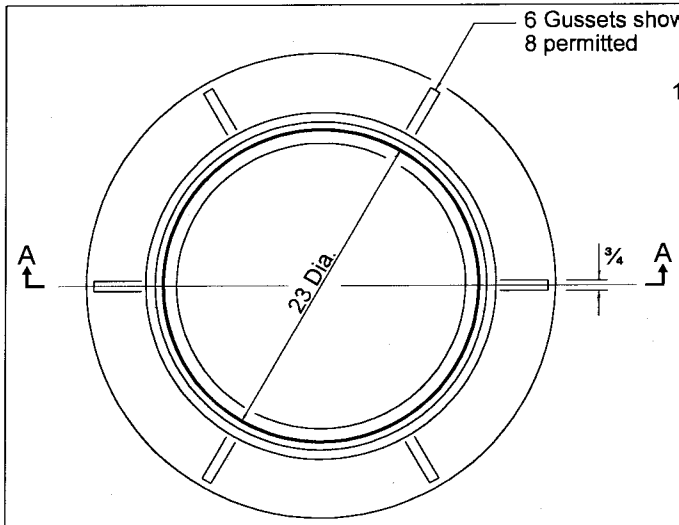

CAST FRAME

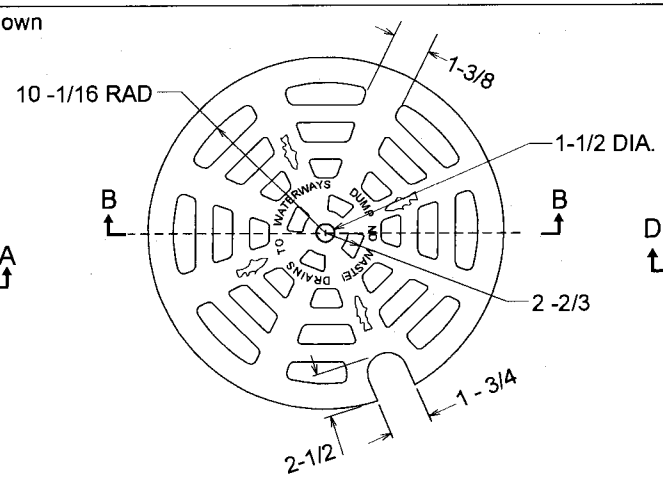

CAST OPEN LID
Gray Iron Lid

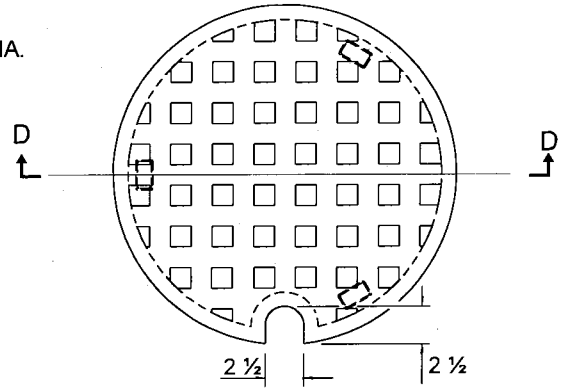

CAST CLOSED LID
Gray Iron Lid

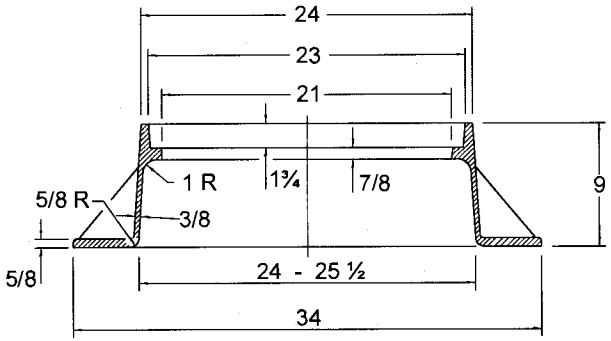

SECTION A-A
Gray Iron

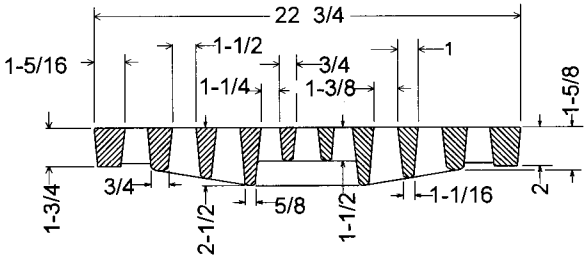

SECTION B-B

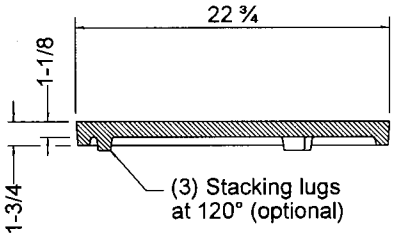

SECTION D-D

GENERAL NOTES

This Standard conforms to IDOT Standard 604001 except for the Cook County requirement for "DRAINS TO WATERWAYS" "DUMP NO WASTE" and trout logo on the Type 1 - Open Lid Flat Grate.

All dimensions are in inches unless otherwise shown.

REVISION	
DATE	COMMENT
04-06-12 - MK	DRAINS TO WATERWAYS DUMP NO WASTE

VARIOUS LOCATIONS	COUNTY HIGHWAY: VARIOUS FISCAL YEAR: 2015 SECTION: 14-PPRPS-01-PV	COUNTY OF COOK DEPARTMENT OF TRANSPORTATION AND HIGHWAYS	COMPUTED: MK DRAWN: MK CHECKED: KLP	REVISIONS / DATE	PROJECT NAME DRAINAGE FRAME AND LID TYPE I (DUMP NO WASTE – DRAINS TO RIVER) STANDARD D-40	DU-3 SCALE: NONE SHEET	

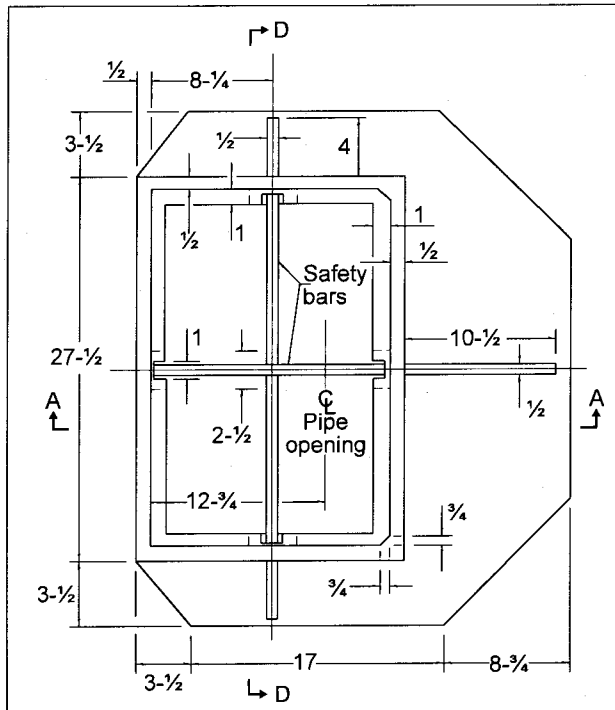

PLAN - FRAME

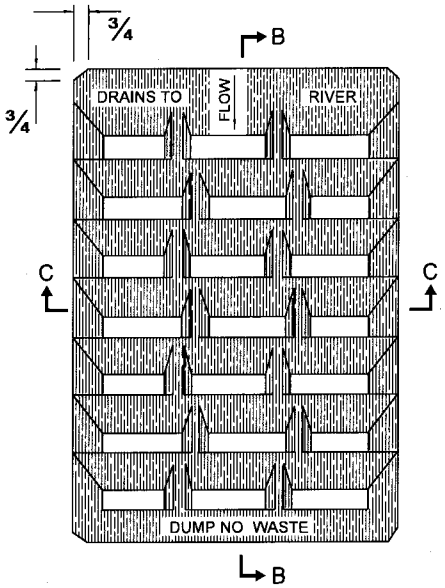

PLAN - GRATE 23V

SECTION B-B

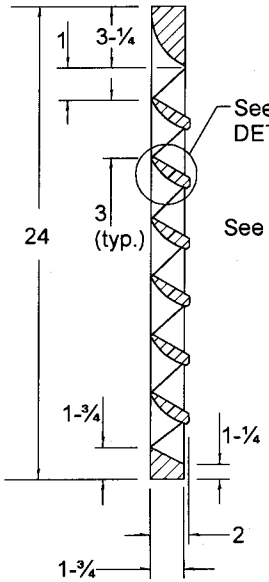

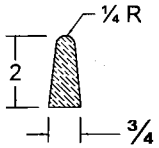

DETAIL A

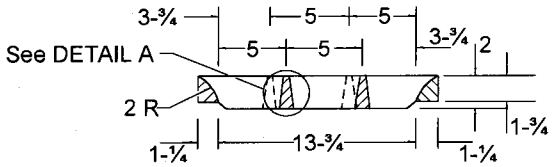

SECTION C-C

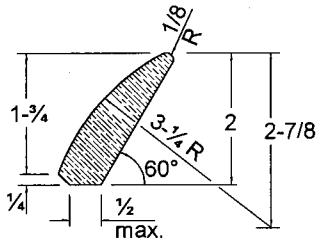

DETAIL B

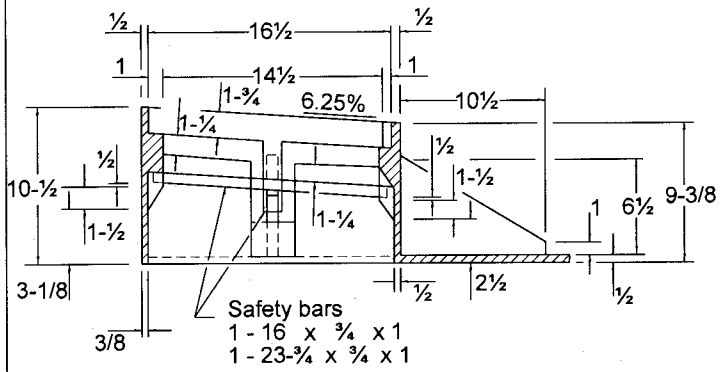

SECTION A-A

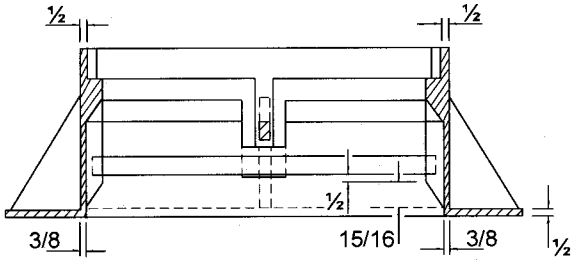

SECTION D-D

GENERAL NOTES

This Standard conforms to IDOT Standard 604086 except for the Cook County requirement for lettering frame with "DRAINS TO RIVER" "DUMP NO WASTE".

All dimensions are in inches unless otherwise shown.

REVISION	
DATE	COMMENT
01-13-12	INCHES
02-26-10	DRAINS TO RIVER DUMP NO WASTE

VARIOUS LOCATIONS	COUNTY HIGHWAY: VARIOUS	FISCAL YEAR: 2015	SECTION: 14-PPRPS-01-PV

COUNTY OF COOK
DEPARTMENT OF TRANSPORTATION AND HIGHWAYS

COMPUTED: MK
DRAWN: MK
CHECKED: KLP

REVISIONS | DATE

PROJECT NAME
DRAINAGE FRAME AND GRATE – TYPE 23V (DUMP NO WASTE – DRAINS TO RIVER) STANDARD D-41

DU-4
SCALE: NONE SHEET

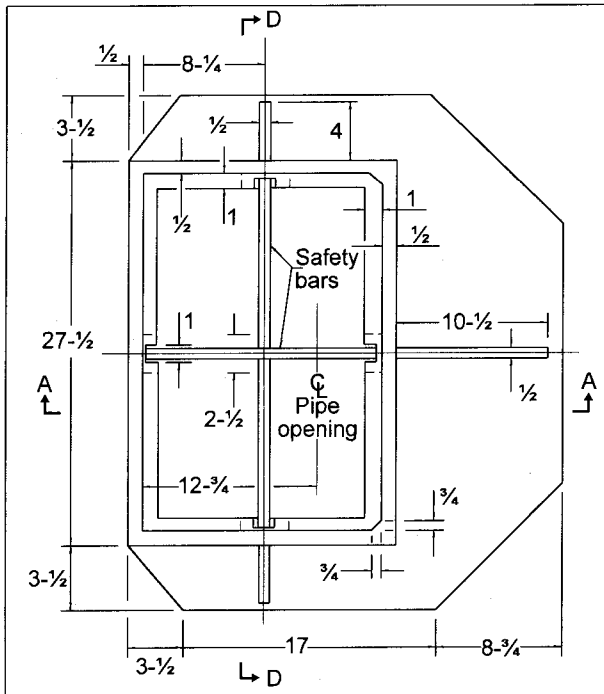

PLAN - FRAME

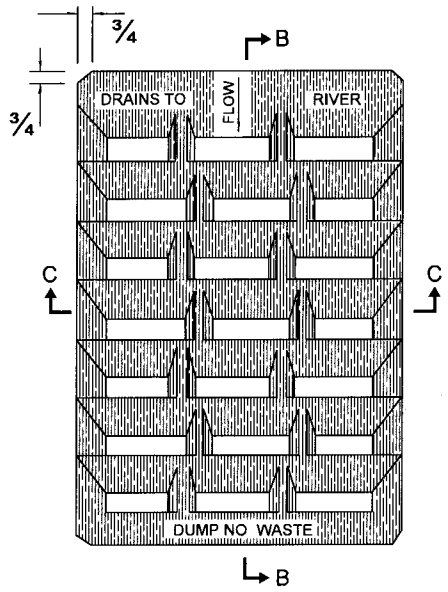

PLAN - GRATE 23V

SECTION B-B

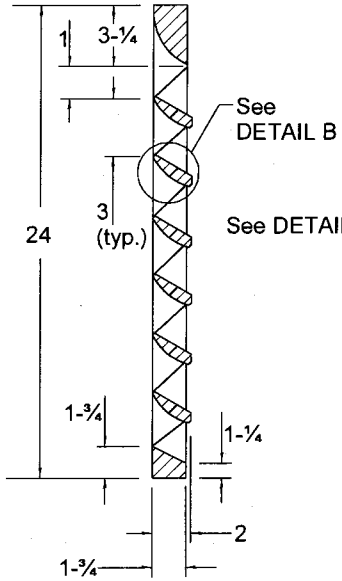

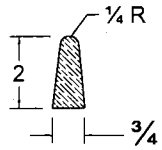

DETAIL A

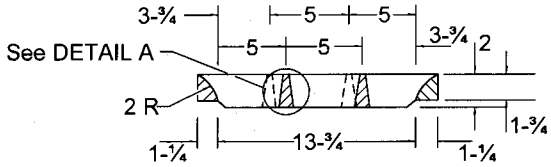

SECTION C-C

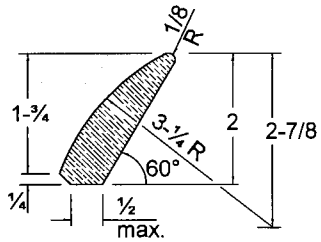

DETAIL B

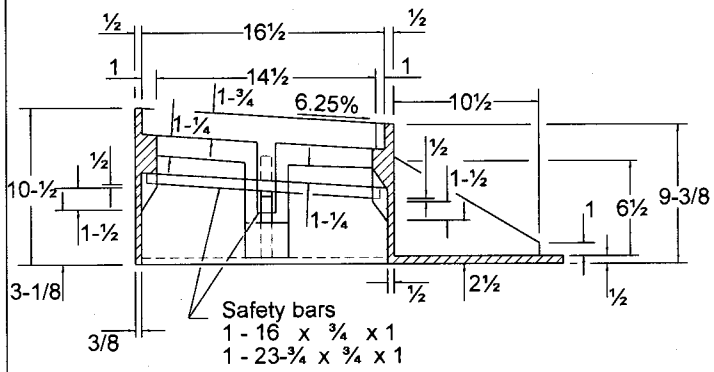

SECTION A-A

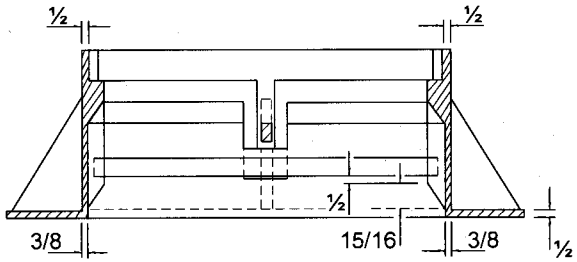

SECTION D-D

GENERAL NOTES

This Standard conforms to IDOT Standard 604086 except for the Cook County requirement for lettering frame with "DRAINS TO RIVER" "DUMP NO WASTE".

All dimensions are in inches unless otherwise shown.

REVISION	
DATE	COMMENT
01-13-12	INCHES
02-25-10	DRAINS TO RIVER DUMP NO WASTE

VARIOUS LOCATIONS	COUNTY HIGHWAY: VARIOUS FISCAL YEAR: 2015 SECTION: 14-PPRPS-01-PV	COUNTY OF COOK DEPARTMENT OF TRANSPORTATION AND HIGHWAYS	COMPUTED: MK DRAWN: MK CHECKED: KLP	REVISIONS	DATE	PROJECT NAME DRAINAGE FRAME AND GRATE – TYPE 23V (DUMP NO WASTE – DRAINS TO RIVER) STANDARD D-41	DU-5 SCALE: NONE SHEET

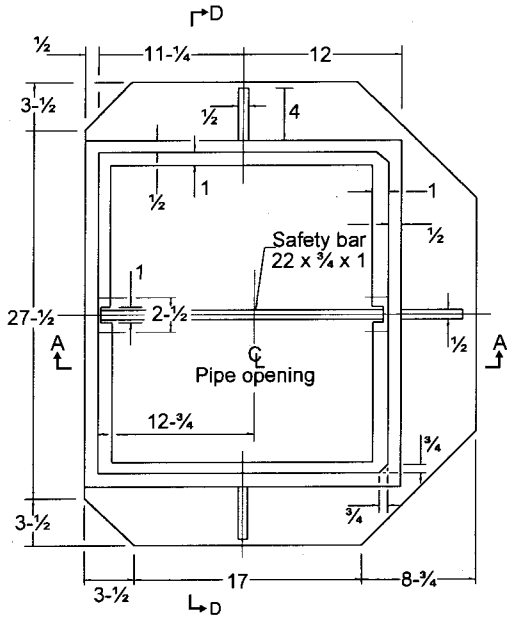

PLAN - FRAME

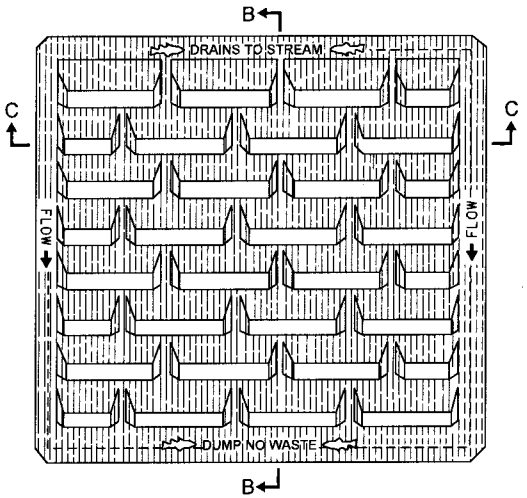

PLAN - GRATE 24V

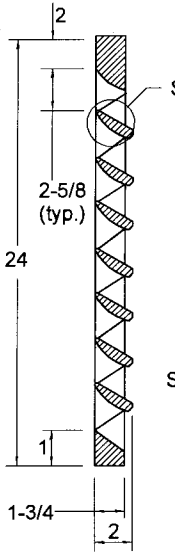

SECTION B-B

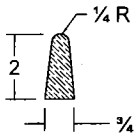

DETAIL A

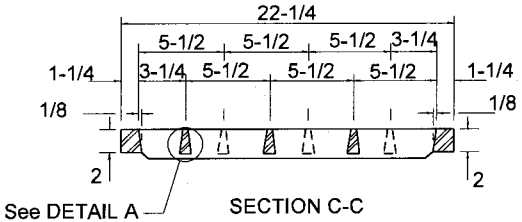

SECTION C-C

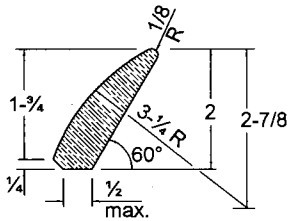

DETAIL B

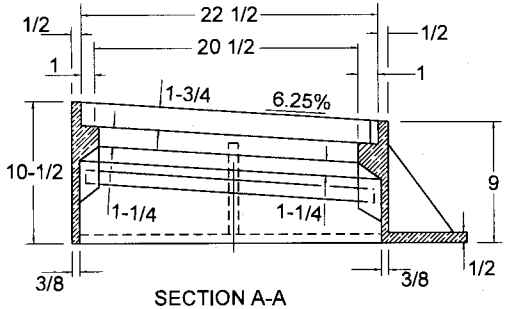

SECTION A-A

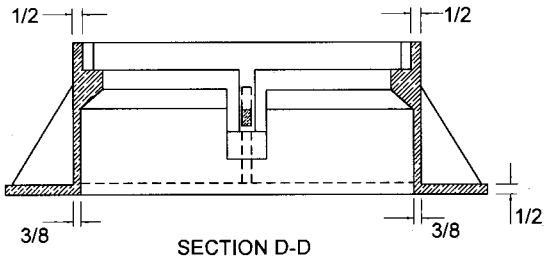

SECTION D-D

GENERAL NOTES

This Standard conforms to IDOT Standard 604091 except for the Cook County requirement for lettering frame with "DRAINS TO STREAM" "DUMP NO WASTE" with trout logo.

All dimensions are in inches unless otherwise shown.

REVISION	
DATE	COMMENT
01-13-12	INCHES (MILLIMETERS)
02-25-10	DRAINS TO STREAM DUMP NO WASTE

VARIOUS LOCATIONS	COUNTY HIGHWAY: VARIOUS FISCAL YEAR: 2015 SECTION: 14-PPRPS-01-PV	COUNTY OF COOK DEPARTMENT OF TRANSPORTATION AND HIGHWAYS	COMPUTED: MK DRAWN: MK CHECKED: KLP	REVISIONS	DATE	PROJECT NAME DRAINAGE FRAME & GRATE – TYPE 24V (DUMP NO WASTE – DRAINS TO RIVER) STANDARD D-42	DU-6 SCALE: NONE SHEET

MANHOLE FRAME & LID
HEAVY DUTY
(Closed)

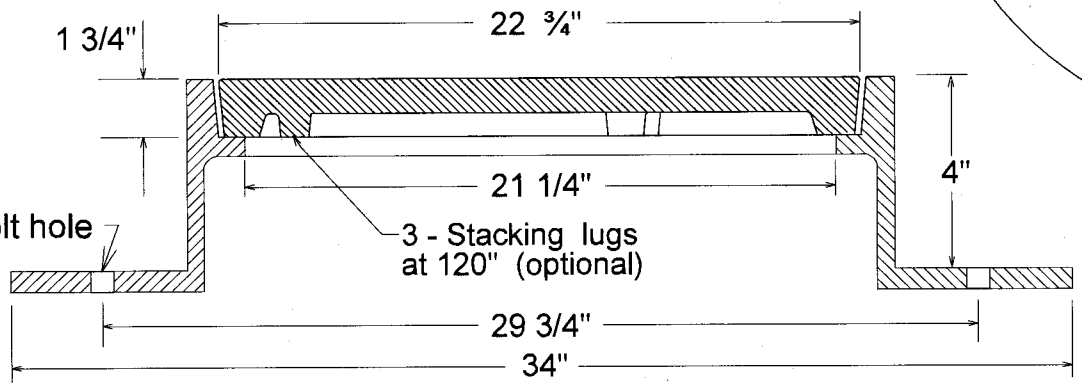

CAST FRAME

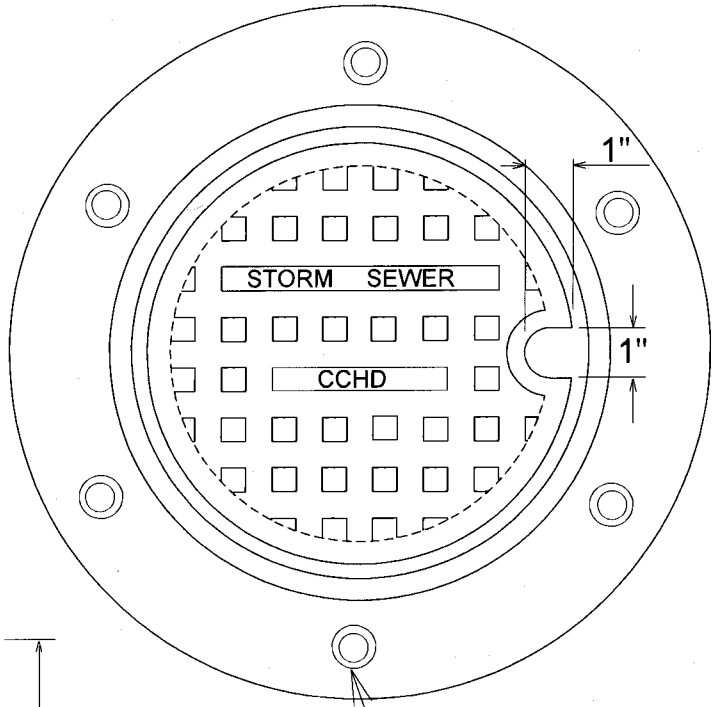

Furnished with
six 3/4" anchor holes
equally spaced

REVISION	
DATE	COMMENT

VARIOUS LOCATIONS	COUNTY HIGHWAY: VARIOUS FISCAL YEAR: 2015 SECTION: 14-PPRPS-01-PV	COUNTY OF COOK DEPARTMENT OF TRANSPORTATION AND HIGHWAYS	COMPUTED: MK DRAWN: MK CHECKED: KLP	REVISIONS / DATE	PROJECT NAME DRAINAGE MANHOLE FRAME & LID HEAVY DUTY STANDARD D-44	DU-7 SCALE: NONE SHEET	

MEDIUM DUTY
DITCH GRATE , STOOL TYPE

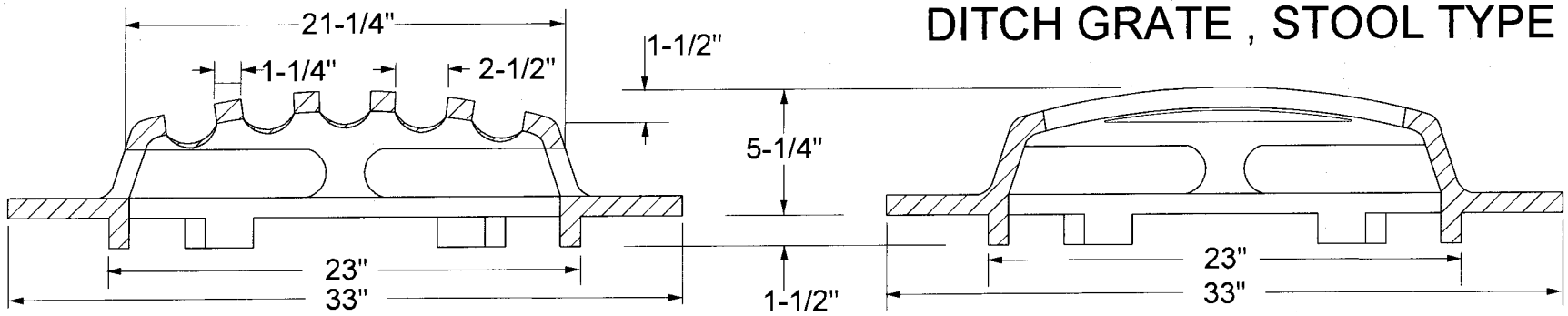

MEDIUM DUTY
Total Weight 205 lbs

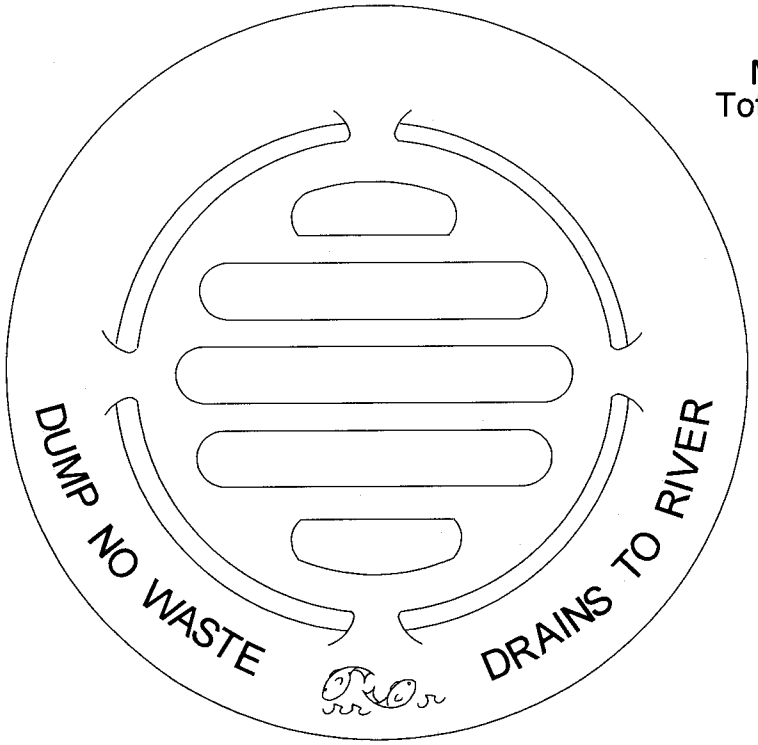

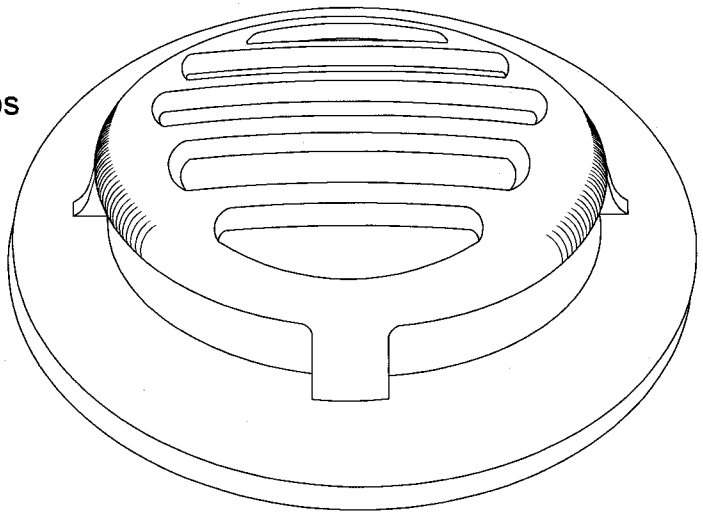

GENERAL NOTES

Cook County requires Medium Duty Grate lettering along flange with trout logo "DRAINS TO RIVER" "DUMP NO WASTE"

All dimensions are in inches unless otherwise shown.

REVISION	
DATE	COMMENT
09-15-10	REF: ARTICLE 550.07
02-03-2012	

VARIOUS LOCATIONS	COUNTY HIGHWAY: VARIOUS FISCAL YEAR: 2015 SECTION: 14-PPRPS-01-PV	COUNTY OF COOK DEPARTMENT OF TRANSPORTATION AND HIGHWAYS	COMPUTED: MK DRAWN: MK CHECKED: KLP	REVISIONS	DATE	PROJECT NAME DRAINAGE DITCH GRATE - STOOL TYPE STANDARD D-45	DU-8 SCALE: NONE SHEET

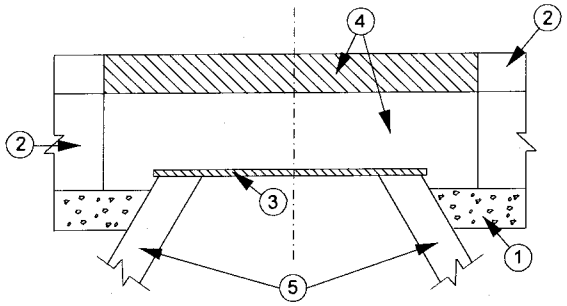

STAGE 1 (BEFORE PAVEMENT MILLING)

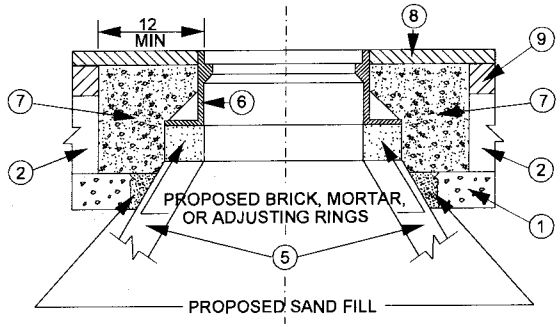

STAGE 2 (AFTER PAVEMENT MILLING)

LEGEND

1. SUB-BASE GRANULAR MATERIAL
2. EXISTING PAVEMENT
3. 36 (900) DIAMETER METAL PLATE
4. PROPOSED CRUSHED STONE AND BITUMINOUS MATERIAL
5. EXISTING STRUCTURE
6. FRAME AND LID (SEE NOTES)
7. CLASS SI CONCRETE, BITUMINOUS CONCRETE SURFACE OR BINDER COURSE MATERIAL
8. PROPOSED BITUMINOUS CONCRETE SURFACE COURSE
9. PROPOSED BITUMINOUS CONCRETE BINDER COURSE

DETAILS FOR FRAMES AND LIDS ADJUSTMENT WITH MILLING

LOCATION OF STRUCTURES:

THE CONTRACTOR WILL BE REQUIRED TO KEEP A RECORD OF THE LOCATIONS OF THE BURIED STRUCTURES ACCORDING TO THE STATION A DNDISTANCE LEFT OR RIGHT OF THE CENTERLINE OF PAVEMENT. UPON COMPLETION OF THE WORK THE CONTACTOR WILL DELIVER THE RECORD TO THE ENGINEER.

BASIS OF PAYMENT:

FRAMES AND LIDS TO BE ADJUSTED, SPECIAL EACH

NEW FRAMES AND LIDS, WHEN SPECIFIED, WILL BE PAID FOR SEPARATELY.

CONSTRUCTION PROCEDURES:

STAGE 1 (BEFORE PAVEMENT MILLING)

A) REMOVE A MINIMUM OF 12 INCHES OF THE PAVEMENT FROM AROUND THE STRUCTURE.

B) REMOVE THE EXISTING FRAME AND LID FROM THE STRUCTURE.

C) COVER THE STRUCTURE OPENING WITH A 36 (900) DIAMETER METAL PLATE.

D) BACKFILL WITH CRUSHED STONE AND A MINIMUM 1-½ INCH THICK BITUMINOUS MATERIAL APPROVED BY THE ENGINEER.

STAGE 2 (AFTER PAVEMENT MILLING)

A) REMOVE THE BITUMINOUS MATERIAL AND CRUSHED STONE.

B) INSTALL THE FRAME AND LID; ADJUST THE FRAME TO ITS FINAL SURFACE ELEVATION.

C) THE SURROUNDING SPACE SHALL BE FILLED WITH CLASS SI CONCRETE OR BITUMINOUS CONCRETE SURFACE OR BINDER COURSE MATERIAL TO THE ELEVATION OF THE SURFACE PF THE EXISTING BASE COURSE OR THE BINDER COURSE.

NOTES

1. THIS STANDARD CONFORMS TO THE IDOT BUREAU OF DESIGN SPECIFICATION FOR FRAMES AND LIDS TO BE ADJUSTED (SPECIAL).
2. EXISTING BROKEN FRAMES AND LIDS SHALL BE REMOVED AND DISPOSED OF BY THE CONTRACTOR AND SHALL BE REPLACED AS DIRECTED BY THE ENGINEER. REPLACEMENT FRAMES AND LIDS WILL BE PAID FOR IN ACCORDANCE WITH ARTICLE 109.04 OF THE STANDARD SPECIFICATIONS UNLESS A SEPARATE ITEM HAS BEEN PROVIDED.
3. IF THE EXISTING LIDS ARE OPEN, THE FRAME WILL BE ADJUSTED TO THE ELEVATION OF THE MILLED PAVEMENT SURFACE PRIOR TO THE MILLING OPERATION. THE FRAME WILL NOT BE REMOVED AND COVERED BY THE METAL PLATE.
4. CITY OF CHICAGO CASTINGS ARE THE PROPERTY OF THE CITY AND THE CONTRACTOR SHALL NOTIFY THE CITY FOR REMOVAL AND DISPOSITION OF THE CASTINGS.

WHEN STRUCTURES ARE TO BE ADJUSTED OR RECONSTRUCTED, THE LOWERING AND RAISING OF THE FRAMES AND LIDS WILL NOT BE PAID FOR SEPARATELY BUT WILL BE INCLUDED IN THE COST OF THE CORRESPONDING PAY ITEM.

THE PROCEDURE EXPLAINED ABOVE SHALL CONFORM TO THE APPLICABLE PORTIONS OF SECTIONS 353, 406, 602, AND 603 OF THE IDOT STANDARD SPECIFICATIONS FOR ROAD AND BRIDGE CONSTRUCTION.

REVISION	
DATE	COMMENT
01-27-12 - MK	REF: IDOT BD600-03 (BD-8)

ILLINOIS DEPARTMENT OF TRANSPORTATION

DETAILS FOR FRAMES AND LIDS ADJUSTMENT WITH MILLING

SCALE: NONE BD600-03 (BD-8) DRAWN BY: CHECKED BY: 03/21/97 05/14/04

REVISIONS	
NAME	DATE
K. SHAH	10/25/94
R. SHAH	01/30/95
R. SHAH	03/10/95
A. ABBAS	
R. WEIDEMAN	

VARIOUS LOCATIONS	COUNTY HIGHWAY:	VARIOUS
	FISCAL YEAR:	2015
	SECTION:	14-PRRPS-01-PV

COUNTY OF COOK
DEPARTMENT OF TRANSPORTATION AND HIGHWAYS

COMPUTED: MK
DRAWN: MK
CHECKED: KLP

REVISIONS | DATE

PROJECT NAME
DRAINAGE FRAMES & LIDS TO BE ADJUSTED (SPECIAL) STANDARD D-64

DU-9
SCALE: NONE SHEET

SOIL EROSION & SEDIMENT CONTROL STANDARD NOTES

THE FOLLOWING EROSION AND SEDIMENT CONTROL NOTES APPLY TO BEST MANAGEMENT PRACTICES DURING ALL PHASES OF CONSTRUCTION AS DIRECTED BY THE RESIDENT ENGINEER.

ADDITIONAL NOTES MAY BE FOUND ON THE SOIL EROSION AND SEDIMENT CONTROL PLANS.

FOR ALL PROJECTS, THE ENGINEER WILL INSPECT ALL TEMPORARY AND PERMANENT EROSION CONTROL STRUCTURES WEEKLY AND AFTER EACH 1/2 INCH OR MORE RAINSTORM EVENT AND INFORM AND DIRECT THE CONTRACTOR TO REPAIR / REPLACE ALL EROSION CONTROL MATERIALS / STRUCTURES PROMPTLY AS NEEDED.

ONCE CONSTRUCTION IN A DISTURBED AREA HAS BEEN COMPLETED, PERMANENT STABILIZATION MEASURES WILL BE IMPLEMENTED WITHIN SEVEN DAYS.

ALL ADJACENT STREETS MUST BE KEPT CLEAR OF DEBRIS, INSPECTED DAILY, AND CLEANED WHEN NECESSARY.

FOR PROJECTS DISTURBING ONE ACRE OR MORE OF SOIL, THE SOIL AND WATER CONSERVATION DISTRICT MUST BE NOTIFIED ONE WEEK PRIOR TO THE PRE-CONSTRUCTION CONFERENCE, ONE WEEK PRIOR TO THE COMMENCEMENT OF LAND-DISTURBING ACTIVITIES, AND ONE WEEK PRIOR TO FINAL INSPECTION PER NPDES REQUIREMENTS.

FOR PROJECTS DISTURBING ONE ACRE OR MORE OF SOIL, THE SOIL AND WATER CONSERVATION DISTRICT IS RESPONSIBLE FOR CONDUCTING SITE VISITS AND VERIFYING THAT THE PRACTICES ARE WORKING PROPERLY AND DETERMINE IF ADDITIONAL PRACTICES ARE NEEDED FOR BETTER SOIL AND EROSION AND SEDIMENT CONTROL. IF ADDITIONAL PRACTICES ARE DEEMED NECESSARY BY THE SWCD THE CONTRACTOR SHALL IMPLEMENT THE PRACTICES IN A TIMELY MANNER.

WHEN OPERATING UNDER AN ACOE PERMIT, A STAMPED AND SIGNED COPY OF THE APPROVED SOIL EROSION AND SEDIMENT CONTROL PLAN SHALL BE MAINTAINED ON THE SITE AT ALL TIMES AND BE PRESENTED WHEN REQUESTED BY THE SWCD, U.S. ARMY CORPS OF ENGINEERS OR ANY OTHER AUTHORIZED AGENCY.

TOPSOIL

SUITABLE TOPSOIL AS DESCRIBED IN SECTION 211 SHALL BE USED. ORGANIC CONTENT SHALL BE NOT LESS THAN 1.5% BY WEIGHT AND PH RANGE FROM 6.0-7.5.

IF TOPSOIL IS TO BE STOCKPILED AT THE SITE, A LOCATION SHALL BE SELECTED SO THAT IT WILL NOT ERODE, BLOCK DRAINAGE, OR INTERFERE WITH WORK ON THE SITE AND SHALL BE APPROVED BY THE ENGINEER. LOCATIONS SHALL BE DISCUSSED AND DETERMINED AT THE PRE-CONSTRUCTION CONFERENCE.

ALL STOCKPILES SHALL BE IMMEDIATELY PROTECTED WITH SILT FENCE/ PERIMETER BARRIER. TEMPORARY SEEDING OF STOCKPILES SHALL BE COMPLETED WITHIN 7 DAYS OF FORMATION OF STOCKPILE IF IT IS TO REMAIN UNDISTURBED FOR LONGER THAN 30 DAYS. PERMANENT SEEDING OF STOCKPILE SHALL BE COMPLETED WITHIN 7 DAYS OF FORMATION OF STOCKPILE IF IT IS TO REMAIN UNDISTURBED FOR MORE THAN 12 MONTHS.

ADDITIONAL TOPSOIL FROM OUTSIDE THE R.O.W. SHALL BE APPROVED BY THE ENGINEER PRIOR TO ITS USE PROVIDED THAT THE MATERIAL MEETS THE REQUIREMENTS DESCRIBED ABOVE FOR TOPSOIL.

TREE PROTECTION

THE CONTRACTOR SHALL USE EXTREME CAUTION NOT TO DISTURB ANY TREES WITHIN THE PARKWAY AREAS. ALL METHODS OF TREE PROTECTION SHALL BE APPROVED BY THE ENGINEER.

IF PROTECTIVE FENCE IS TO BE USED, THE FENCE SHALL BE LOCATED OUTSIDE THE DRIP LINE OF THE TREE TO BE SAVED AND IN NO CASE CLOSER THAN 5 FEET TO THE TRUNK OF ANY TREE.

FENCE POSTS SHALL BE EITHER STANDARD MINIMUM CROSS SECTIONAL AREA OF 3.0 SQ. STEEL POSTS OR WOOD POSTS.

THE FENCE MAY BE EITHER 40" HIGH SNOW FENCE, 40" PLASTIC WEB FENCING OR ANY OTHER MATERIAL AS APPROVED BY THE ENGINEER / INSPECTOR.

SODDING/ PERMANENT SEEDING

FERTILIZER NUTRIENTS SHALL BE APPLIED TO THE AREA ACCORDING TO THE IDOT STANDARD SPECIFICATIONS SECTION 250 FOR SEEDING AND SECTION 252 FOR SODDING.

PERMANENT SEEDING SHALL BE PLACED IN ACCORDANCE WITH SECTION 250.

SODDING SHALL BE PLACED IN ACCORDANCE WITH SECTION 252.

PRIOR TO SOD PLACEMENT, AREAS TO BE SODDED SHALL BE BROUGHT TO FINAL GRADE. ANY IRREGULARITIES IN SOIL SURFACE SHALL BE FILLED OR SHAPED TO PREVENT THE FORMATION OF DEPRESSIONS OR WATER POCKETS.

SOD SHALL BE HARVESTED, DELIVERED, AND INSTALLED WITHIN A PERIOD OF 48 HOURS.

AS SODDING OF DEFINED AREAS IS COMPLETED, SOD SHALL BE TAMPED OR ROLLED TO PROVIDE FIRM CONTACT BETWEEN ROOTS AND SOIL FILL ANY GAPS BETWEEN EDGES OR ENDS OF SOD MATS WITH GOOD SOIL AND ROLL.

AFTER ROLLING IS COMPLETE SOD SHALL BE IRRIGATED AT THE RATE THAT DOES NOT RESULT IN RUNOFF. SUPPLEMENTAL WATERING HAS BEEN PROVIDED IN THE EVENT OF PERIODS EXCEEDING 28 DEGREES CELSIUS (82 DEGREES FAHRENHEIT) OR SUBNORMAL RAINFALL.

TEMPORARY CONCRETE WASHOUT FACILITY

TEMPORARY CONCRETE WASHOUT FACILITIES SHALL BE MAINTAINED TO PROVIDE ADEQUATE HOLDING CAPACITY WITH A MINIMUM FREEBOARD OF 4 INCHES FOR ABOVE GRADE FACILITIES AND 12 INCHES FOR BELOW GRADE FACILITIES. MAINTAINING TEMPORARY CONCRETE WASHOUT FACILITIES SHALL INCLUDE REMOVING AND DISPOSING OF HARDENED CONCRETE OR SLURRY AND RETURNING THE FACILITIES TO A FUNCTIONAL CONDITION.

EXISTING FACILITIES MUST BE CLEANED OR NEW FACILITIES MUST BE CONSTRUCTED AND READY FOR USE ONCE THE WASHOUT IS TWO-THIRDS FULL.

TEMPORARY CONCRETE WASHOUT FACILITIES SHALL BE INSPECTED FOR DAMAGE (E.G. TEARS IN PLASTIC LINER, MISSING SAND BAGS, ETC.). DAMAGED FACILITIES SHALL BE REPAIRED PROMPTLY.

PERIMETER EROSION BARRIER / SILT FENCE

PERIMETER EROSION BARRIER/SILT FENCE SHALL BE INSTALLED AND FUNCTIONING PROPERLY PRIOR TO ANY EARTHWORK ACTIVITIES IN THE AREA TO BE PROTECTED. THEY SHALL BE MAINTAINED THROUGHOUT THE CONSTRUCTION PERIOD AND REMOVED IN CONJUNCTION WITH THE FINAL GRADING AND SITE STABILIZATION.

FABRIC FILTER MATERIAL SHALL MEET THE REQUIREMENTS OF SECTION 1080.02 MATERIAL STANDARD.

TEMPORARY DITCH CHECKS

DITCH CHECKS SHOULD BE PLACED AS SHOWN ON THE PLANS. ROLLED EXCELSIOR, TRIANGULAR GEOTEXTILE, OR STONE AGGREGATE MAY BE USED AS TEMPORARY DITCH CHECKS. SEE STANDARD DRAWING FOR DETAILS.

FOR STONE AGGREGATE DITCH CHECKS, FABRIC MATERIAL SHALL BE PLACED OVER THE CLEARED AREA PRIOR TO PLACING THE ROCK AND SHALL MEET THE REQUIREMENTS OF SECTION 1080.02.

FOR ADDED STABILITY, THE BASE OF ALL DITCH CHECK MAY BE KEYED 6 INCHES INTO THE SOIL.

STRAW BALES SHALL NOT BE USED AS TEMPORARY DITCH CHECKS IN COOK COUNTY PER SOIL WATER CONSERVATION DISTRICT REQUIREMENTS.

THE UNIT PRICE FOR TEMPORARY DITCH CHECKS INCLUDES THE COST OF REPLACEMENT DITCH CHECKS. WHEN A REPLACEMENT DITCH CHECK IS NEEDED AT ANY LOCATION CALLED FOR ON THE PLAN IT WILL NOT BE PAID FOR SEPARATELY.

THESE BMPS ARE TEMPORARY AND SHALL BE REMOVED WHEN THEY ARE NO LONGER REQUIRED OR WHEN PERMANENT MEASURES ARE INSTALLED.

EROSION CONTROL BLANKET

A QUANTITY OF EROSION CONTROL BLANKET HAS BEEN PROVIDED AND SHALL BE USED TO PROTECT ALL AREAS WITH SLOPES EQUAL TO OR GREATER THAN 3H:1V AND IN CRITICAL AREAS (I.E. DETENTION BASIN PERIMETERS, STREAM BANKS, BERMS, ETC.) IMMEDIATELY UPON FINAL GRADING UNTIL STABILIZED WITH SODDING.

TYPE OF BLANKET SHALL BE APPROVED BY THE ENGINEER AND INSTALLED AS DETAILED IN THE PLANS. THE USE OF EROSION CONTROL BLANKET CONTAINING *GREEN DYE IS NOT ACCEPTABLE* PER SOIL AND WATER CONSERVATION DISTRICT REQUIREMENTS.

THE BLANKET WILL BE IN FIRM CONTACT WITH THE SOIL. IT SHALL BE ANCHORED PER MANUFACTURER'S RECOMMENDATION WITH THE PROPER NUMBER AND SPACING OF WIRE STAPLES WHOSE LENGTH AND HEIGHT MEET MANUFACTURER'S RECOMMENDATION.

EROSION CONTROL BLANKET SHALL BE LOOSELY PLACED OVER GROUND SURFACE AND STAPLED. DO NOT STRETCH MATERIAL.

THE BLANKET WILL BE UNROLLED UPSTREAM TO DOWNSTREAM PARALLEL TO THE DIRECTION OF FLOW IN THE CHANNEL AND PERPENDICULAR TO THE FLOW ON THE SLOPES. THE UPSTREAM END OF EACH BLANKET SHALL BE ANCHORED IN A MINIMUM 6 INCH ANCHOR TRENCH. THESE BLANKETS WHEN LAID SIDE BY SIDE SHALL OVERLAP A MINIMUM OF 4 INCHES. BLANKETS SHALL OVERLAP 12 INCHES AT THE DOWNSTREAM ENDS.

INLET AND PIPE PROTECTION / INLET FILTERS

INLET AND PIPE PROTECTION AND INLET FILTERS SHALL BE INSTALLED AND FUNCTIONING PROPERLY PRIOR TO ANY EARTHWORK ACTIVITIES IN THE AREA TO BE PROTECTED. THEY SHALL BE MAINTAINED THROUGHOUT THE CONSTRUCTION PERIOD AND REMOVED IN CONJUNCTION WITH THE FINAL SITE STABILIZATION.

INLET FILTERS SHALL BE USED FOR ALL CATCH BASINS AS SHOWN ON THE PLANS AND AT ANY LOCATION DEEMED NECESSARY BY THE ENGINEER AND SHALL BE CLEANED IN ACCORDANCE WITH SPECIAL PROVISION FOR INLET FILTER CLEANING.

FABRIC DROP/SILT FENCE INLET PROTECTION SHALL BE USED FOR US FLARED END SECTIONS AND SHALL CONFORM TO THE DETAILS PROVIDED IN THE STANDARDS FOR INLET PIPE PROTECTION AND SILT FENCE.

THE STAKES SHOULD BE SPACED EVENLY AROUND THE PERIMETER OF THE INLET A MAXIMUM OF 3 FEET APART, AND SECURELY DRIVEN INTO THE GROUND APPROXIMATELY 18 INCHES DEEP.

THE SILT FENCE SHOULD BE BACKFILLED WITH CRUSHED STONE OR COMPACTED SOIL AS SHOWN ON THE DETAIL FOR SILT FENCE

SEDIMENT SHOULD BE REMOVED WHEN IT HAS ACCUMULATED TO ONE HALF THE HEIGHT OF THE INLET FILTER, INLET PIPE PROTECTION, OR DITCH CHECK AND WILL BE PAID FOR AS EARTH EXCAVATION FOR EROSION CONTROL.

BOX CULVERT INSTALLATION

THE CONTRACTOR SHALL PROVIDE TO THE ENGINEER SHOP DRAWINGS AND DESIGN CALCULATIONS OF COFFERDAMS FOR APPROVAL PRIOR TO BEGINNING OF CONSTRUCTION. SEE SPECIAL PROVISION - MAINTAINING DRAINAGE AND STREAM PROTECTION.

APPROPRIATE SOIL EROSION AND SEDIMENT CONTROL METHODS SHALL BE INSTALLED, MAINTAINED AND DOCUMENTED FOR EACH STEP OF THE BOX CULVERT INSTALLATION BY THE CONTRACTOR AND RESIDENT ENGINEER. AT A MINIMUM, THE WORK AREA NEEDS TO BE ISOLATED FROM ANY FLOWING WATER. SEE SPECIAL PROVISION - MAINTAINING DRAINAGE AND STREAM PROTECTION.

A SUMP PIT SHALL BE USED DURING DEWATERING OPERATIONS OF THE WORK AREA AS APPROVED BY SWCD AND SHALL BE DISCHARGED TO A SEDIMENT BASIN OR BAG OF ADEQUATE SIZE TO PROVIDE FOR SETTLEMENT PRIOR TO DISCHARGE TO DRAINAGE SYSTEM OR STREAM. SEE IL URBAN MANUAL PRACTICE STANDARD FOR DEWATERING - CODE 813.
WATER CAPTURED UPSTREAM OF THE COFFERDAM MAY BE DISCHARGED DIRECTLY BACK INTO THE DRAINAGE SYSTEM AS LONG AS NO SCOURING OCCURS FROM THE DISCHARGE OPERATION.

THE DISCHARGE OF WATER FROM DEWATERING OPERATIONS DIRECTLY INTO THE STREAM OR DRAINAGE SYSTEM IS STRICTLY PROHIBITED.

THE NORTH COOK COUNTY SOIL AND WATER CONSERVATION DISTRICT CAN BE CONTACTED AT (847) 408-0071, MONDAY-FRIDAY 8:00 AM - 4:30 PM OR BY FAX AT (847) 608-8302.

THE WILL SOUTH COOK COUNTY SOIL AND WATER CONSERVATION DISTRICT CAN BE CONTACTED AT (815) 462-3106, EXT.3, MONDAY-FRIDAY 8:00 AM - 4:30 PM OR BY FAX AT (815) 463-3176.

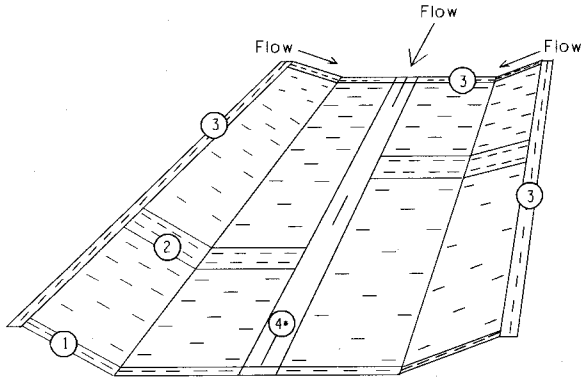

EROSION CONTROL BLANKET

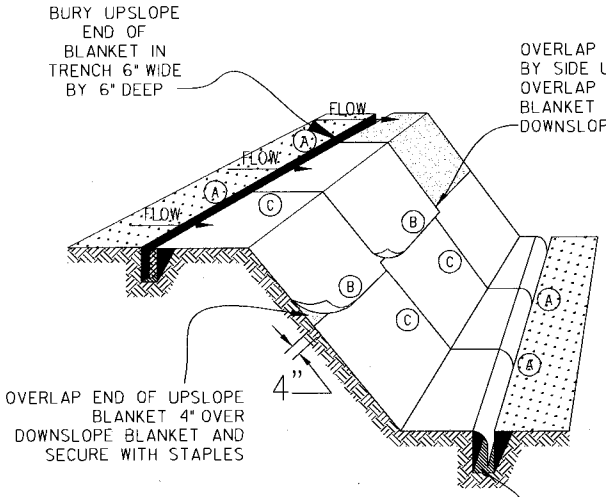

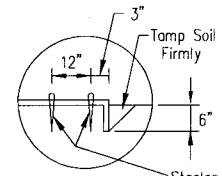

Anchor Slot
DETAIL A

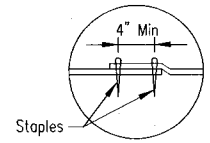

Single Joint
DETAIL B

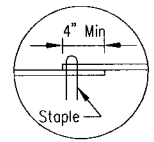

Parallel Overlaps
DETAIL C

DETAIL 1

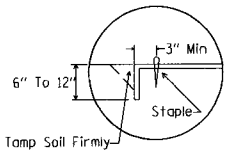

Terminal Fold
Erosion Control Blanket

DETAIL 2

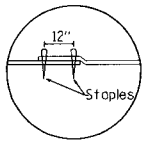

Junction Slot
Erosion Control Blanket

DETAIL 3

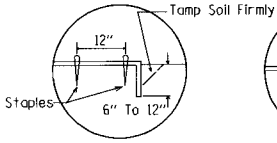

Anchor Slot
Erosion Control Blanket

DETAIL 4

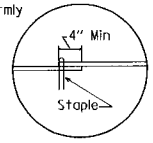

Lap Joint
Erosion Control Blanket

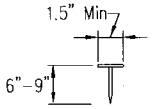

PUSH PIN DETAIL

STAPLE DETAIL

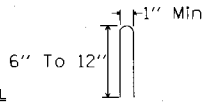

GENERAL NOTES

1. A QUANTITY OF EROSION CONTROL BLANKET HAS BEEN PROVIDED AND SHALL BE USED TO PROTECT ALL AREAS GRADED PRIOR TO LANDSCAPING AS DIRECTED BY THE ENGINEER.

2. EROSION CONTROL BLANKET MUST BE USED TO PROTECT ALL EXPOSED SOILS IF LANDSCAPE SEEDING/SODDING IS NOT PLACED WITHIN 24 HOURS OF COMPLETING THE GRADING AND SHAPING OF DITCHES WHERE SPECIFIED ON THE PLANS.

3. THE BLANKET WILL BE IN FIRM CONTACT WITH THE SOIL. IT SHALL BE ANCHORED PER MANUFACTURER'S RECOMMENDATION WITH PROPER NUMBER AND SPACING OF WIRE STAPLES WHOSE LENGTH AND HEIGHT MEET MANUFACTURER'S RECOMMENDATION.

4. EROSION CONTROL BLANKET SHALL BE LOOSELY PLACED OVER GROUND SURFACE AND STAPLED. DO NOT STRETCH MATERIAL.

5. TYPE OF BLANKET SHALL BE APPROVED BY THE ENGINEER AND INSTALLED AS DETAILED ABOVE.

6. STAPLE OR PUSH PIN LENGTHS SHALL BE SELECTED BASED ON SOIL TYPE AND CONDITIONS. (MINIMUM STAPLE LENGTH IS 6")

7. THE BLANKET WILL BE UNROLLED UPSTREAM TO DOWNSTREAM PARALLEL TO THE DIRECTION OF FLOW IN THE CHANNEL AND PERPENDICULAR TO THE FLOW ON SLOPES. THE UPSTREAM END OF EACH BLANKET WILL BE ANCHORED IN A MINIMUM 150 mm (6 IN) ANCHOR TRENCH. THESE BLANKETS WHEN LAID SIDE BY SIDE SHALL OVERLAP A MIN. OF 4 INCHES. BLANKETS SHALL OVERLAP 300mm (12 IN) AT THE DOWNSTREAM ENDS.

8. STAPLES SHALL BE PLACED IN A DIAMOND PATTERN AT 2 PER SQYD FOR STITCHED BLANKETS. NON-STITCHED SHALL USE 4 STAPLES PER SQYD OF MATERIAL. THIS EQUATES TO 200 STAPLES WITH STITCHED BLANKET AND 400 STAPLES WITH NON-STITCHED BLANKET PER 100 SQYD PF MATERIAL.

9. ALL ANCHOR SLOTS SHALL BE STAPLED AT APPROXIMATELY 12" INTERVALS.

10. HEAVY DUTY EROSION CONTROL BLANKET NEED NOT OVERLAP.

11. STAPLE PATTERN SHALL BE PER MANUFACTURER'S RECOMMENDATION.

REVISION	
DATE	COMMENT
04-06-12 - MK	REF: IUM-530

VARIOUS LOCATIONS	COUNTY HIGHWAY: VARIOUS	FISCAL YEAR: 2015	SECTION: 14-PRRPS-01-PV

COUNTY OF COOK
DEPARTMENT OF TRANSPORTATION AND HIGHWAYS

COMPUTED: MK
DRAWN: MK
CHECKED: KLP

REVISIONS | DATE

DRAINAGE EROSION CONTROL BLANKET STANDARD E-11

PROJECT NAME

DU-11

SCALE: NONE SHEET

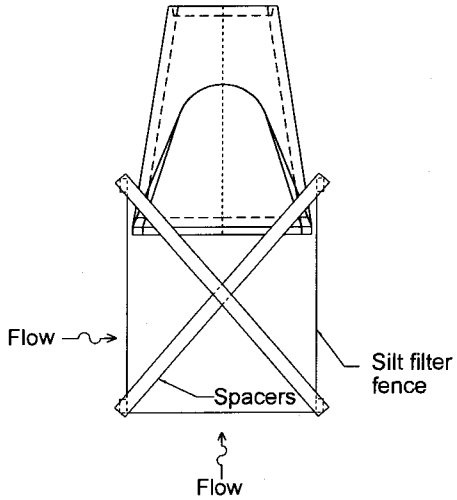

FILTER FABRIC INLET PROTECTION FOR FLARED END SECTION

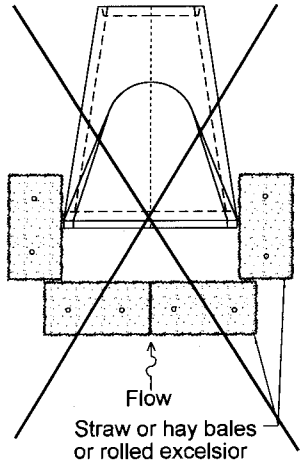

STRAWBALES SHALL NOT BE USED

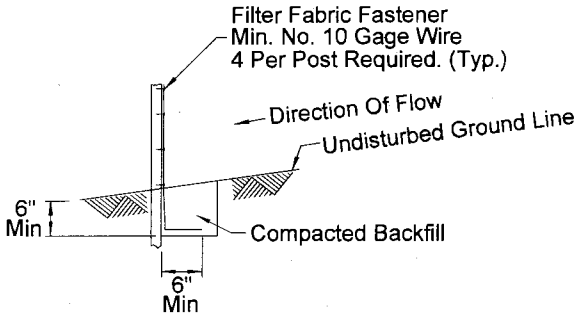

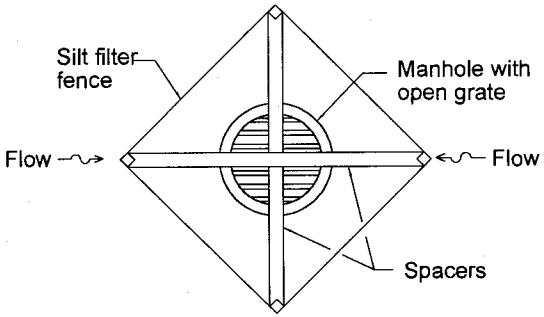

INLET AND PIPE PROTECTION

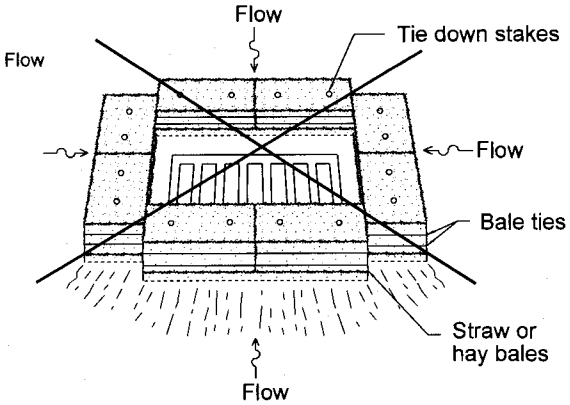

STRAWBALES SHALL NOT BE USED

REVISION	
DATE	COMMENT
1-29-99 - MK	REF: IUM STANDARD IL-506SF
1-29-99 - MK	REF: IDOT STANDARD 280001-06

VARIOUS LOCATIONS	COUNTY HIGHWAY: VARIOUS	FISCAL YEAR: 2015	SECTION: 14-PPRPS-01-PV	COUNTY OF COOK DEPARTMENT OF TRANSPORTATION AND HIGHWAYS	COMPUTED: MK DRAWN: MK CHECKED: KLP	REVISIONS / DATE	PROJECT NAME: DRAINAGE INLET PROTECTION WITH SILT FENCE STANDARD E-15	DU-12 SCALE: NONE SHEET

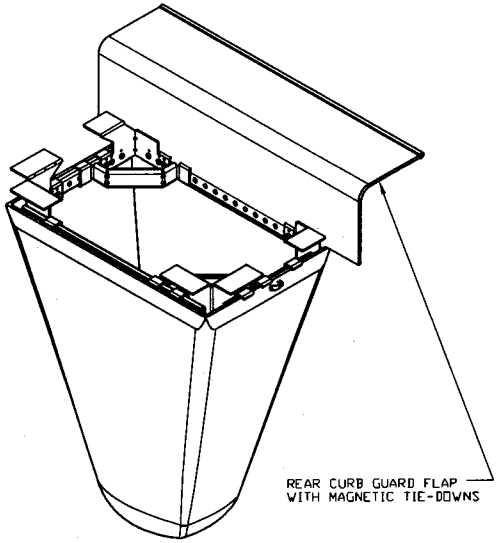

TYPICAL CURB BOX
INLET FILTER

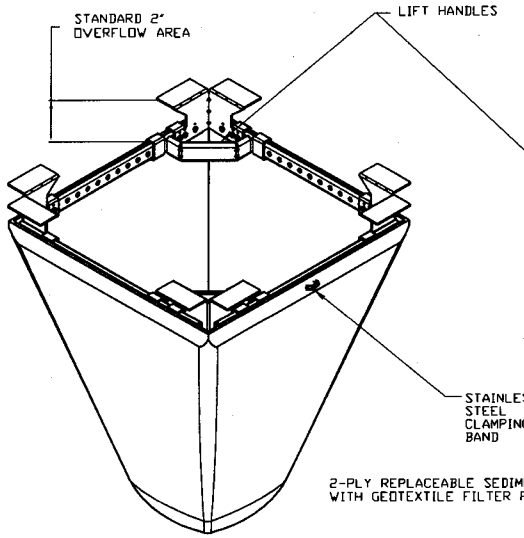

TYPICAL FLAT/RECTANGULAR/ROLLED CURB
INLET FILTER

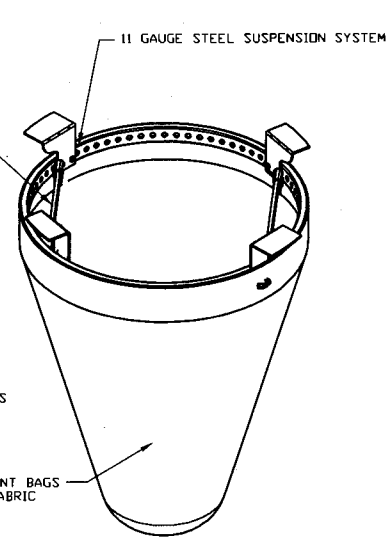

TYPICAL ROUND
INLET FILTER

IDOT Inlet Filter Specifications		
Material Property	***Test Method***	***Value (min ave)***
> NonWoven Geotextile Inner Filter Bag Specs (2 ft^3 min vol)		
Grab Tensile	ASTM D 4632	100 lbs
Puncture Strength	ASTM D 4833	65lbs
Trapezoidal Tear	ASTM D 4533	45 lbs
UV Resistance	ASTM D 4355	70% at 500 hrs
App Open Size (AOS)	ASTM D 4751	70 sieve (.212 mm)
Permittivity	ASTM D 4491	2.0/sec
Water Flow Rate	ASTM D 4491	145 gpm/sqft
> Polyester Outer Reinforcement Bag Specifications		
Weight	ASTM D 3776	4.55 oz/sqyd +/- 15%
Thickness	ASTM D 1777	.040 +/- .005
> Frame Construction		
A36 Structural Steel; 11 Guage; Zinc Plated	ASTM A 576	*Tensile Strength > 58,000 psi; Yield Strength > 36,000 psi*

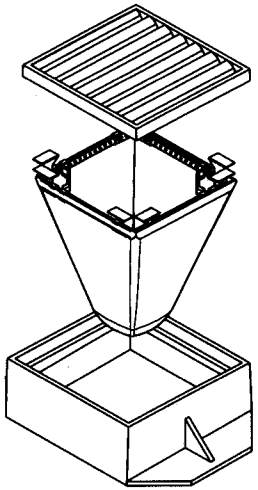

INSTALLATION:

1. REMOVE GRATE
2. DROP FLEXSTORM INLET FILTER ONTO LOAD BEARING LIP OF CASTING OR CONCRETE STRUCTURE
3. REPLACE GRATE

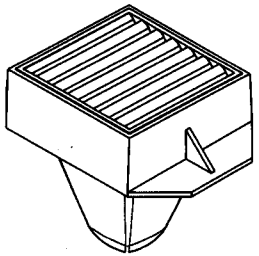

REVISION	
DATE	COMMENT
04-05-12 - MK	
02-10-14 - JM	

VARIOUS LOCATIONS	COUNTY HIGHWAY: VARIOUS FISCAL YEAR: 2015 SECTION: 14-PRRPS-01-PV	COUNTY OF COOK DEPARTMENT OF TRANSPORTATION AND HIGHWAYS	COMPUTED: MK DRAWN: MK CHECKED: KLP	REVISIONS / DATE	PROJECT NAME DRAINAGE INLET FILTER STANDARD E-16	DU-13 SCALE: NONE SHEET

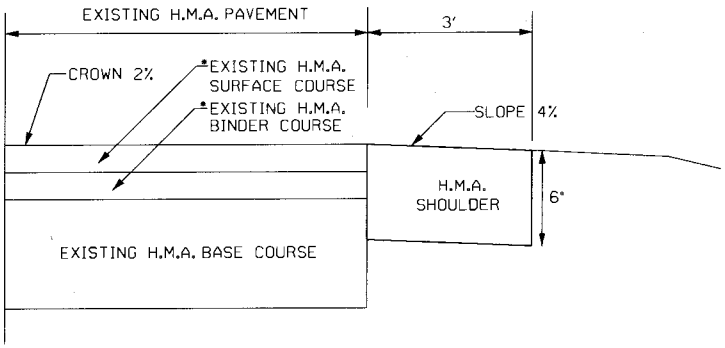

TYPICAL HOT-MIX ASPHALT SHOULDER

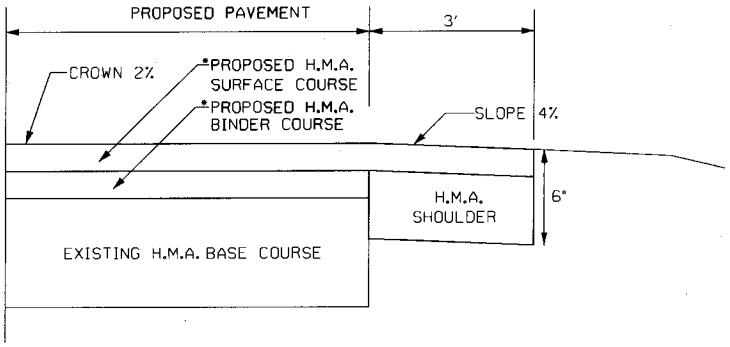

TYPICAL HOT-MIX ASPHALT SHOULDER

(CONSTRUCTED SIMULTANEOUSLY WITH PAVEMENT RESURFACING)

NOTES:

THE METHOD OF COMPACTION SHALL BE SUBMITTED TO AND APPROVED BY THE ENGINEER.

AS DIRECTED BY THE ENGINEER, THE CONTRACTOR SHALL PROTECT THE SHOULDER AREA WITH SUITABLE SAFETY DEVICES AS WORK PROGRESSED TO PREVENT VEHICULAR USE UNTIL THE AREA HAS COOLED SUFFICENTLY TO PREVENT DEFORMATION OF THE SHOULDER SLOPE.

THE MATERIAL NECESSARY FOR THE SHOULDER AREA CONSTRUCTION SHALL BE INCLUDED IN THE CONTRACT UNIT PRICE PER TON FOR HOT-MIX ASPHALT SHOULDER AND, WHEN CONSTRUCTED SIMULTANEOUSLY WITH THE SURFACE COURSE, HOT-MIX ASPHALT SURFACE COURSE, MIX "D" WITH THE COMPACTION AND SAFETY DEVICES BEING PAID FOR PER TON OF HOT-MIX ASPHALT SURFACE COURSE, MIX "D" WHICH SHALL INCLUDE THE AREA OF HOT-MIX ASPHALT SHOULDER ONLY.

A SEPARATE TANDEM ROLLER MAY BE USED IN THE CONSTRUCTION OF THE HOT-MIX ASPHALT SHOULDER.

VARIOUS LOCATIONS	COUNTY HIGHWAY: VARIOUS FISCAL YEAR: 2015 SECTION: 14-PPRPS-01-PV	COUNTY OF COOK DEPARTMENT OF TRANSPORTATION AND HIGHWAYS	COMPUTED: A.L.B. DRAWN: A.L.B. CHECKED: H.P.S.	REVISIONS NEW DETAIL ADDED, NOTES REVISED REVISED BORDER	DATE 02-05-14 01-28-14	PROJECT NAME CIVIL DIVISION HOT-MIX ASPHALT SHOULDER DETAIL STANDARDS P-2	C-1 NOT TO SCALE SHEET

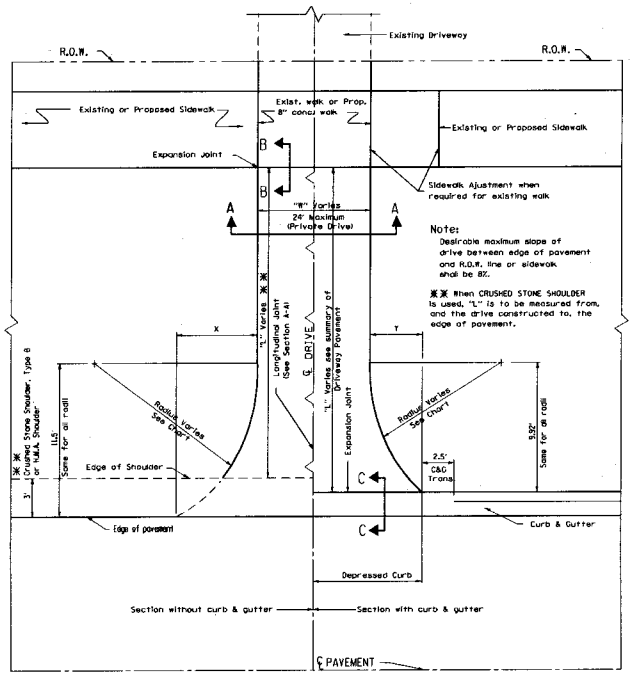

DETAIL OF PRIVATE DRIVE

SUMMARY OF DRIVEWAY PAVEMENT									
STATION	"L"	"W"	SQ. YDS. P.C.C. DRIVEWAY PAVEMENT	SQ. YDS. H.M.A. DRIVEWAY PAVEMENT	STATION	"L"	"W"	SQ. YDS. P.C.C. DRIVEWAY PAVEMENT	SQ. YDS. H.M.A. DRIVEWAY PAVEMENT

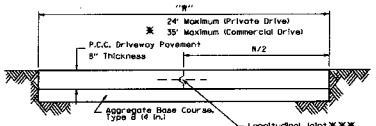

SECTION A-A P.C.C. DRIVEWAY

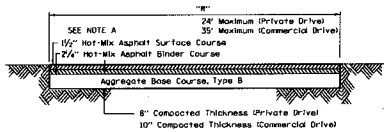

SECTION A-A HOT-MIX ASPHALT DRIVEWAY

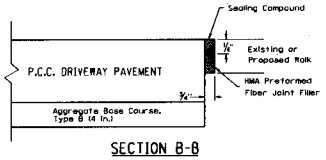

SECTION B-B

The Expansion Joint shall be included in the contract unit price per square foot for Portland Cement Concrete Sidewalk or per square yard for P.C. Concrete Drive.

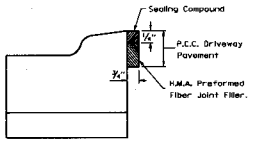

SECTION C-C

GUIDE FOR DRIVEWAY LENGTH

1. Meet existing walk (use joint for P.C.C. pavement sec. B-B).
2. If there is no existing or proposed walk-extend to R.O.W. line.
3. If there is no existing walk but a proposed walk is required, construct 8" walk for full driveway width (Sec. B-B).
4. If there is a walk adjustment, construct 8" walk for full driveway width and 5' walk beyond.

Quantities shall be computed on the basis of the drives extending to sidewalk or R.O.W. line as shown on the plans. However, it shall be the responsibility of the field engineer to determine the actual limits in each instance.

CHART

FOR DRIVEWAY WIDTH - "W" *	USE RADIUS	X	Y
12'	14'	6.0'	4.2'
14'-16'	16'	4.9'	3.4'
17'-18'	18.5'	4.0'	2.9'
Over 18'	22.5'	3.2'	2.3'

* PRIVATE DRIVES: 12' MINIMUM, 24' MAXIMUM
COMMERCIAL DRIVES: 12' MINIMUM, 24' MAXIMUM FOR 1-WAY OPERATION
24' MINIMUM, 35' MAXIMUM FOR 2-WAY OPERATION

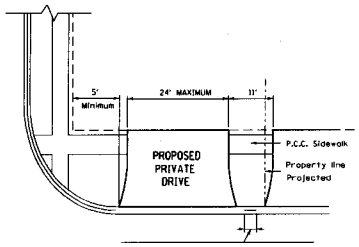

Desirable distance of full curb height between adjacent drives shall be six (6) feet. It is desirable that the drive returns terminate within the property line as projected.

LIMITATIONS UPON PRIVATE DRIVES

AT STREET INTERSECTIONS
MAXIMUM WIDTH & MINIMUM DISTANCE BETWEEN DRIVES

NOTE A

For H.M.A. driveways: as an alternate to the 1 1/2" Hot-Mix Asphalt Surface Course, Mix "D", IL-12.5 or 9.5, N70, and the 2 1/4" Hot-Mix Asphalt Concrete Binder Course, IL-19, N70 3 3/4" Hot-Mix Asphalt Surface Course, Mix "D", IL-12.5 or 9.5 N70 may be used. In the event the Contractor elects to use this alternate, the additional 2 1/4" of Hot-Mix Asphalt Surface Course, Mix "D", IL-12.5 or 9.5 N70 shall be paid for at the contract unit price for Hot-Mix Asphalt Binder Course, IL-19, N70.

VARIOUS LOCATIONS	COUNTY HIGHWAY:	VARIOUS	COUNTY OF COOK DEPARTMENT OF TRANSPORTATION AND HIGHWAYS	COMPUTED: A.L.B. DRAWN: A.L.B. CHECKED: H.P.S.	REVISIONS	DATE	PROJECT NAME	C-2
	FISCAL YEAR:	2015			DRIVEWAY WIDTH LIMITATIONS	02-06-14	CIVIL DIVISION PRIVATE AND COMMERCIAL DRIVE DETAIL STANDARDS P-6	NOT TO SCALE SHEET
	SECTION:	14-PPRPS-01-PV			REVISED BORDER	01-27-14		
					HOT-MIX ASPHALT	02-28-07		
					AGGTREGATE BASE	01-19-06		

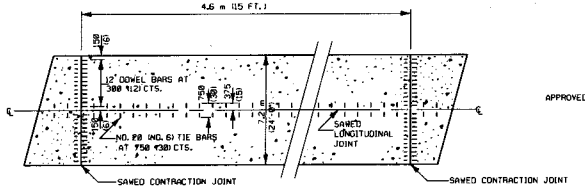

P.C. CONCRETE PAVEMENT DETAIL

SEE I.D.O.T. STANDARDS 420001 AND 420701 FOR ADDITIONAL DETAILS

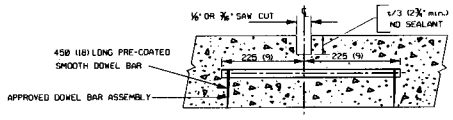

CONTRACTION JOINT DETAIL

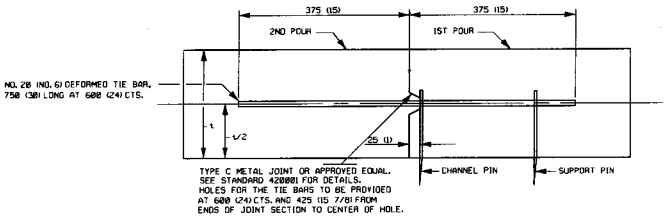

TYPE C METAL JOINT OR APPROVED EQUAL. SEE STANDARD 420001 FOR DETAILS. HOLES FOR THE TIE BARS TO BE PROVIDED AT 600 (24) CTS. AND 425 (15 7/8) FROM ENDS OF JOINT SECTION TO CENTER OF HOLE.

LONGITUDINAL CONSTRUCTION JOINT DETAIL

TYPE A - INSTALL TIE BARS
TYPE B - OMIT TIE BARS

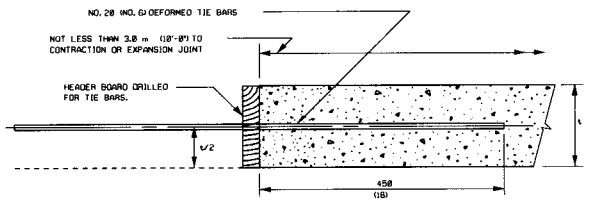

TRANSVERSE CONSTRUCTION JOINT DETAIL

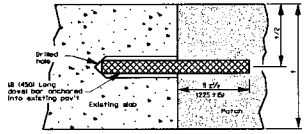

TRANSVERSE JOINT DETAIL

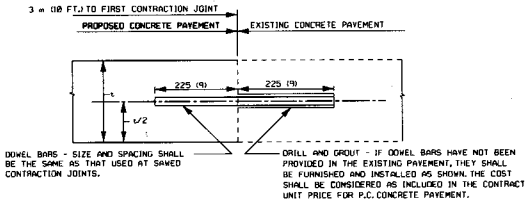

JOINT DETAIL AT CONTRACT TERMINAL(S)

NOTE:
THE INTENT OF THIS STANDARD IS TO REFLECT ADDITIONS OR VARIATIONS TO I.D.O.T. STANDARDS CONTAINED IN THE PLANS.

THIS STANDARD SHALL GOVERN OVER THE I.D.O.T. STANDARDS.

NOTES (SUPPLEMENTAL TO I.D.O.T. STANDARDS)

STANDARDS 606101, 606201 AND 606006 - TYPE A GUTTER, TYPE B GUTTER AND OUTLET FOR CURB AND GUTTER

TIE BARS SHALL BE NO. 20 (NO. 6) SPACED AT 600 mm (24 IN.) CENTERS.

CONCRETE INLETS, ENTRANCES AND OUTLETS FOR GUTTER OR COMBINATION CURB AND GUTTER SHALL BE PAID FOR AT THE CONTRACT UNIT PRICE PER METER (FOOT) FOR THE PARTICULAR TYPE OF GUTTER OR COMBINATION CURB AND GUTTER SPECIFIED.

STANDARD 606001 - CURB AND COMBINATION CURB AND GUTTER

VARIABLE CURB TABLE

TYPE	A	B	C	D	R
B-V.30 (B-V.12)	300 (12)	50 (2)	125 (5)	VARIES	25 (1)
B-V.45 (B-V.18)	450 (18)	50 (2)	125 (5)	VARIES	25 (1)
B-V.60 (B-V.24)	600 (24)	50 (2)	125 (5)	VARIES	25 (1)

VARIABLE CURB AND GUTTER SHALL BE CONSTRUCTED WITH THE HEIGHT OF CURB VARYING BETWEEN 100 mm (4 IN.) AND 225 mm (9 IN.), AS REQUIRED. THE TOP OF CURB ELEVATION SHALL BE DETERMINED BY THE ENGINEER.

LONGITUDINAL JOINT TIE BARS SHALL BE NO. 20 (NO. 6) SPACED AT 600mm (24 IN.) CENTERS. AT THE CONTRACTOR'S OPTION, TIE BARS MAY BE BENT AT RIGHT ANGLES AGAINST THE EDGE OF THE CONCRETE PAVEMENT AND STRAIGHTENED INTO FINAL POSITION BEFORE THE CURB AND GUTTER IS PLACED, SUBJECT TO THE APPROVAL OF THE ENGINEER.

WHERE EXISTING CURB AND GUTTER IS TO BE REMOVED AND REPLACED ADJACENT TO EXISTING CONCRETE PAVEMENT REMAINING IN PLACE, THE CONTRACTOR SHALL PERFORM THE REMOVAL SO THAT THE EXISTING TIE BARS CAN BE USED IN TYING THE NEW CURB AND GUTTER TO THE EXISTING PAVEMENT. ANY TIE BARS WHICH ARE DAMAGED OR MISSING SHALL BE REPLACED WITH NO. 20 (NO. 6) TIE BARS, 600 mm (24 INCHES) LONG, EMBEDDED 200 mm (8 INCHES) AT 600 mm (24 INCH) CENTERS IN ACCORDANCE WITH THE ARTICLE 420.05 (B) OF THE STANDARD SPECIFICATIONS. THE COST OF FURNISHING AND INSTALLING THE TIE BARS SHALL BE CONSIDERED AS INCLUDED IN THE CONTRACT UNIT PRICE FOR THE PARTICULAR TYPE OF CURB AND GUTTER SPECIFIED.

THE DEPTH OF THE CURB OR COMBINATION CURB AND GUTTER SHALL BE EQUIVALENT TO THE DEPTH OF THE ADJACENT PAVEMENT, REGARDLESS OF PAVEMENT COMPOSITION.

STANDARD 353001 - PCC BASE WITH HOT MIX ASPHALT BINDER AND SURFACE COURSE

TIE BARS SHALL BE NO. 20 (NO. 6) SPACED AT 750 mm (30 IN.) CENTERS.

STANDARD 420001 - PAVEMENT JOINTS

JOINTS AND REINFORCEMENT BARS SHALL BE PLACED IN ACCORDANCE WITH THE P.C. CONCRETE PAVEMENT DETAIL SHOWN ON THIS SHEET.

LONGITUDINAL CONSTRUCTION JOINTS SHALL BE CONSTRUCTED IN ACCORDANCE WITH THE DETAIL SHOWN ON THIS SHEET. AT THE CONTRACTOR'S OPTION, TIE BARS MAY BE BENT AT RIGHT ANGLES AGAINST THE TYPE C METAL JOINT AND STRAIGHTENED INTO FINAL POSITION BEFORE THE ADJACENT CONCRETE PAVEMENT POUR, SUBJECT TO THE APPROVAL OF THE ENGINEER.

TIE BARS SHALL BE NO. 20 (NO. 6).

TRANSVERSE SAWED CONTRACTION JOINTS, TRANSVERSE CONSTRUCTION JOINTS AND JOINTS AT CONTRACT TERMINALS SHALL BE CONSTRUCTED IN ACCORDANCE WITH THE DETAILS SHOWN ON THIS SHEET.

STANDARD 442101 - CLASS B PATCHES

IF A SAWED LONGITUDINAL JOINT IS REQUIRED, TIE BARS SHALL BE NO. 20 (NO. 6) SPACED AT 750 mm (30 IN.) CENTERS.

STANDARD 442201 - CLASS C AND D PATCHES

CLASS C PATCHES SHALL BE TIED TO THE EXISTING PAVEMENT ALONG ALL SIDES OF THE PATCH WITH NO. 20 (NO. 6) TIE BARS, 600 mm (24 INCHES) LONG, EMBEDDED 200 mm (8 INCHES) AT 600 mm (24 INCH) CENTERS IN ACCORDANCE WITH ARTICLE 420.05 (B) OF THE STANDARD SPECIFICATIONS, MINIMUM 3 BARS ON EACH SIDE. THE COST OF FURNISHING AND INSTALLING THE TIE BARS SHALL BE CONSIDERED AS INCLUDED IN THE CONTRACT UNIT PRICE FOR CLASS C PATCHES.

ALL GUARDRAIL AND TRAFFIC BARRIER TERMINAL STANDARDS

HOT-MIX ASPHALT SHOULDERS 150 mm (6 IN.), SHALL BE PLACED UNDERNEATH THE ENTIRE LENGTH OF ALL PROPOSED GUARDRAIL AND TRAFFIC BARRIER TERMINALS AND EXTEND 0.6 m (2 FT.) BEYOND THE TERMINAL ENDS. THE WIDTH OF THE SHOULDER SHALL EXTEND ONE FOOT BEYOND EITHER SIDE OF THE POSTS FOR THE GUARDRAIL AND TRAFFIC BARRIER TERMINALS AND AS SHOWN ON THE PLANS. EARTH EXCAVATION NECESSARY FOR PLACEMENT OF THE SHOULDER SHALL BE CONSIDERED AS INCLUDED IN THE CONTRACT UNIT PRICE FOR HOT-MIX ASPHALT SHOULDERS, 6 IN.

DETAIL NOTES

SEE I.D.O.T. STANDARDS FOR DETAILS NOT SHOWN.

ALL DIMENSIONS ARE IN MILLIMETERS (INCHES) UNLESS OTHERWISE SHOWN.

ALL TIE BAR SIZES ARE METRIC (STANDARD)

t = PAVEMENT THICKNESS

STANDARD P-7

VARIOUS LOCATIONS	COUNTY HIGHWAY:	VARIOUS	COUNTY OF COOK DEPARTMENT OF TRANSPORTATION AND HIGHWAYS	COMPUTED: A.L.B. DRAWN: A.L.B. CHECKED: H.P.S.	REVISIONS	DATE	PROJECT NAME	C-3
	FISCAL YEAR:	2015			REVISED BORDER	01-27-14	CONSTRUCTION OF PAVEMENT & PAVEMENT APPURTENANCES (SUPPLEMENTAL TO I.D.O.T. STANDARDS) DETAILS & NOTES	NOT TO SCALE SHEET
	SECTION:	14-PPRPS-01-PV			TRANSVERSE JOINT DETAIL	04-01-13		
					TIE BAR SIZE AND SPACING, GUARDRAIL SHOULDER TYPE	12-01-12		

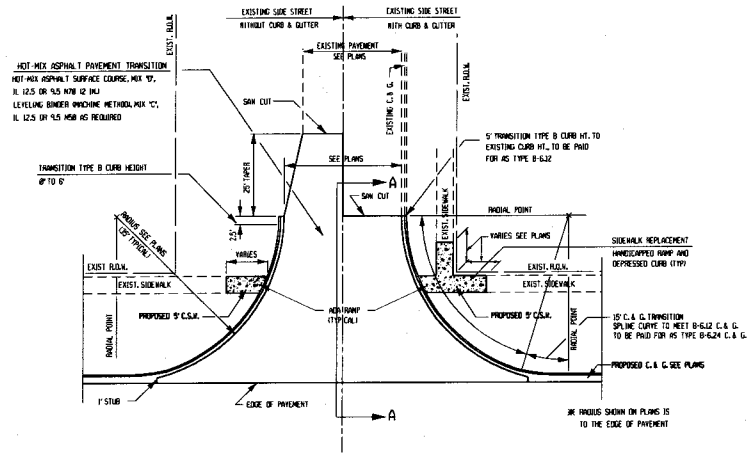

DETAIL-INTERSECTING STREETS AND C. & G. TRANSITIONS

(TYPICAL)

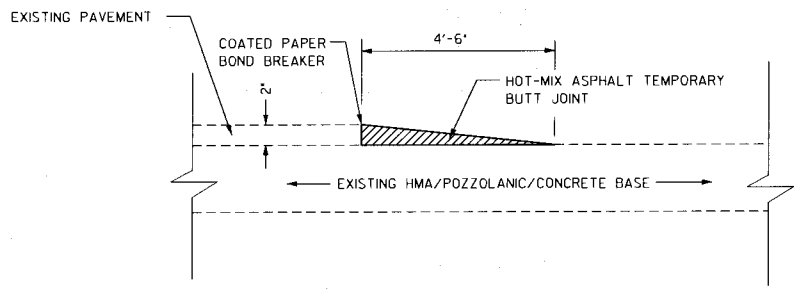

TEMPORARY BUTT JOINT

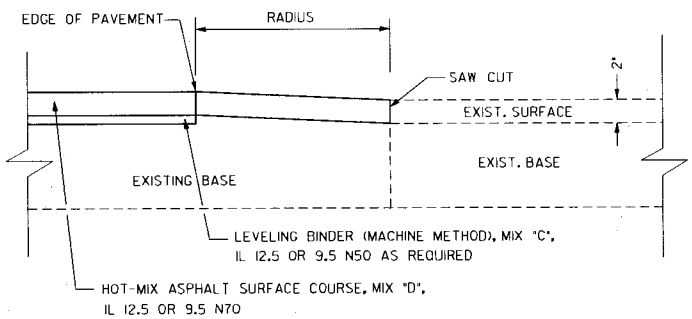

SECTION A-A STREET RETURNS

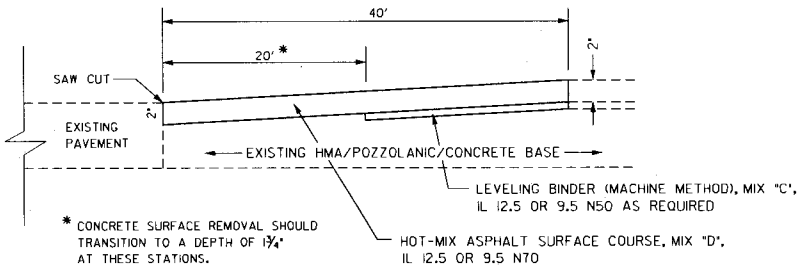

LONGITUDINAL SECTIONS

NOTES

ALL DIMENSIONS ARE INCHES UNLESS OTHERWISE NOTED. REFER TO PLANS AND TYPICAL CROSS SECTION FOR SPECIFIC THICKNESS OF ALL PAVEMENTS.

STANDARD P-8

VARIOUS LOCATIONS	COUNTY HIGHWAY: VARIOUS	FISCAL YEAR: 2015	SECTION: 14-PPRPS-01-PV	**COUNTY OF COOK** DEPARTMENT OF TRANSPORTATION AND HIGHWAYS	COMPUTED: A.L.B. DRAWN: A.L.B. CHECKED: H.P.S.	REVISIONS: REVISED NOTES AND DETAILS; REVISED BORDER	DATE: 02-06-14; 01-27-14	PROJECT NAME: INTERSECTING STREET AND C. & G. TRANSITION, TEMPORARY BUTT JOINT AND LONGITUDINAL SECTION DETAILS	C-4 NOT TO SCALE SHEET

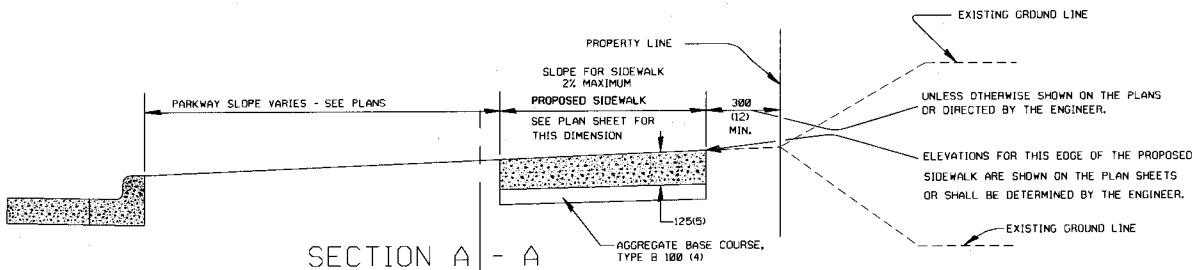

SECTION A - A

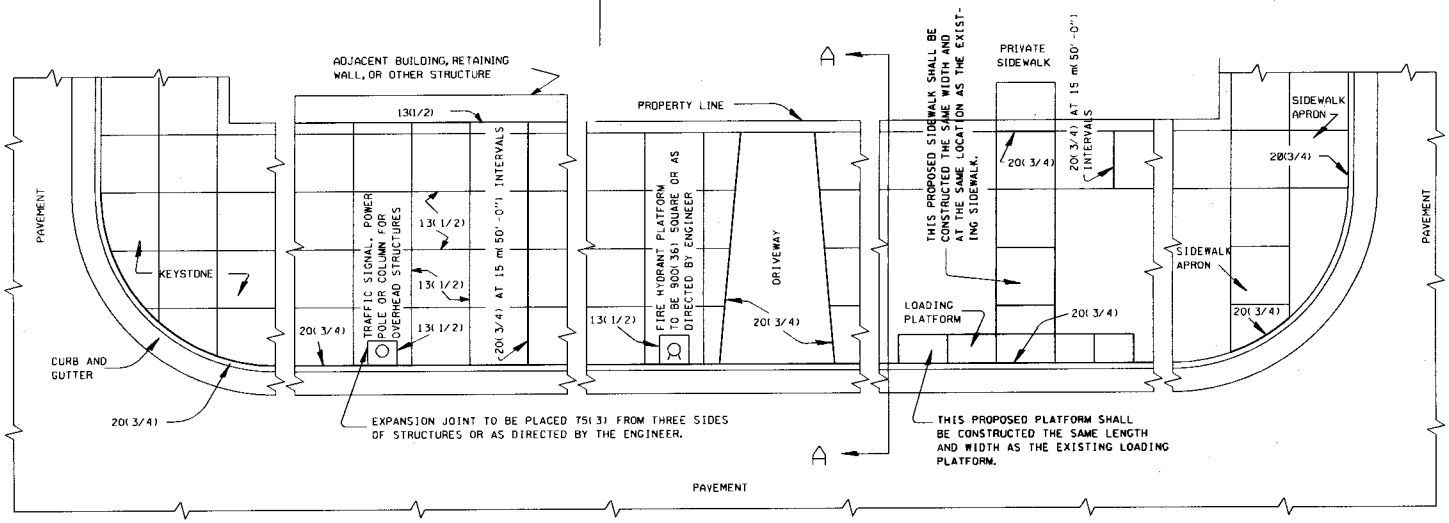

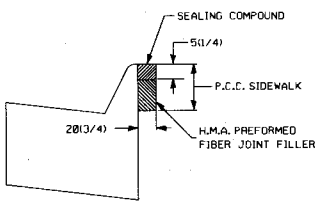

EXPANSION JOINT DETAIL

NOTES:
ALL DIMENSIONS ARE MILLIMETERS (INCHES)
UNLESS OTHERWISE SHOWN.

All Expansion Joints shall conform to the requirements of Section 424.07 of the Standard Specifications for Road and Bridge Construction and shall be included in the contract unit price per Square Meter (foot) for P.C. Concrete Sidewalk of the thickness specified.

VARIOUS LOCATIONS	COUNTY HIGHWAY: VARIOUS	COUNTY OF COOK	COMPUTED: A.L.B.	REVISIONS	DATE	PROJECT NAME	C-5
	FISCAL YEAR: 2015	DEPARTMENT OF TRANSPORTATION AND HIGHWAYS	DRAWN: XXX	REVISED BORDER	01-27-14	CIVIL DIVISION PORTLAND CEMENT CONCRETE SIDEWALK CONSTRUCTION DETAIL STANDARD P-10	NOT TO SCALE SHEET
	SECTION: 14-PPRPS-01-PV		CHECKED: A.L.B.				

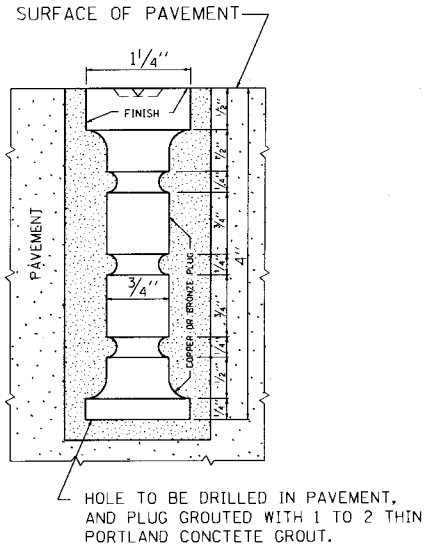

DETAIL FOR PLACING MONUMENT IN PAVEMENT

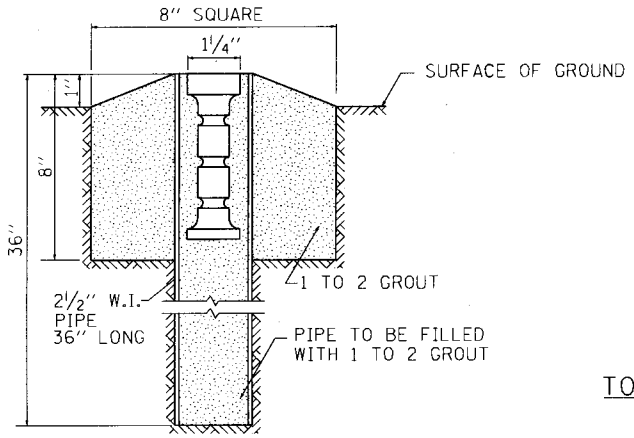

DETAIL FOR PLACING MONUMENT WHEN
LOCATED OUTSIDE OF PAVEMENT

TOP OF MONUMENT

NOT TO SCALE

VARIOUS LOCATIONS	COUNTY HIGHWAY: VARIOUS FISCAL YEAR: 2015 SECTION: 14-PPRPS-01-PV	COUNTY OF COOK DEPARTMENT OF TRANSPORTATION AND HIGHWAYS	COMPUTED: A.L.B. DRAWN: A.L.B. CHECKED: H.P.S.	REVISIONS REVISED BORDER	DATE 01-27-14	PROJECT NAME CIVIL DIVISION SURVEY MONUMENT DETAIL STANDARDS P-12	C-6 NOT TO SCALE SHEET

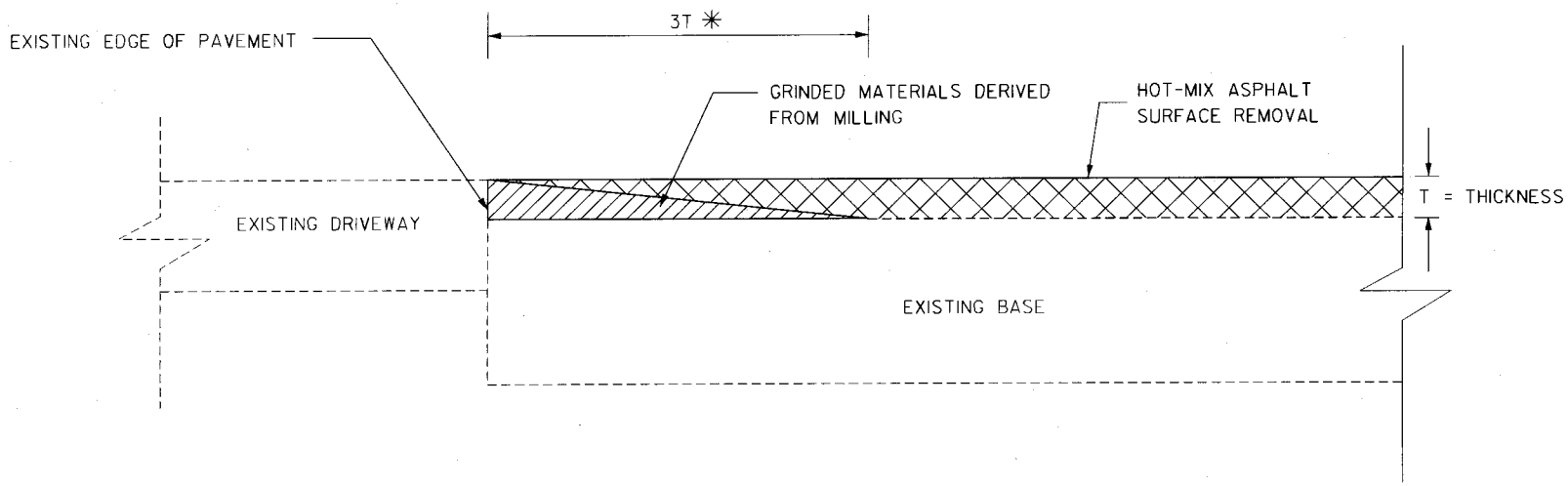

TEMPORARY RAMP AT DRIVEWAY

DURING HOT-MIX ASPHALT SURFACE REMOVAL

VARIOUS LOCATIONS	COUNTY HIGHWAY: VARIOUS FISCAL YEAR: 2015 SECTION: 14-PPRPS-01-PV	COUNTY OF COOK DEPARTMENT OF TRANSPORTATION AND HIGHWAYS	COMPUTED: A.L.B. DRAWN: A.L.B. CHECKED: H.P.S.	REVISIONS REVISED BORDER	DATE 01-27-14	PROJECT NAME CIVIL DIVISION TEMPORARY RAMP AT DRIVEWAY DETAIL STANDARDS R-13	C-7 NOT TO SCALE SHEET

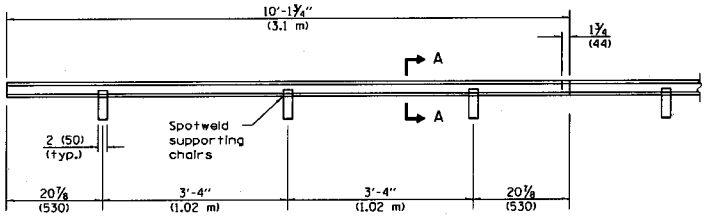

TYPE C METAL JOINT

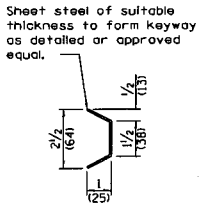

SECTION A–A

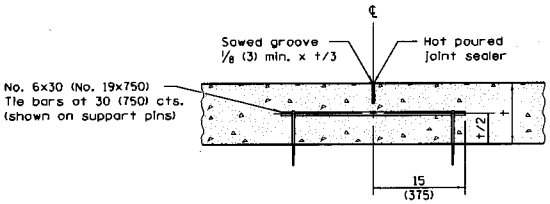

LONGITUDINAL SAWED JOINT

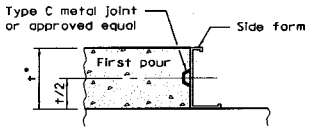

LONGITUDINAL KEYED JOINT

* 8 (203) min. pavement thickness for keyed joints.

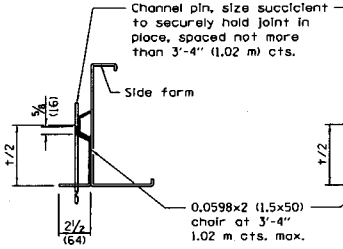

SUPPORTING CHAIR ALTERNATE

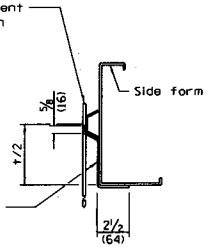

SUPPORTING CHAIR ALTERNATE

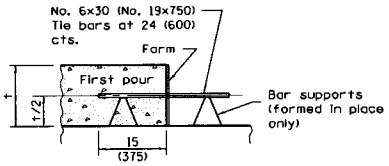

LONGITUDINAL CONSTRUCTION JOINT
(TIE BAR FORMED IN PLACE OR MECHANICALLY INSERTED)

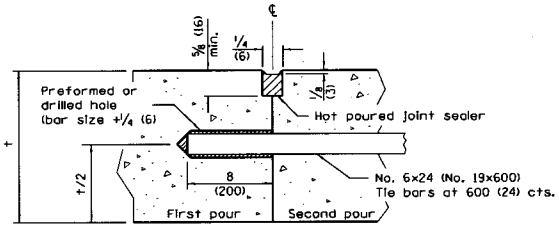

LONGITUDINAL CONSTRUCTION JOINT
(TIE BAR GROUTED IN PLACE)

GENERAL NOTES

All slope ratios are expressed as units of vertical displacement to units of horizontal displacement (V:H).

All dimensions are in inches (millimeters) unless otherwise shown.

PAVEMENT JOINTS

(Sheet 1 of 2)

STANDARD 420001–08

VARIOUS LOCATIONS	COUNTY HIGHWAY: VARIOUS	COUNTY OF COOK DEPARTMENT OF TRANSPORTATION AND HIGHWAYS	COMPUTED: KLP DRAWN: KLP CHECKED: HPS	REVISIONS	DATE MM/DD/YR	PROJECT NAME – PROJECT LIMITS	C-8
	FISCAL YEAR: 2015					STANDARDS	SCALE: NONE SHEET
	SECTION: 14-PPRPS_01-PV						

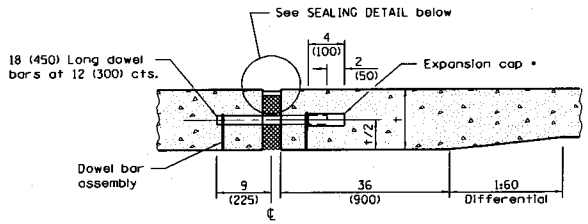

TRANSVERSE EXPANSION JOINT
(FOR PAVEMENTS WITH UNEQUAL THICKNESS)

• Expansion caps shall be installed on the exposed end of each dowel bar once the header has been removed and the joint filler material has been installed.

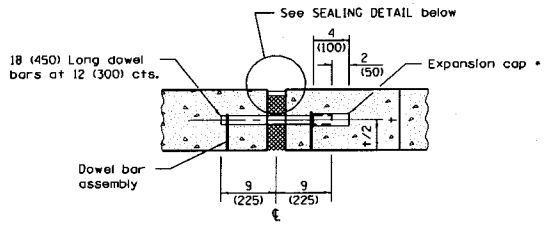

TRANSVERSE EXPANSION JOINT
(FOR PAVEMENTS WITH EQUAL THICKNESS)

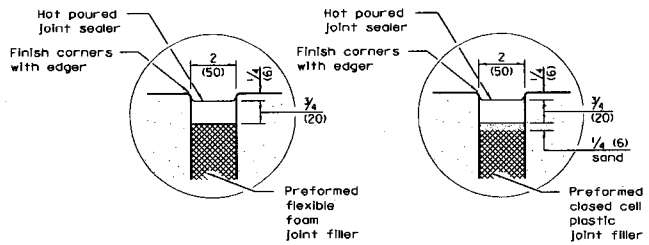

SEALING DETAIL

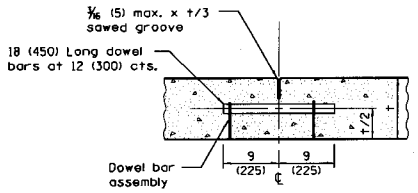

TRANSVERSE CONTRACTION JOINT

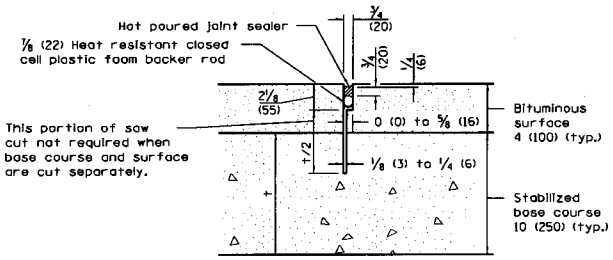

TRANSVERSE CONTRACTION JOINT
(FOR CAM, CFA AND LFA BASE COURSE MIXTURES)

DOWEL BAR TABLE	
PAVEMENT THICKNESS	DOWEL BAR DIAMETER
8 (200) or greater	1 1/2 (38)
7 (175) thru 7.99 (199)	1 1/4 (32)
Less than 7 (175)	1 (25)

PAVEMENT JOINTS

(Sheet 2 of 2)

STANDARD 420001-08

VARIOUS LOCATIONS	COUNTY HIGHWAY: VARIOUS	FISCAL YEAR: 2015	SECTION: 14-PPRPS_01-PV	COUNTY OF COOK DEPARTMENT OF TRANSPORTATION AND HIGHWAYS	COMPUTED: KLP DRAWN: KLP CHECKED: HPS	REVISIONS / DATE MM/DD/YR	PROJECT NAME - PROJECT LIMITS / STANDARDS	C-9 SCALE: NONE SHEET

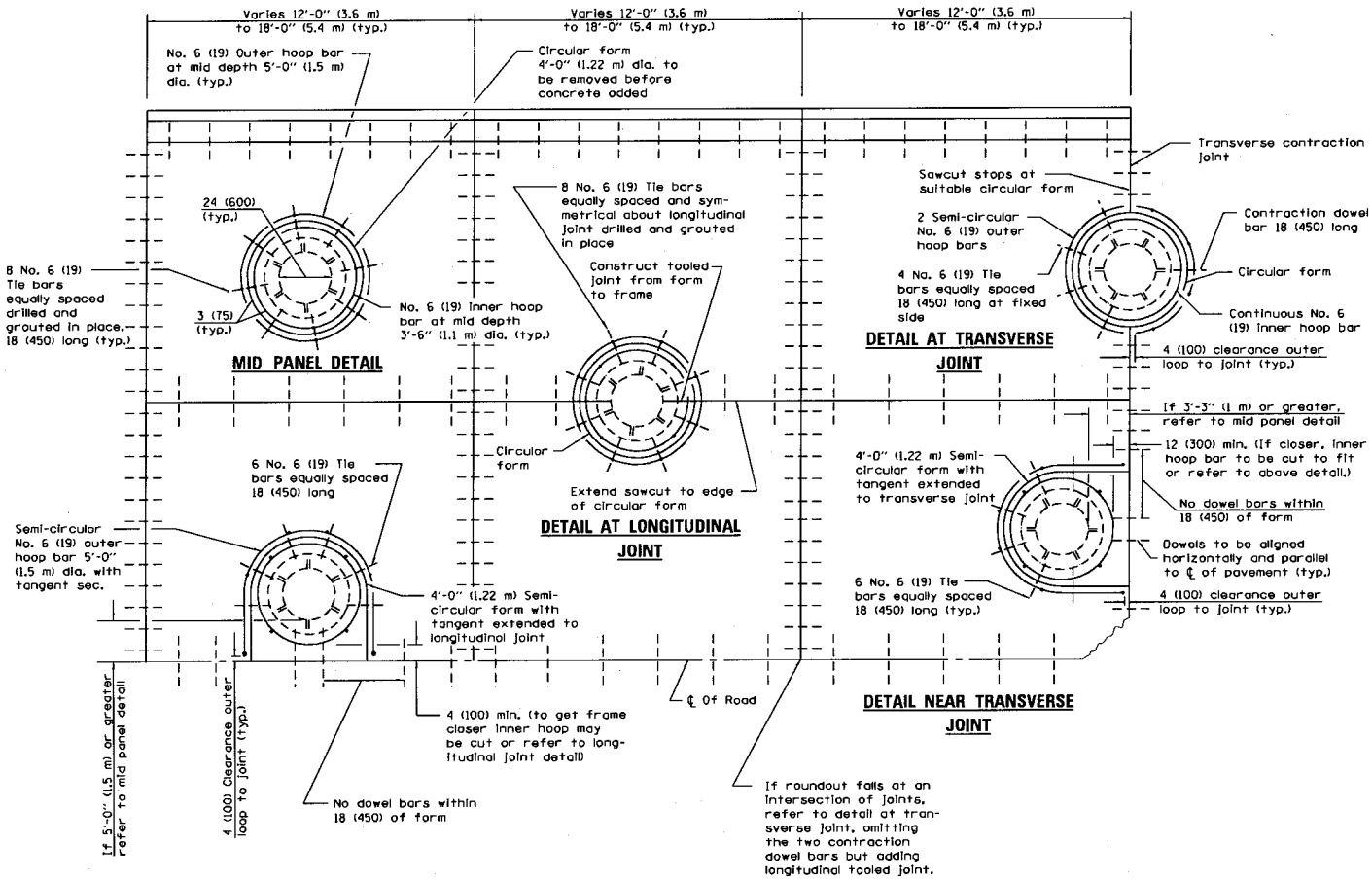

GENERAL NOTES

Transverse joints may be moved to accommodate roundout. Edge of circular joint shall be minimum 24 (600) from transverse joint. Relocated transverse joint shall be continuous from edge of pavement to edge of pavement.

The transverse joint spacing should be adjusted to avoid using the DETAIL AT TRANSVERSE JOINT. If the joint cannot be adjusted to use the DETAIL NEAR TRANSVERSE JOINT, the joint must be in the center of the structure as shown.

Circular form shall be removed prior to drill and grout of tie bars.

Drill and grout is preferred, however tie bars can be poured in place if clearance is provided to outer edge of frame. Maximum 2 (50) clearance.

Shims shall be used to adjust all frames. After adjusting mortar has cured, the shims shall be removed and the voids under the frames filled with nonshrink grout.

Hoop reinforcement shall be one piece construction having a minimum lap length of 24 (600).

All situations not shown and may require combination of details.

WHEN USING CAST IN PLACE:
Frame shall be anchored to the structure to prevent movement during the paving operation.

All dimensions are in inches (millimeters) unless otherwise shown.

PCC PAVEMENT ROUNDOUTS

(Sheet 1 of 2)

STANDARD 420111-03

VARIOUS LOCATIONS	COUNTY HIGHWAY: VARIOUS	FISCAL YEAR: 2015	SECTION: 14-PPRPS_01-PV	COUNTY OF COOK DEPARTMENT OF TRANSPORTATION AND HIGHWAYS	COMPUTED: KLP DRAWN: KLP CHECKED: HPS	REVISIONS	DATE MM/DD/YR	PROJECT NAME – PROJECT LIMITS / STANDARDS	C-10 SCALE: NONE SHEET

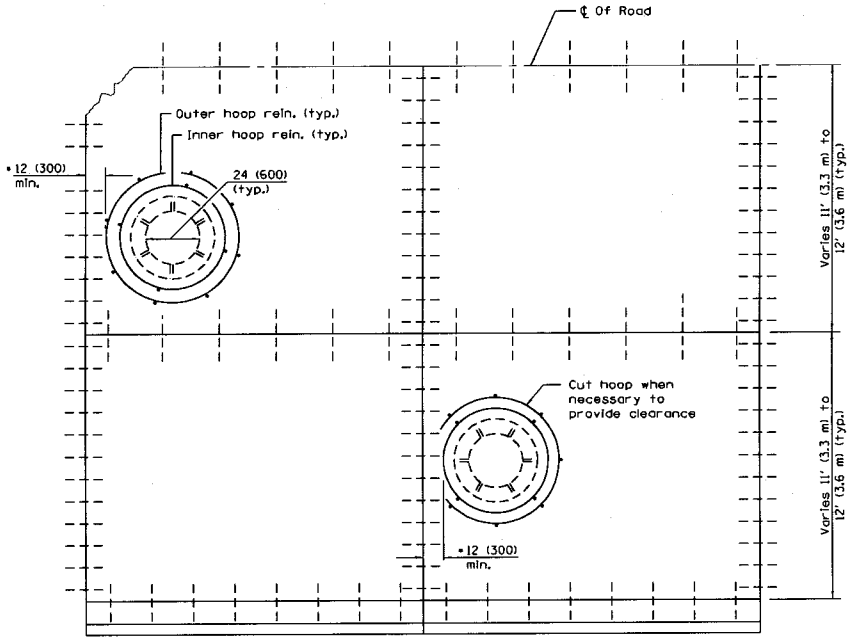

CAST IN PLACE DETAIL

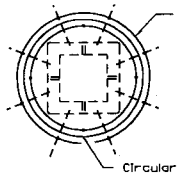

All dimensions same for the majority of circular frame & grates. For larger structures increase hoop bar and circular form diameter by 12 (300) each and add two additional equally spaced tie bars.

ROUNDOUT FOR SQUARE FRAME & GRATE AND MANHOLES

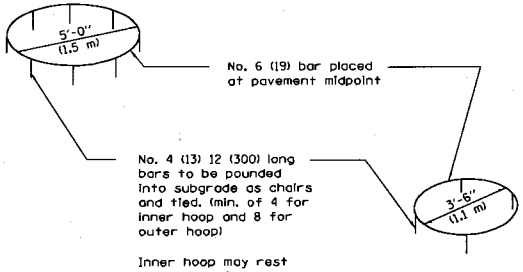

No. 6 (19) bar placed at pavement midpoint

No. 4 (13) 12 (300) long bars to be pounded into subgrade as chairs and tied. (min. of 4 for inner hoop and 8 for outer hoop)

Inner hoop may rest dowel bar (tie bar to longitudinal joint) or tie bars which shall not interfere in the alignment.

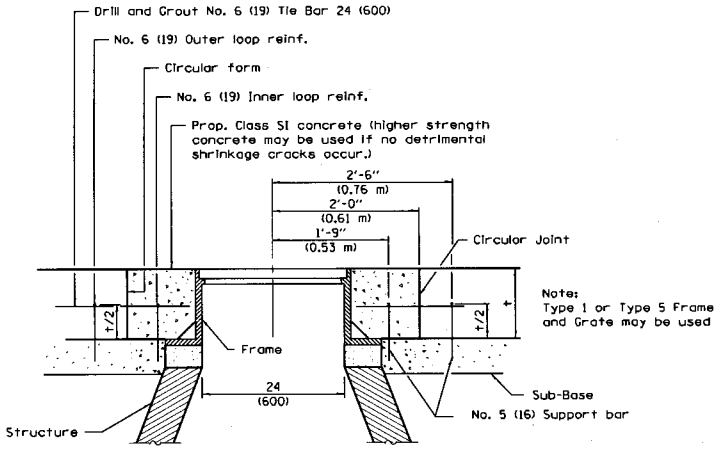

Note: Type 1 or Type 5 Frame and Grate may be used

DETAIL OF REINFORCEMENT FOR PAVEMENT ROUNDOUT

PCC PAVEMENT ROUNDOUTS

(Sheet 2 of 2)

STANDARD 420111-03

VARIOUS LOCATIONS	COUNTY HIGHWAY: VARIOUS	FISCAL YEAR: 2015	SECTION: 14-PPRPS_01-PV	COUNTY OF COOK DEPARTMENT OF TRANSPORTATION AND HIGHWAYS	COMPUTED: KLP DRAWN: KLP CHECKED: HPS	REVISIONS / DATE MM/DD/YR	PROJECT NAME – PROJECT LIMITS / STANDARDS	C-11 SCALE: NONE SHEET

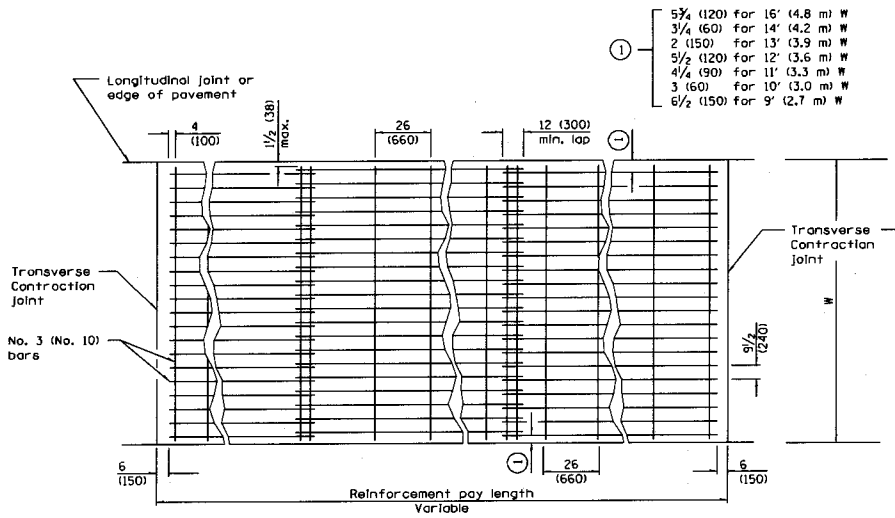

Approximately 63 lbs./100 sq. ft. (3.7 kg/m²)

When clipped bar mats are used, each bar intersection shall be clipped with W1.7 (3.74) wire.

TYPE B

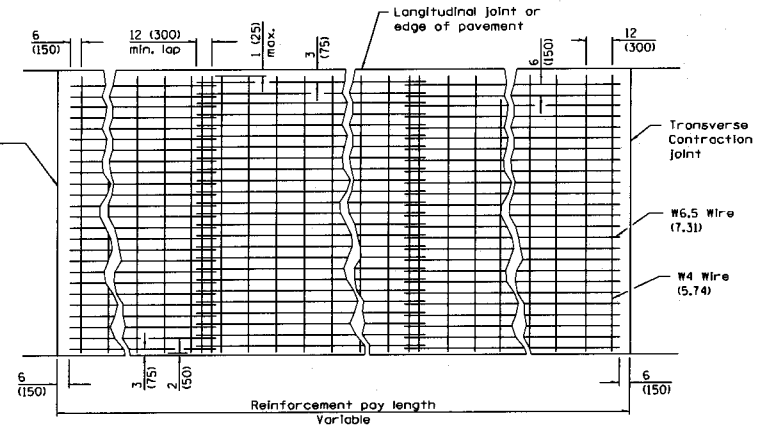

Approximately 63 lbs./100 sq. ft. (3.07 kg/m²)

TYPE A

• When the 12 (300) minimum cannot be achieved, the transverse joints shall be extended to either the longitudinal joint or edge of pavement.

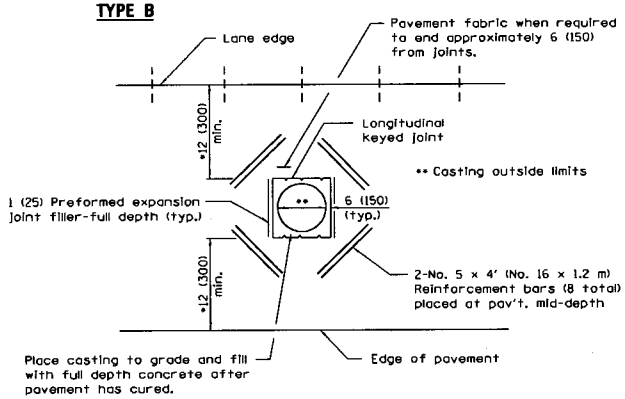

DETAIL OF ADDED REINFORCEMENT FOR PAVEMENT BLOCKS-OUTS

GENERAL NOTES

Pavement block-outs shall be at least 24 (600) from contraction joints.

Pavement fabric which is lapped longitudinally shall have a minimum lap of 6 (150).

Pavement fabric may be positioned with the transverse wires on top or bottom of the longitudinal wires.

All dimensions are in inches (millimeters) unless otherwise shown.

PAVEMENT FABRIC

STANDARD 420701-02

VARIOUS LOCATIONS	COUNTY HIGHWAY:	VARIOUS	COUNTY OF COOK DEPARTMENT OF TRANSPORTATION AND HIGHWAYS	COMPUTED: KLP DRAWN: KLP CHECKED: HPS	REVISIONS	DATE MM/DD/YR	PROJECT NAME – PROJECT LIMITS STANDARDS	C-12
	FISCAL YEAR:	2015						SCALE: NONE SHEET
	SECTION:	14-PPRPS_01-PV						

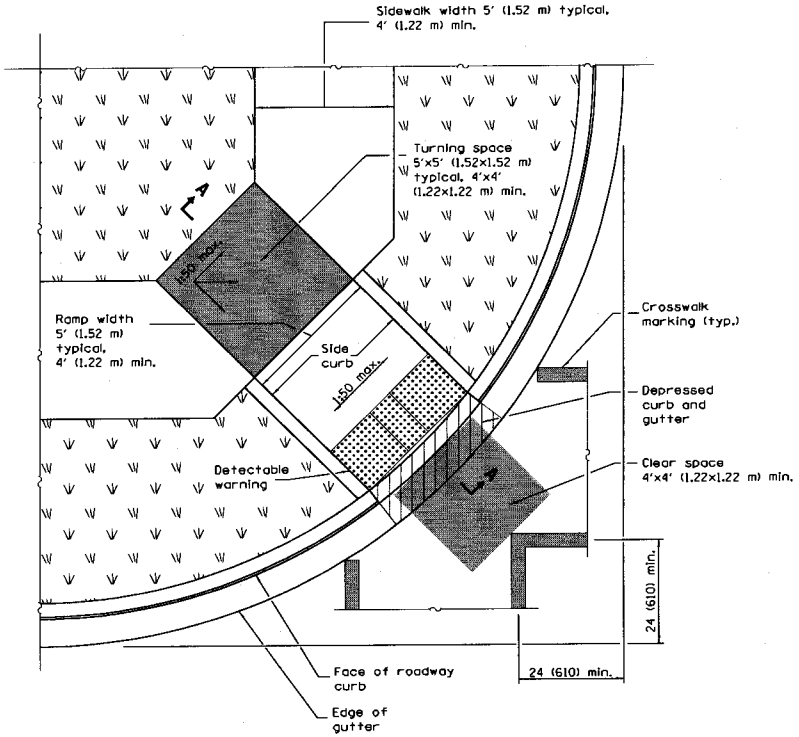

RAMP IN LANDSCAPED AREA

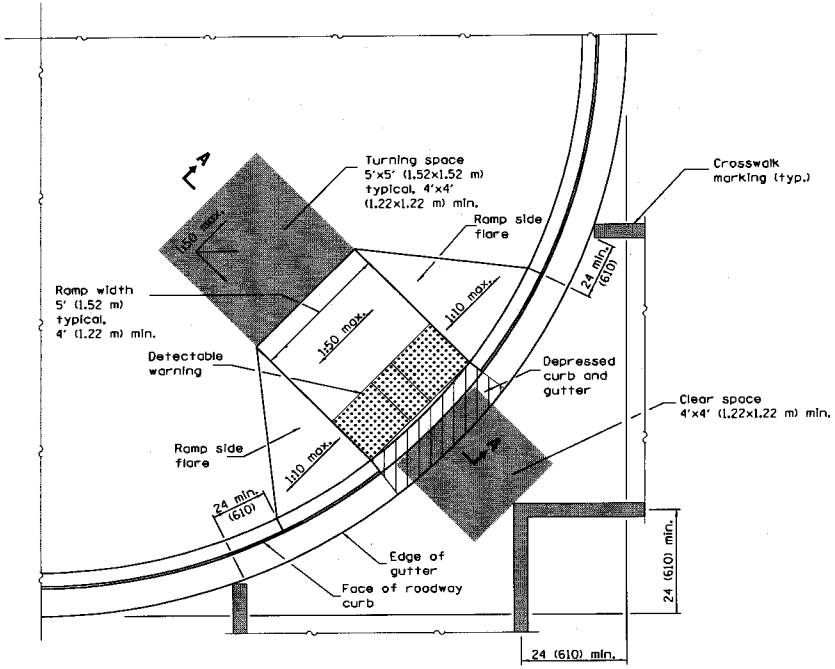

RAMP IN PAVED AREA

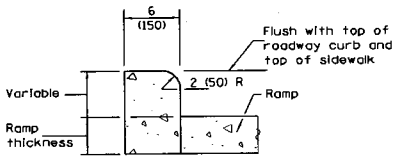

SIDE CURB DETAIL

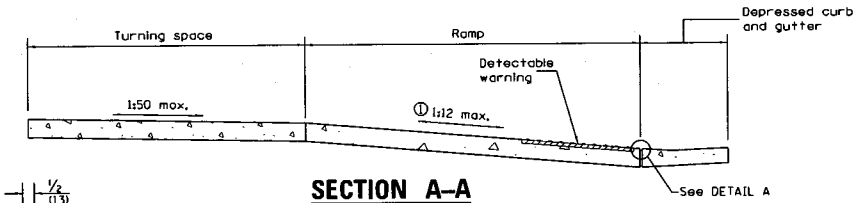

SECTION A–A

① The running slope of the curb ramp shall not require the ramp length to exceed 15' (4.5 m).

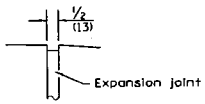

DETAIL A

GENERAL NOTES

This Standard shall only be used for curb radii of 20 ft. (6.1 m) or greater.

Where the turning space is constrained on a side opposite a ramp, the minimum length of the turning space in the direction of the ramp-run shall be 5' (1.52 m).

Where 1:50 maximum slope is shown, 1:64 is preferred.

All slope ratios are expressed as units of vertical displacement to units of horizontal displacement (V:H).

See Standard 606001 for details of depressed curb adjacent to curb ramp.

All dimensions are in inches (millimeters) unless otherwise shown.

DIAGONAL CURB RAMPS FOR SIDEWALKS

STANDARD 424006–02

VARIOUS LOCATIONS	COUNTY HIGHWAY: VARIOUS	FISCAL YEAR: 2015	SECTION: 14-PPRPS_01-PV	COUNTY OF COOK DEPARTMENT OF TRANSPORTATION AND HIGHWAYS	COMPUTED: KLP DRAWN: KLP CHECKED: HPS	REVISIONS	DATE MM/DD/YR	PROJECT NAME – PROJECT LIMITS / STANDARDS	C-13 SCALE: NONE SHEET

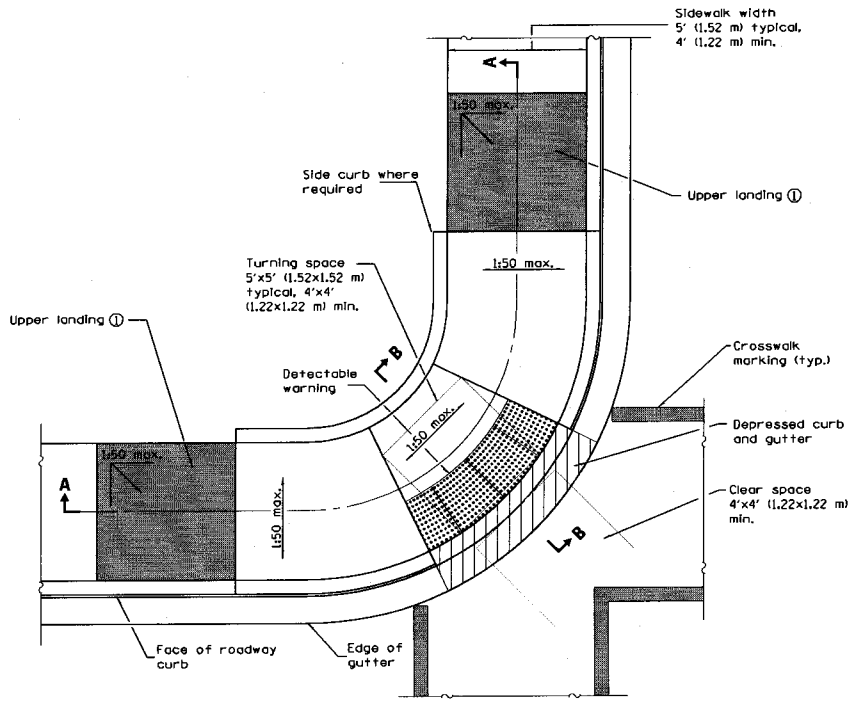

CORNER PARALLEL CURB RAMP

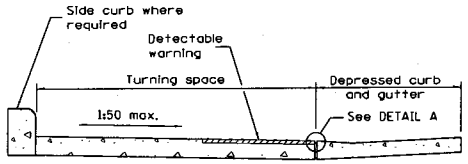

SECTION B–B

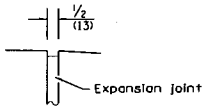

DETAIL A

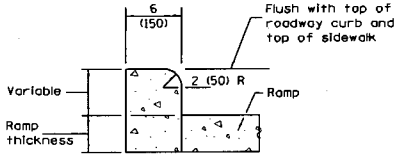

SIDE CURB DETAIL

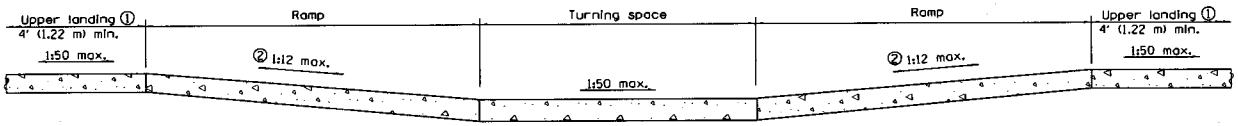

SECTION A–A

① Upper landing(s) not required for ramp slopes flatter than 1:20.

② The running slope of the curb ramp shall not require the ramp length to exceed 15' (4.5 m).

GENERAL NOTES

All slope ratios are expressed as units of vertical displacement to units of horizontal displacement (V:H).

Where the turning space is constrained on a side opposite a ramp, the minimum length of the turning space in the direction of the ramp-run shall be 5' (1.52 m).

Where 1:50 maximum slope is shown, 1:64 is preferred.

See Standard 606001 for details of depressed curb adjacent to curb ramp.

All dimensions are in inches (millimeters) unless otherwise shown.

CORNER PARALLEL CURB RAMPS FOR SIDEWALKS

STANDARD 424011–02

VARIOUS LOCATIONS	COUNTY HIGHWAY: VARIOUS	COUNTY OF COOK DEPARTMENT OF TRANSPORTATION AND HIGHWAYS	COMPUTED: KLP DRAWN: KLP CHECKED: HPS	REVISIONS	DATE MM/DD/YR	PROJECT NAME – PROJECT LIMITS	C–14
	FISCAL YEAR: 2015					STANDARDS	
	SECTION: 14-PPRPS_01-PV						SCALE: NONE SHEET

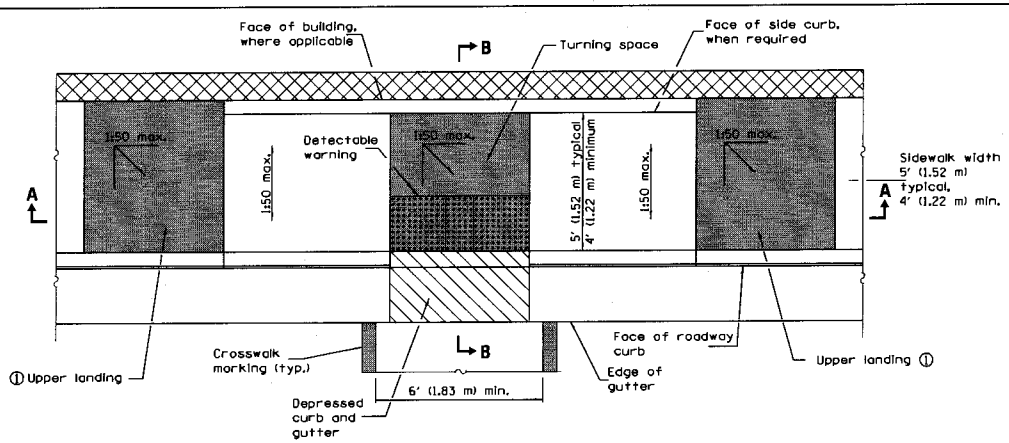

PARALLEL MID-BLOCK CURB RAMP

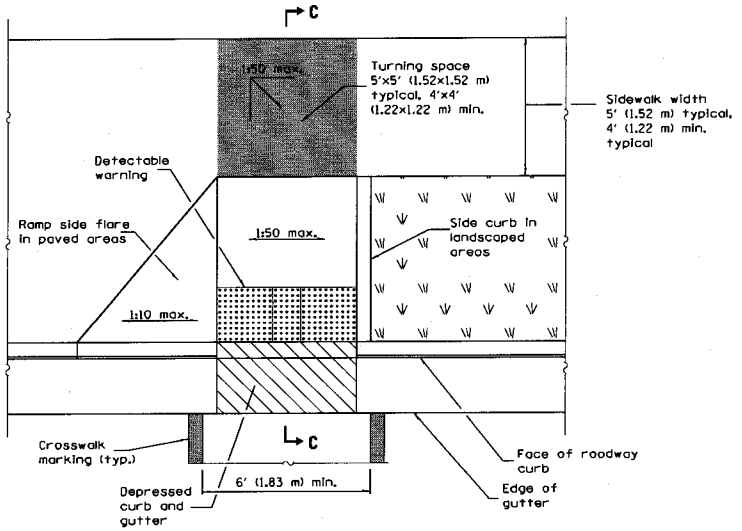

PERPENDICULAR MID-BLOCK CURB RAMP

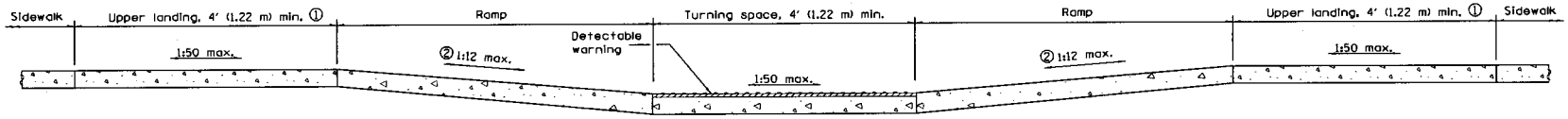

SECTION A-A

① Upper landing(s) not required for ramp slopes flatter than 1:20.

② The running slope of the curb ramp shall not require the ramp length to exceed 15' (4.5 m).

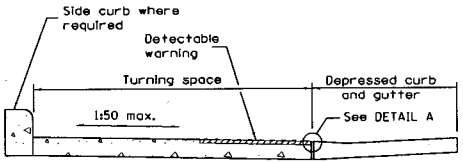

SECTION B-B

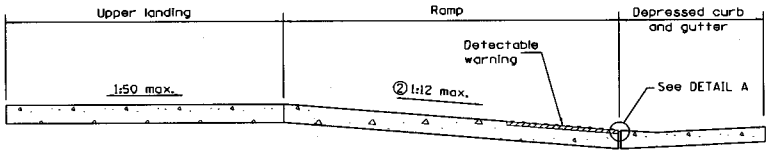

SECTION C-C

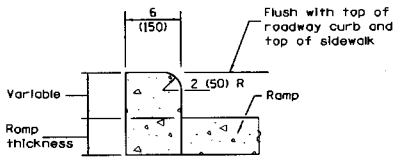

SIDE CURB DETAIL

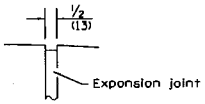

DETAIL A

GENERAL NOTES

All slope ratios are expressed as units of vertical displacement to units of horizontal displacement (V:H).

Where the turning space is constrained on a side opposite a ramp, the minimum length of the turning space in the direction of the ramp-run shall be 5' (1.52 m).

Where 1:50 maximum slope is shown, 1:64 is preferred.

See Standard 606001 for details of depressed curb adjacent to curb ramp.

All dimensions are in inches (millimeters) unless otherwise shown.

MID-BLOCK CURB RAMPS FOR SIDEWALKS

STANDARD 424016-02

VARIOUS LOCATIONS	COUNTY HIGHWAY: VARIOUS	COUNTY OF COOK DEPARTMENT OF TRANSPORTATION AND HIGHWAYS	COMPUTED: KLP DRAWN: KLP CHECKED: HPS	REVISIONS	DATE MM/DD/YR	PROJECT NAME - PROJECT LIMITS	C-15
	FISCAL YEAR: 2015					STANDARDS	SCALE: NONE SHEET
	SECTION: 14-PMRPS_01-PV						

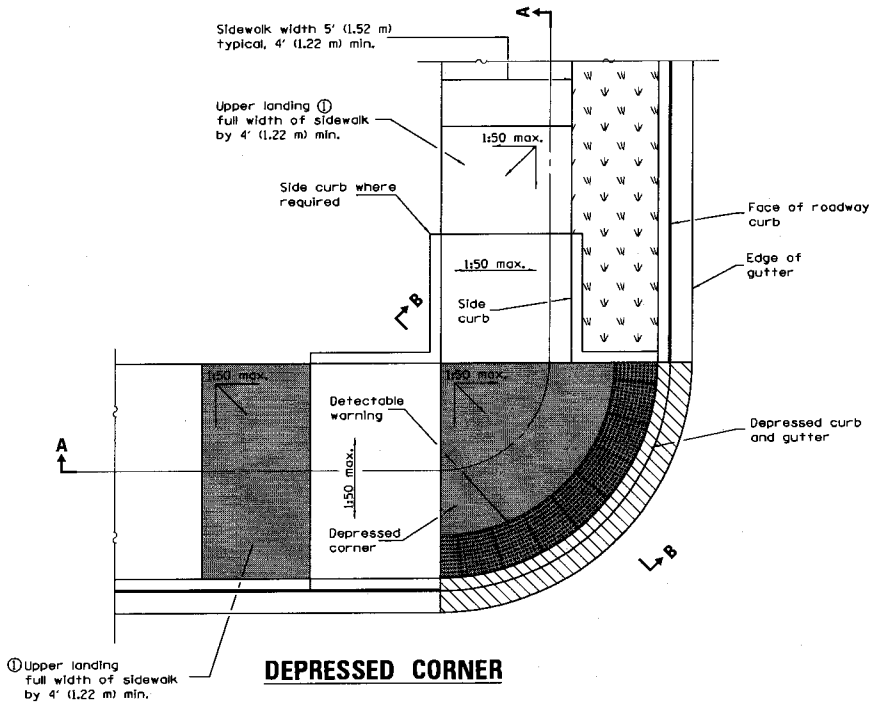

DEPRESSED CORNER

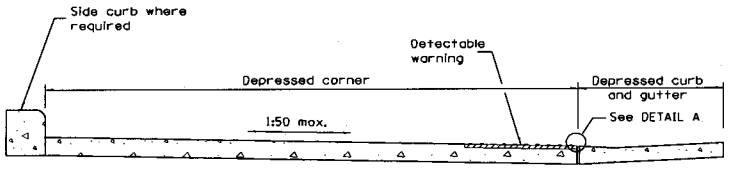

SECTION B–B

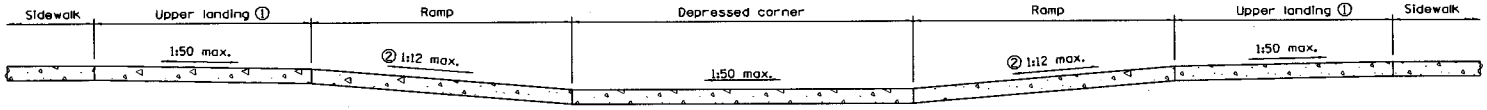

SECTION A–A

① Upper landing(s) not required for ramp slopes flatter than 1:20.

② The running slope of the curb ramp shall not require the ramp length to exceed 15' (4.5 m).

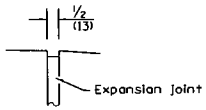

DETAIL A

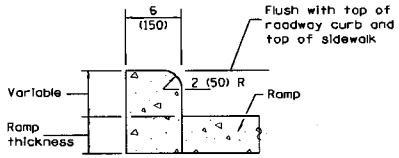

SIDE CURB DETAIL

GENERAL NOTES

This standard shall only be used for curb radii of 6 ft. (1.83 m) or greater.

All slope ratios are expressed as units of vertical displacement to units of horizontal displacement (V:H).

Where 1:50 maximum slope is shown, 1:64 is preferred.

See Standard 606001 for details of depressed curb adjacent to curb ramp.

All dimensions are in inches (millimeters) unless otherwise shown.

DEPRESSED CORNER FOR SIDEWALKS

STANDARD 424021–03

VARIOUS LOCATIONS	COUNTY HIGHWAY: VARIOUS	COUNTY OF COOK DEPARTMENT OF TRANSPORTATION AND HIGHWAYS	COMPUTED: KLP	REVISIONS	DATE MM/DD/YR	PROJECT NAME – PROJECT LIMITS	C–16
	FISCAL YEAR: 2015		DRAWN: KLP			STANDARDS	SCALE: NONE SHEET
	SECTION: 14-PPRPS_01-PV		CHECKED: HPS				

② Detectable warning shall only be installed at entrances/alleys with permanent traffic control devices (i.e. stop signs, signals).

③ Where possible, maintain the grade of the sidewalk across the entrance/alley to avoid the need for ramps and upper landings.

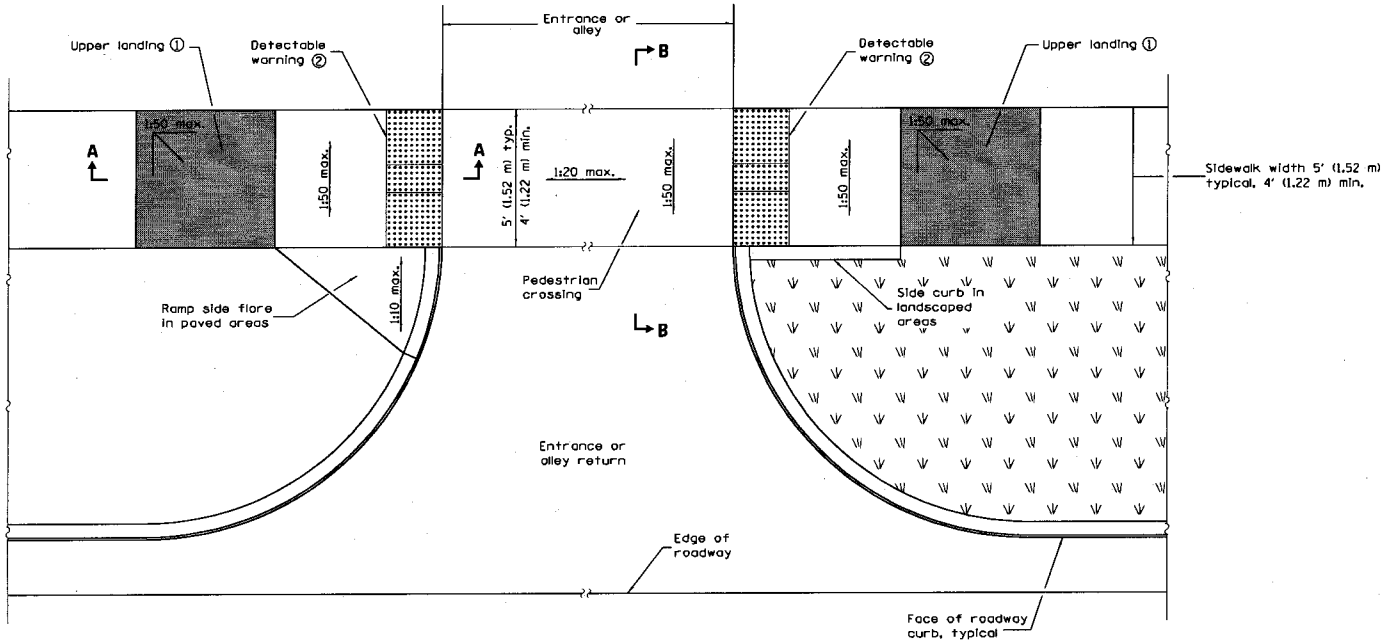

ENTRANCE /ALLEY PEDESTRIAN CROSSING

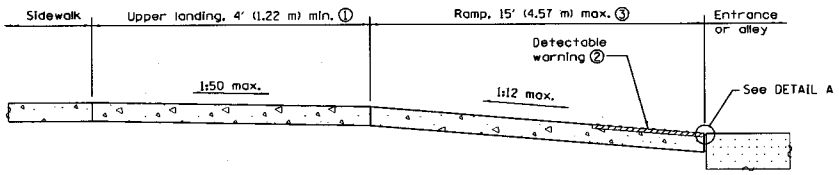

SECTION A–A

① Upper landing not required for ramp slopes flatter than 1:20.

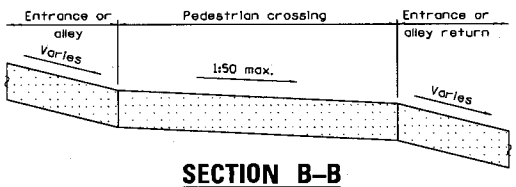

SECTION B–B

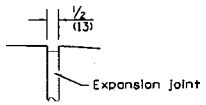

DETAIL A

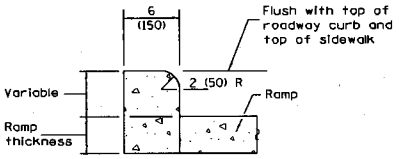

SIDE CURB DETAIL

GENERAL NOTES

All slope ratios are expressed as units of vertical displacement to units of horizontal displacement (V:H).

Where 1:50 maximum slope is shown, 1:64 is preferred.

All dimensions are in inches (millimeters) unless otherwise shown.

ENTRANCE / ALLEY PEDESTRIAN CROSSINGS

STANDARD 424026–01

VARIOUS LOCATIONS	COUNTY HIGHWAY: VARIOUS	COUNTY OF COOK DEPARTMENT OF TRANSPORTATION AND HIGHWAYS	COMPUTED: KLP	REVISIONS	DATE MM/DD/YR	PROJECT NAME – PROJECT LIMITS	C–17
	FISCAL YEAR: 2015		DRAWN: KLP			STANDARDS	SCALE: NONE SHEET
	SECTION: 14-PPRPS_01-PV		CHECKED: HPS				

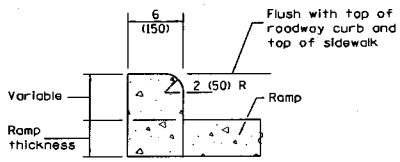

SIDE CURB DETAIL

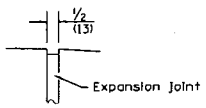

DETAIL A

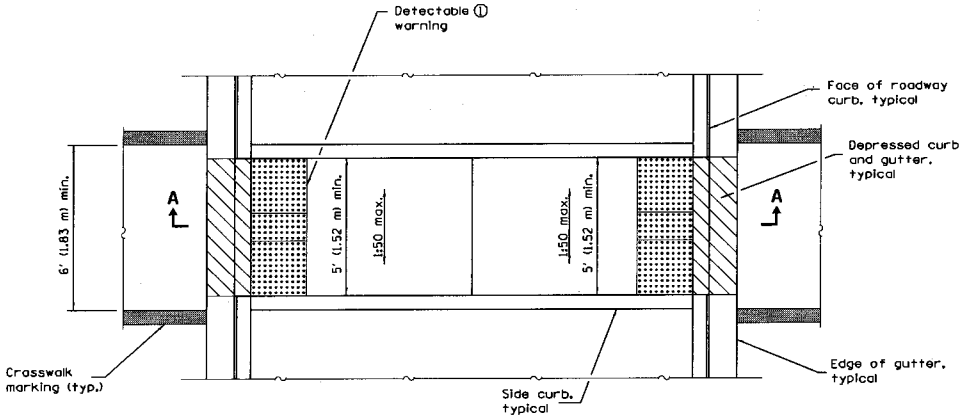

MEDIAN PEDESTRIAN CROSSING

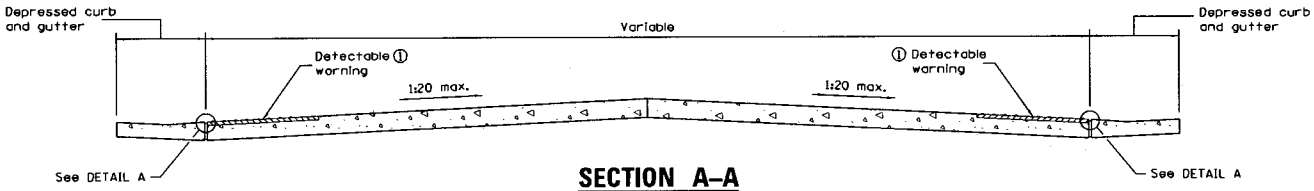

SECTION A–A

① Omit detectable warnings when distance between back of curbs is less than 6' (1.83 m).

GENERAL NOTES

All slope ratios are expressed as units of vertical displacement to units of horizontal displacement (V:H).

Where 1:50 maximum slope is shown, 1:64 is preferred.

See Standard 606001 for details of depressed curb adjacent to curb ramp.

All dimensions are in inches (millimeters) unless otherwise shown.

MEDIAN PEDESTRIAN CROSSINGS

STANDARD 424031–01

VARIOUS LOCATIONS	COUNTY HIGHWAY: VARIOUS	COUNTY OF COOK	COMPUTED: KLP	REVISIONS	DATE	PROJECT NAME – PROJECT LIMITS	C–18
	FISCAL YEAR: 2015	DEPARTMENT OF TRANSPORTATION AND HIGHWAYS	DRAWN: KLP		MM/DD/YR	STANDARDS	SCALE: NONE SHEET
	SECTION: 14-PPRPS_01-PV		CHECKED: HPS				

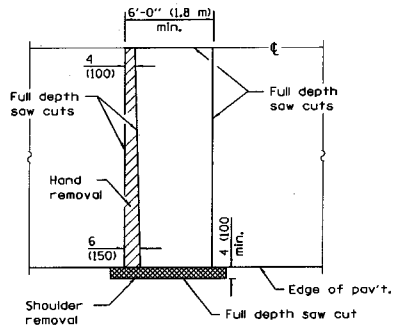

PAVEMENT SAWING DETAIL

(HMA SHOULDER)

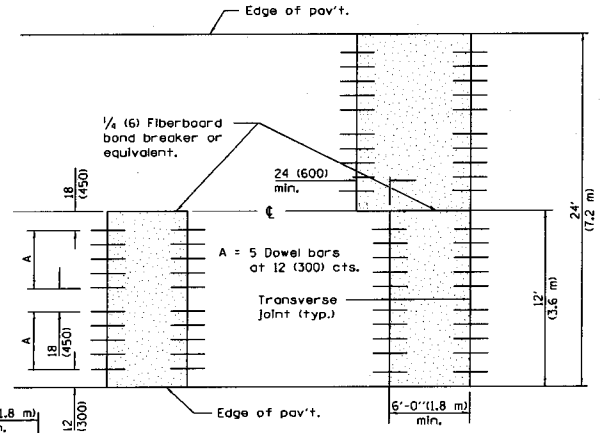

12' (3.6 m) WIDE LANES

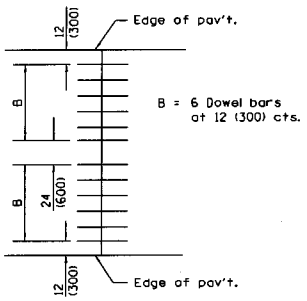

14' (4.2 m) WIDE RAMP

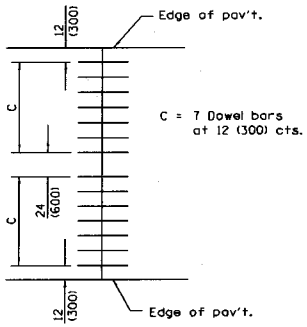

16' (4.8 m) WIDE RAMP

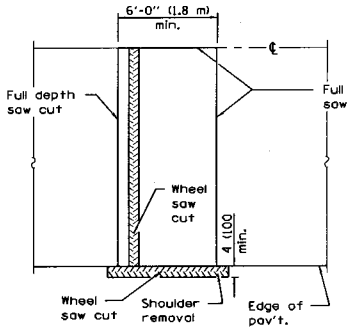

ALTERNATE SAWING DETAIL

(HMA SHOULDER)

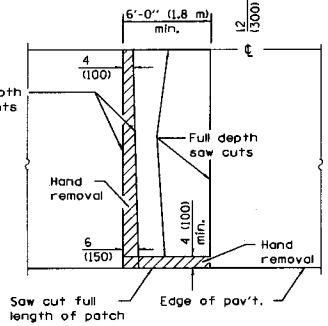

PAVEMENT SAWING DETAIL

(PCC SHOULDER)

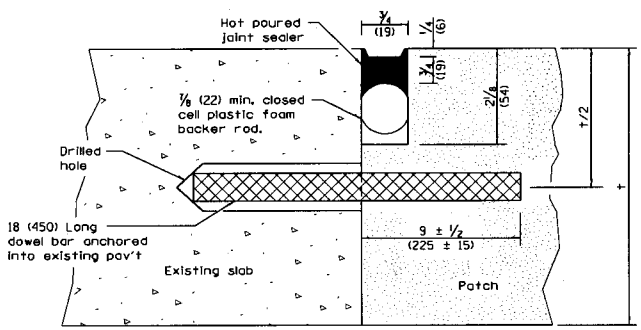

TRANSVERSE JOINT

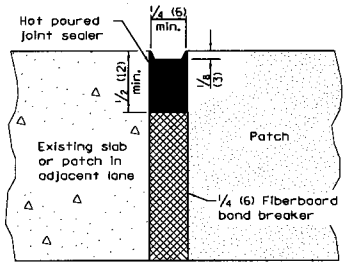

CENTERLINE JOINT

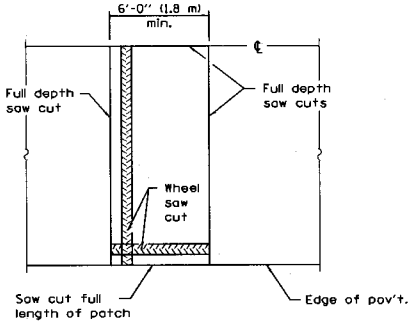

ALTERNATE SAWING DETAIL

(PCC SHOULDER)

DOWEL BAR TABLE		
PAVEMENT THICKNESS	DOWEL BAR DIAMETER	HOLE DIAMETER
8 (200) or greater	1 1/2 (38)	1 5/8 (41)
7 (180) thru 7.99 (199)	1 1/4 (32)	1 3/8 (35)
Less than 7 (180)	1 (25)	1 1/8 (29)

GENERAL NOTES

The transverse joints for Class B patches shall align with joints or cracks in the adjacent lane whenever possible.

See Standard 420701 for details of pavement fabric.

All dimensions are in inches (millimeters) unless otherwise shown.

CLASS B PATCHES

(Sheet 1 of 2)

STANDARD 442101-07

VARIOUS LOCATIONS	COUNTY HIGHWAY: VARIOUS	FISCAL YEAR: 2015	SECTION: 14-PPRPS_01-PV	COUNTY OF COOK DEPARTMENT OF TRANSPORTATION AND HIGHWAYS	COMPUTED: KLP DRAWN: KLP CHECKED: HPS	REVISIONS / DATE MM/DD/YR	PROJECT NAME - PROJECT LIMITS / STANDARDS	C-19 SCALE: NONE SHEET

TRANSVERSE EXPANSION JOINTS

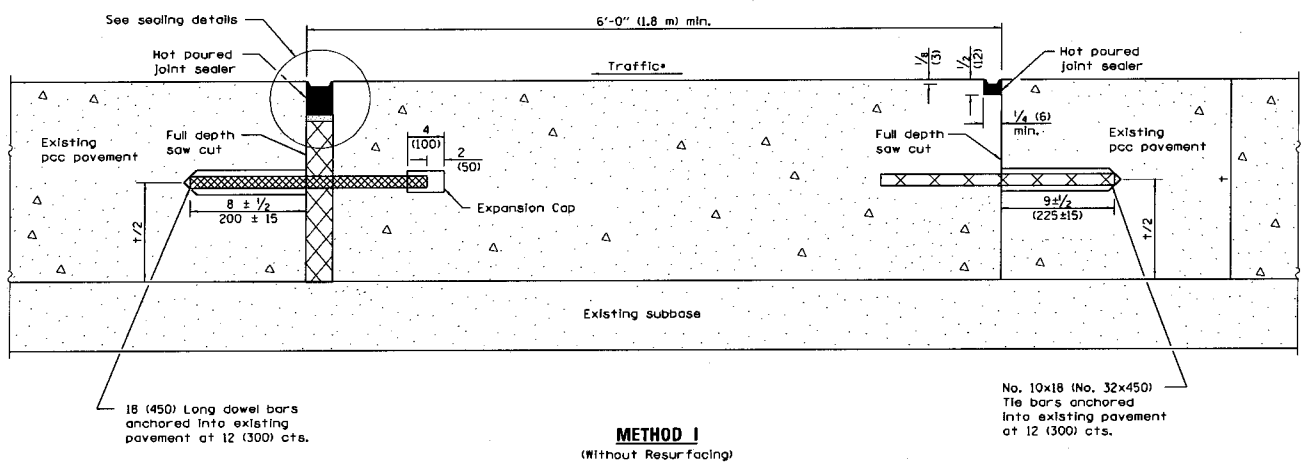

METHOD I
(Without Resurfacing)

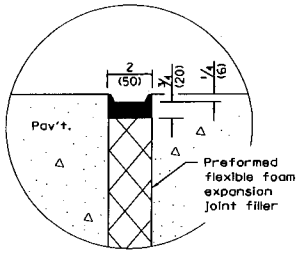

SEALING DETAIL

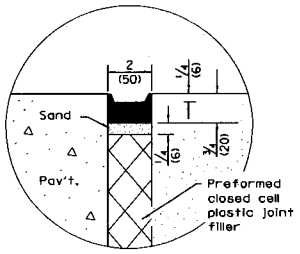

SEALING DETAIL

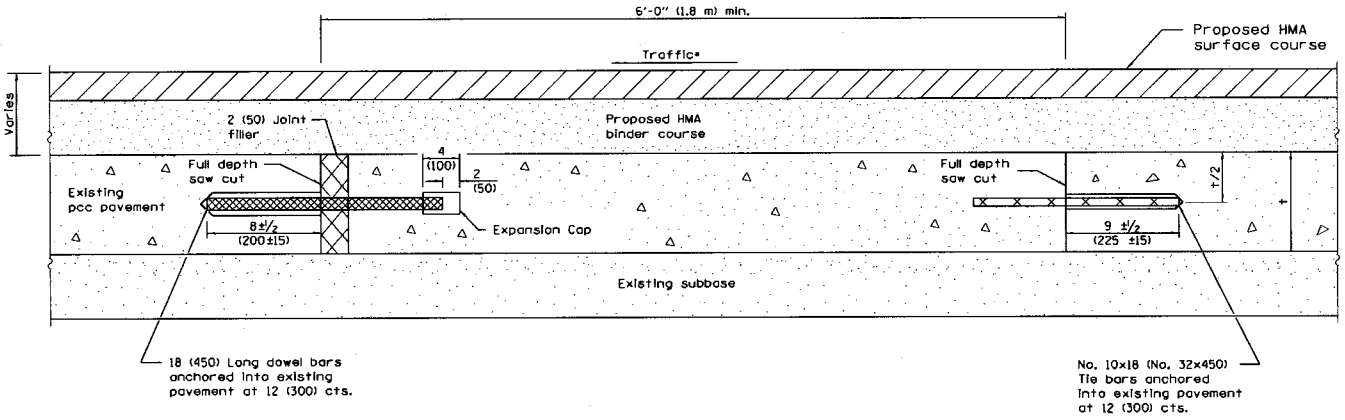

METHOD II
(With Resurfacing)

NOTE

- When re-establishing a transverse expansion joint on a two-lane, two-way road, reverse the orientation of the dowel bars with respect to traffic for one of the patches such that the joint will be continuous across both lanes.

CLASS B PATCHES

(Sheet 2 of 2)

STANDARD 442101-07

VARIOUS LOCATIONS	COUNTY HIGHWAY: VARIOUS FISCAL YEAR: 2015 SECTION: 14-PPRPS_01-PV	COUNTY OF COOK DEPARTMENT OF TRANSPORTATION AND HIGHWAYS	COMPUTED: KLP DRAWN: KLP CHECKED: HPS	REVISIONS	DATE MM/DD/YR	PROJECT NAME – PROJECT LIMITS STANDARDS	C-20 SCALE: NONE SHEET

CLASS C

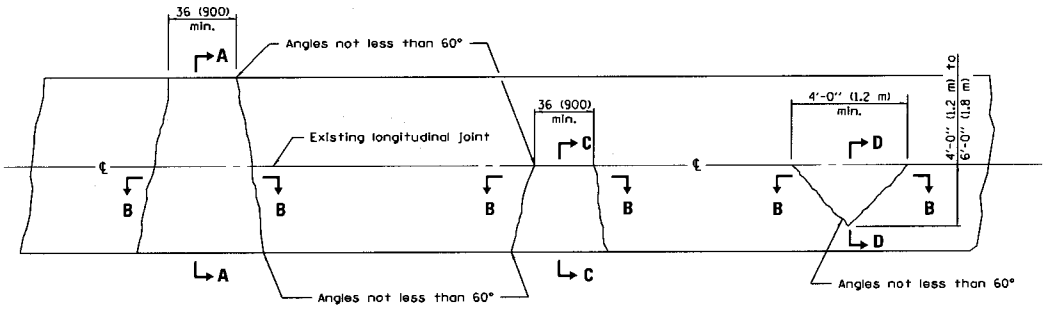

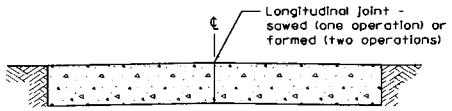

SECTION A–A

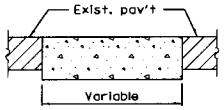

SECTION B–B

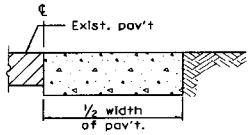

SECTION C–C

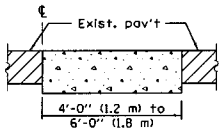

SECTION D–D

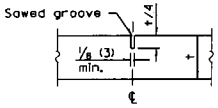

DETAIL OF SAWED CONTRACTION JOINT

Note:
Longitudinal joints shall be as detailed on Standard 420001, except tie bars are not required for patches 20'-0" (6.0 m) or less in length.

CLASS D

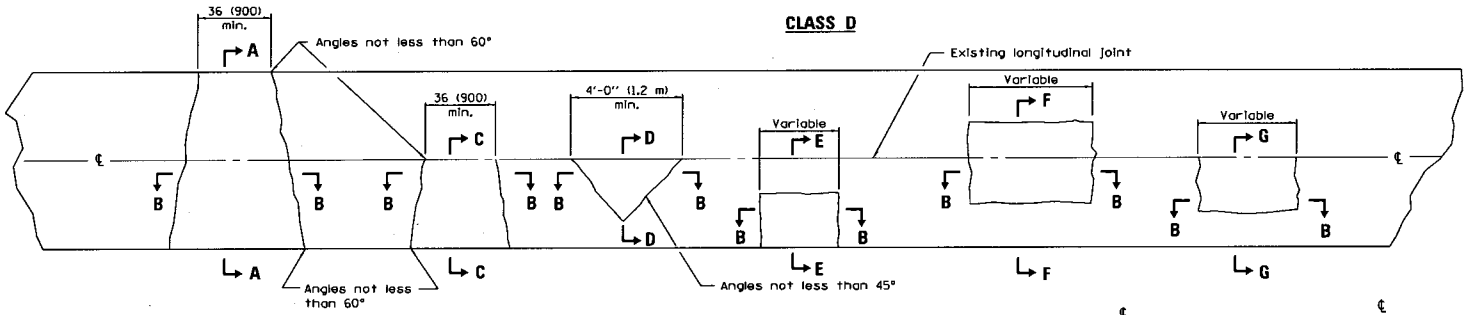

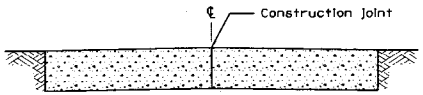

SECTION A–A
(Built in two operations)

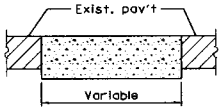

SECTION B–B

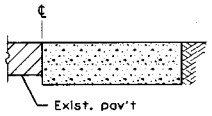

SECTION C–C

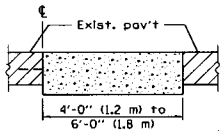

SECTION D–D

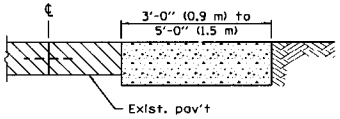

SECTION E–E

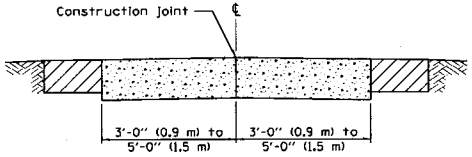

SECTION F–F
(Built in two operations)

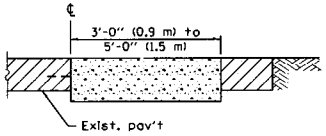

SECTION G–G

GENERAL NOTES

Existing tie bars shall be either cut or removed. Marginal bars shall be cut.

All dimensions are in inches (millimeters) unless otherwise shown.

CLASS C and D PATCHES

STANDARD 442201–03

VARIOUS LOCATIONS	COUNTY HIGHWAY: VARIOUS	COUNTY OF COOK DEPARTMENT OF TRANSPORTATION AND HIGHWAYS	COMPUTED: KLP	REVISIONS	DATE MM/DD/YR	PROJECT NAME – PROJECT LIMITS	C–21
	FISCAL YEAR: 2015		DRAWN: KLP			STANDARDS	
	SECTION: 14-PPRPS_01-PV		CHECKED: HPS				SCALE: NONE SHEET

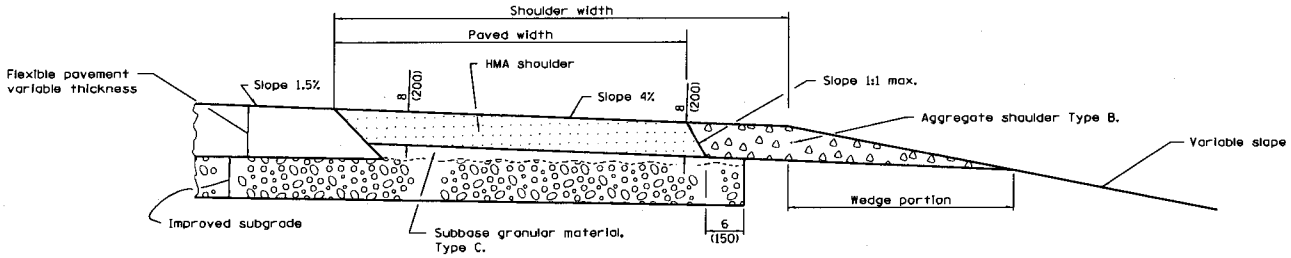

SHOULDER FOR TANGENT PAVEMENT

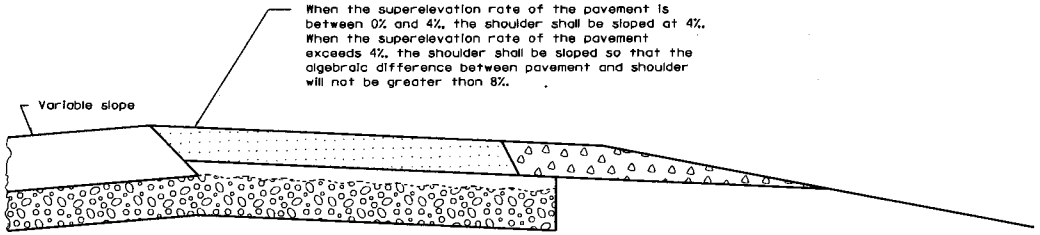

SHDULDER FOR SUPERELEVATED PAVEMENT (OUTSIDE OF CURVE)

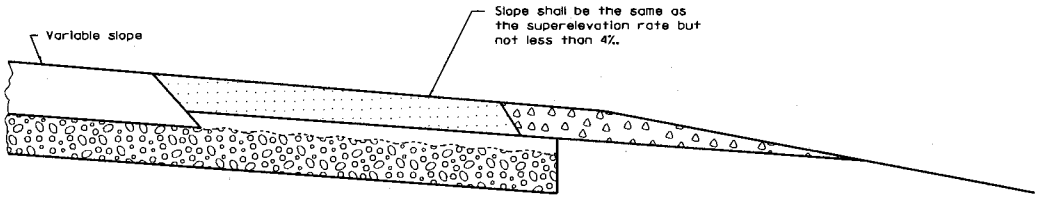

SHOULDER FOR SUPERELEVATED PAVEMENT (INSIDE OF CURVE)

GENERAL NOTES

Except as noted or shown the dimensions and notes specified for the shoulder of tangent pavement are typical for the shoulders of superelevated pavement.

All dimensions are in inches (millimeters) unless otherwise shown.

HMA SHOULDER ADJACENT TO FLEXIBLE PAVEMENT

STANDARD 482001-02

VARIOUS LOCATIONS	COUNTY HIGHWAY: VARIOUS	COUNTY OF COOK	COMPUTED: KLP	REVISIONS	DATE	PROJECT NAME - PROJECT LIMITS	C-22
	FISCAL YEAR: 2015	DEPARTMENT OF TRANSPORTATION AND HIGHWAYS	DRAWN: KLP		MM/DD/YR	STANDARDS	
	SECTION: 14-PPRPS_01-PV		CHECKED: HPS				SCALE: NONE SHEET

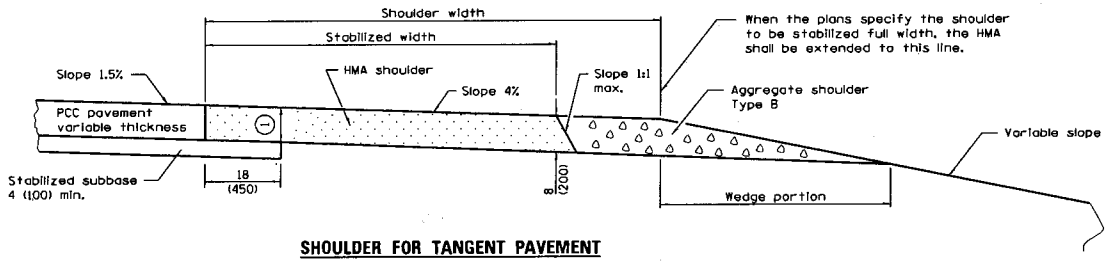

SHOULDER FOR TANGENT PAVEMENT

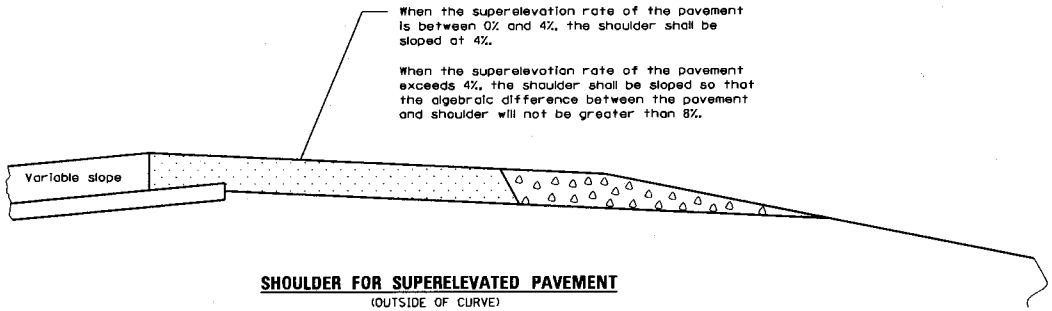

SHOULDER FOR SUPERELEVATED PAVEMENT

(OUTSIDE OF CURVE)

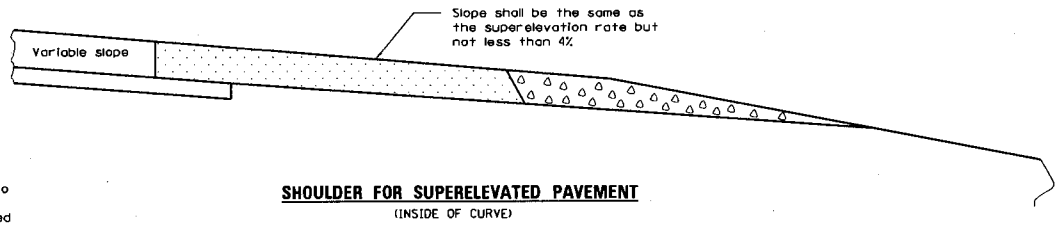

SHOULDER FOR SUPERELEVATED PAVEMENT

(INSIDE OF CURVE)

(1) (Applies only when subbase extension is to remain in place.) This thickness will vary with the thickness of pavement, extended length of subbase, and the slope of pavement. When this thickness is less than 8 (200), the stabilized shoulder shall be stepped down at this line to provide a 8 (200) minimum thickness.

GENERAL NOTES

Except as noted or shown the dimensions and notes specified for the shoulder of tangent pavement are typical for the shoulders of superelevated pavement.

All slope ratios are expressed as units of vertical displacement to units of horizontal displacement (V:H).

All dimensions are in inches (millimeters) unless otherwise shown.

HMA SHOULDER ADJACENT TO RIGID PAVEMENT

STANDARD 482006-03

VARIOUS LOCATIONS	COUNTY HIGHWAY: VARIOUS	COUNTY OF COOK DEPARTMENT OF TRANSPORTATION AND HIGHWAYS	COMPUTED: KLP	REVISIONS	DATE	PROJECT NAME - PROJECT LIMITS	C-23	
	FISCAL YEAR: 2015		DRAWN: KLP		MM/DD/YR	STANDARDS	SCALE: NONE	SHEET
	SECTION: 14-PPRPS_01-PV		CHECKED: HPS					

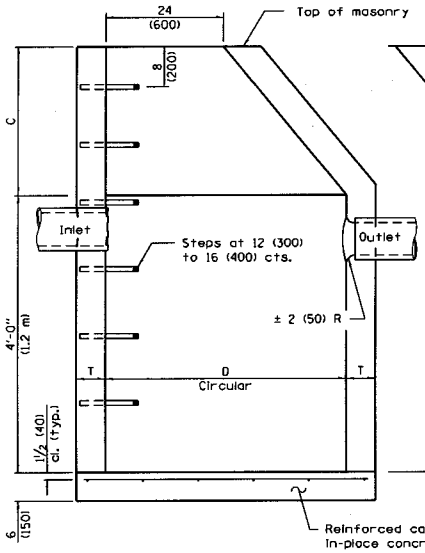

ELEVATION
(Standard Outlet)

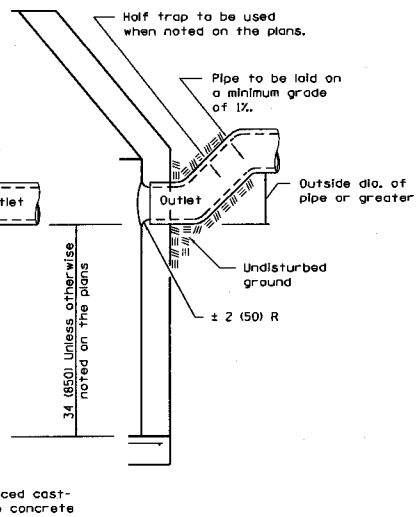

ELEVATION
(Half Trap)

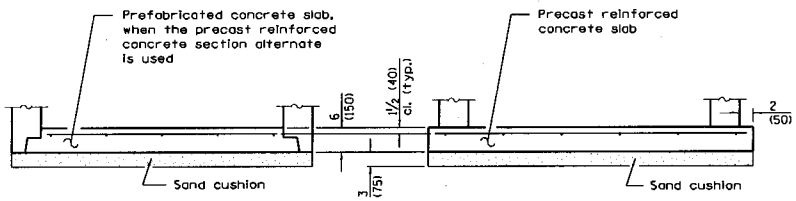

ALTERNATE BOTTOM SLAB

ALTERNATE MATERIALS FOR WALLS	D	C*	T (min.)
Concrete Masonry Unit	4'-0" (1.2 m) 5'-0" (1.5 m)	30 (750) 3'-9" (1.15 m)	5 (125) 5 (125)
Brick Masonry	4'-0" (1.2 m) 5'-0" (1.5 m)	30 (750) 3'-9" (1.15 m)	8 (200) 8 (200)
Precast Reinforced Concrete Section	4'-0" (1.2 m) 5'-0" (1.5 m)	30 (750) 3'-9" (1.15 m)	4 (100) 5 (125)
Cast-in-place Concrete	4'-0" (1.2 m) 5'-0" (1.5 m)	30 (750) 3'-9" (1.15 m)	6 (150) 6 (150)

* For precast reinforced concrete sections, dimension "C" may vary from the dimension given to plus 6 (150).

GENERAL NOTES

Bottom slabs shall be reinforced with a minimum of 0.20 sq. in./ft (420 sq. mm/m) in both directions with a maximum spacing of 12 (300).

Bottom slabs may be connected to the riser as determined by the fabricator; however, only a single row of reinforcement around the perimeter may be utilized.

See Standard 602601 for optional precast reinforced concrete flat slab top.

See Standard 602701 for details of steps.

All dimensions are in inches (millimeters) unless otherwise shown.

CATCH BASIN TYPE A

STANDARD 602001-02

VARIOUS LOCATIONS	COUNTY HIGHWAY: VARIOUS FISCAL YEAR: 2015 SECTION: 14-PPRPS_01-PV	COUNTY OF COOK DEPARTMENT OF TRANSPORTATION AND HIGHWAYS	COMPUTED: KLP DRAWN: KLP CHECKED: HPS	REVISIONS	DATE MM/DD/YR	PROJECT NAME - PROJECT LIMITS STANDARDS	DU-21 SCALE: NONE SHEET

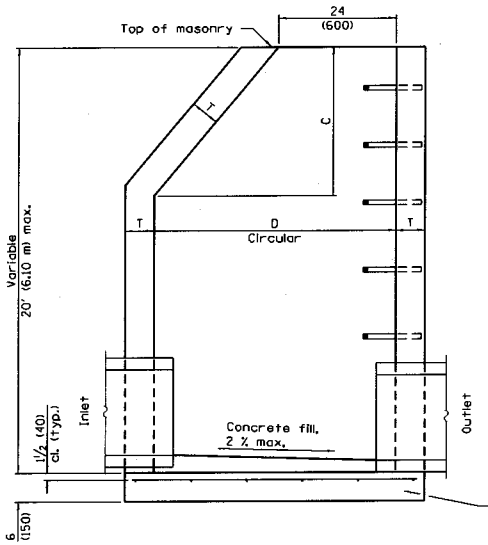

ELEVATION – ECCENTRIC

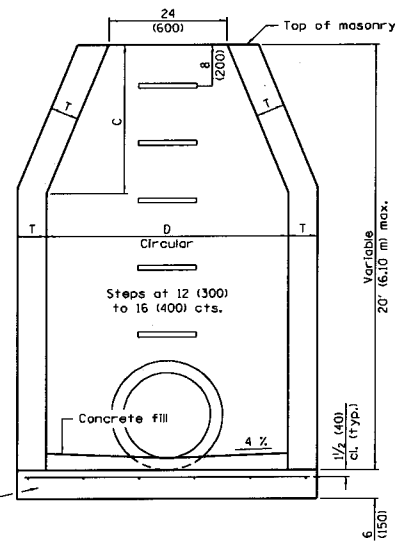

ELEVATION – CONCENTRIC

ALTERNATE MATERIALS FOR WALLS	D	C*	T (min.)
Concrete Masonry Unit	4'-0" (1.2 m) 5'-0" (1.5 m)	30 (750) 3'-9" (1.15 m)	5 (125) 5 (125)
Brick Masonry	4'-0" (1.2 m) 5'-0" (1.5 m)	30 (750) 3'-9" (1.15 m)	8 (200) 8 (200)
Precast Reinforced Concrete Section	4'-0" (1.2 m) 5'-0" (1.5 m)	30 (750) 3'-9" (1.15 m)	4 (100) 5 (125)
Cast-in-place Concrete	4'-0" (1.2 m) 5'-0" (1.5 m)	30 (750) 3'-9" (1.15 m)	6 (150) 6 (150)

* For precast reinforced concrete sections, dimension "C" may vary from the dimension given to plus 6 (150).

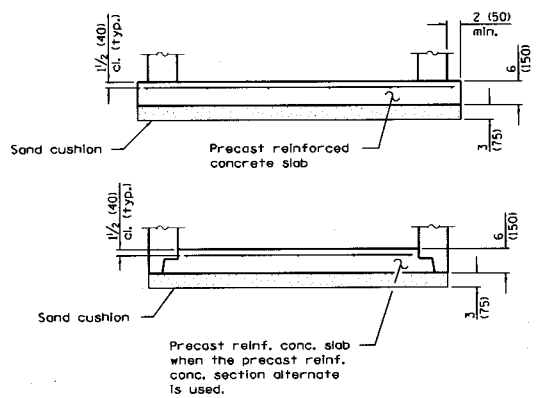

ALTERNATE BOTTOM SLAB

GENERAL NOTES

Bottom slabs shall be reinforced with a minimum of 0.31 sq. in./ft. (660 sq. mm/m) in both directions with a maximum spacing of 12 (300).

Bottom slabs may be connected to the riser as determined by the fabricator; however, only a single row of reinforcement around the perimeter may be utilized.

See Standard 602701 for details of steps.

See Standard 602601 for optional Precast Reinforced Concrete Flat Slab Top.

All dimensions are in inches (millimeters) unless otherwise shown.

MANHOLE TYPE A

STANDARD 602401-03

VARIOUS LOCATIONS	COUNTY HIGHWAY: VARIOUS FISCAL YEAR: 2015 SECTION: 14-PPRPS-01-PV	COUNTY OF COOK DEPARTMENT OF TRANSPORTATION AND HIGHWAYS	COMPUTED: KLP DRAWN: KLP CHECKED: HPS	REVISIONS	DATE MM/DD/YR	PROJECT NAME – PROJECT LIMITS STANDARDS	DU-22 SCALE: NONE SHEET

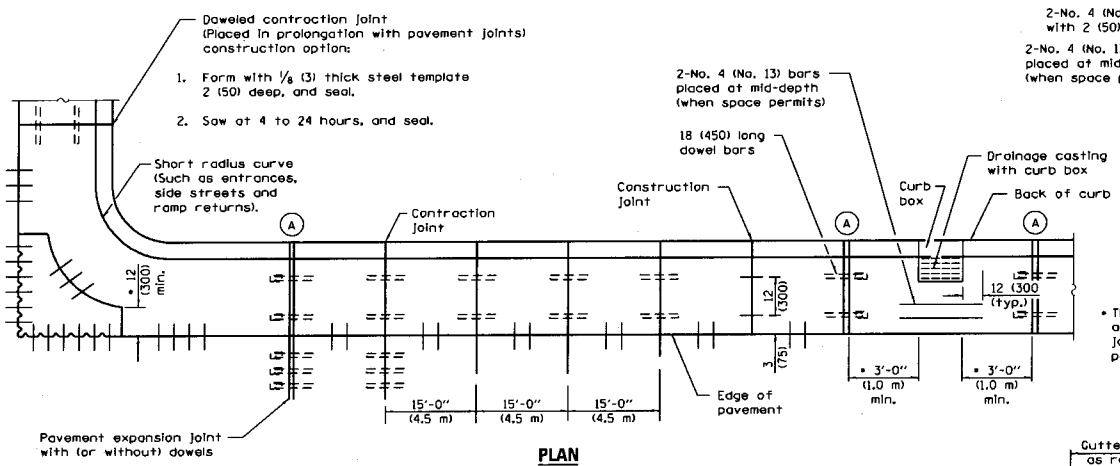

* This dimension shall be adjusted to align with joint on the adjacent pavement

PLAN
ADJACENT TO PCC PAVEMENT OR PCC BASE COURSE

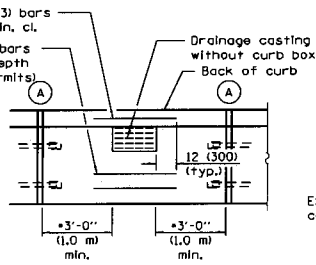

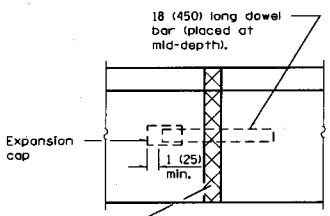

DETAIL (A)
EXPANSION JOINT

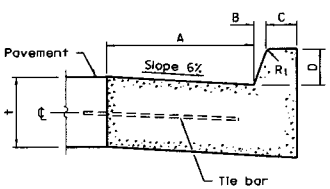

BARRIER CURB

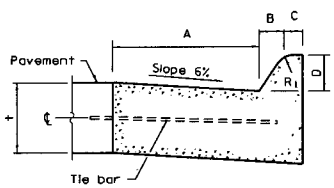

MOUNTABLE CURB

TABLE OF DIMENSIONS BARRIER CURB					
TYPE	A	B	C	D	R_1
B-6.06 * (B-15.15)	6 (150)	1 (25)	6 (150)	6 (150)	1 (25)
B-6.12 (B-15.3)	12 (300)	1 (25)	6 (150)	6 (150)	1 (25)
B-6.18 (B-15.45)	18 (450)	1 (25)	6 (150)	6 (150)	1 (25)
B-6.24 (B-15.60)	24 (600)	1 (25)	6 (150)	6 (150)	1 (25)
B-9.12 (B-22.30)	12 (300)	2 (50)	5 (125)	9 (225)	1 (25)
B-9.18 (B-22.45)	18 (450)	2 (50)	5 (125)	9 (225)	1 (25)
B-9.24 (B-22.60)	24 (600)	2 (50)	5 (125)	9 (225)	1 (25)

* For corner islands only.

TABLE OF DIMENSIONS MOUNTABLE CURB						
TYPE	A	B	C	D	R_1	R_2
M-2.06 (M-5.15)	6 (150)	2 (50)	4 (100)	2 (50)	3 (75)	2 (50)
M-2.12 (M-5.30)	12 (300)	2 (50)	4 (100)	2 (50)	3 (75)	2 (50)
M-4.06 (M-10.15)	6 (150)	4 (100)	3 (75)	4 (100)	3 (75)	NA
M-4.12 (M-10.30)	12 (300)	4 (100)	3 (75)	4 (100)	3 (75)	NA
M-4.18 (M-10.45)	18 (450)	4 (100)	3 (75)	4 (100)	3 (75)	NA
M-4.24 (M-10.60)	24 (600)	4 (100)	3 (75)	4 (100)	3 (75)	NA
M-6.06 (M-15.15)	6 (150)	6 (150)	2 (50)	6 (150)	2 (50)	NA
M-6.12 (M-15.30)	12 (300)	6 (150)	2 (50)	6 (150)	2 (50)	NA
M-6.18 (M-15.45)	18 (450)	6 (150)	2 (50)	6 (150)	2 (50)	NA
M-6.24 (M-15.60)	24 (600)	6 (150)	2 (50)	6 (150)	2 (50)	NA

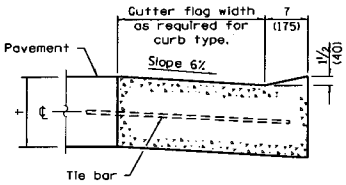

DEPRESSED CURB (TYPICAL)

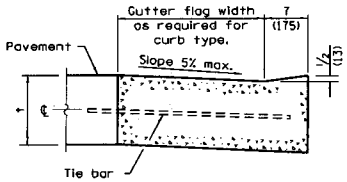

DEPRESSED CURB ADJACENT TO CURB RAMP ACCESSIBLE TO THE DISABLED

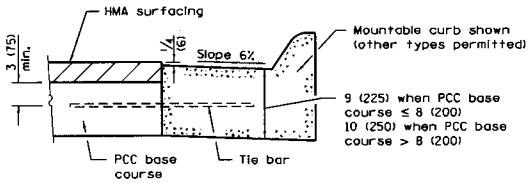

ADJACENT TO PCC BASE COURSE WITH HMA SURFACING

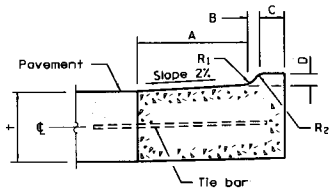

M-2.06 (M-5.15) and M-2.12 (M-5.30)

GENERAL NOTES

The bottom slope of combination curb and gutter constructed adjacent to pcc pavement shall be the same slope as the subbase or 6% when subbase is omitted.

t = Thickness of pavement.

Longitudinal joint tie bars shall be No. 6 (No. 19) at 24 (600) centers in accordance with details for longitudinal construction joint shown on Standard 420001.

A minimum clearance of 2 (50) between the end of the tie bar and the back of the curb shall be maintained.

The dowel bars shown in contraction joints will only be required for monolithic construction.

See Standard 606301 for details of corner islands.

All dimensions are in inches (millimeters) unless otherwise shown.

CONCRETE CURB TYPE B AND COMBINATION CONCRETE CURB AND GUTTER

(Sheet 1 of 2)

STANDARD 606001-06

VARIOUS LOCATIONS	COUNTY HIGHWAY: VARIOUS	FISCAL YEAR: 2015	SECTION: 14-PPRPS.01-PV	COUNTY OF COOK DEPARTMENT OF TRANSPORTATION AND HIGHWAYS	COMPUTED: KLP DRAWN: KLP CHECKED: HPS	REVISIONS / DATE MM/DD/YR	PROJECT NAME – PROJECT LIMITS / STANDARDS	C-24 SCALE: NONE SHEET

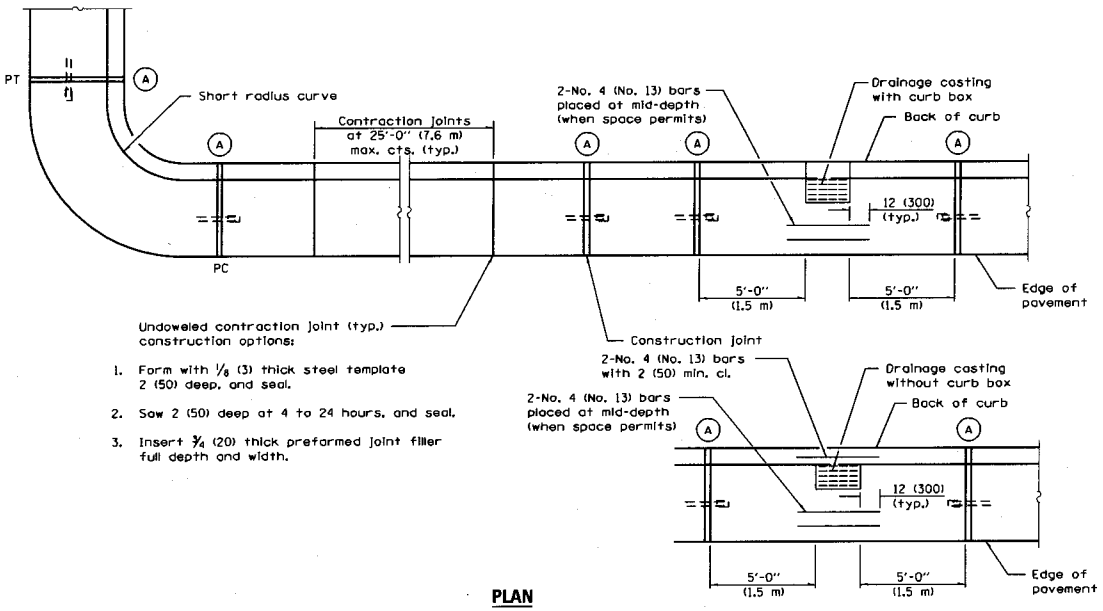

PLAN

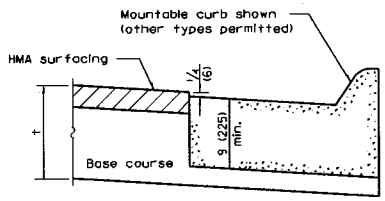

ON DISTURBED SUBGRADE

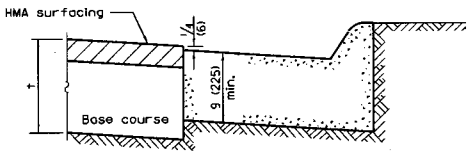

ON UNDISTURBED SUBGRADE

ADJACENT TO FLEXIBLE PAVEMENT

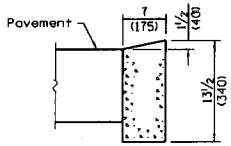

DEPRESSED CURB

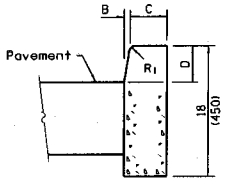

BARRIER CURB

ADJACENT TO FLEXIBLE PAVEMENT

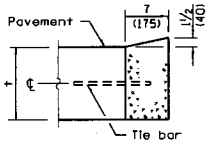

DEPRESSED CURB

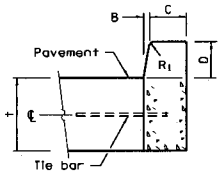

BARRIER CURB

ADJACENT TO PCC PAVEMENT OR PCC BASE COURSE

CONCRETE CURB TYPE B

CONCRETE CURB TYPE B AND COMBINATION CONCRETE CURB AND GUTTER

(Sheet 2 of 2)

STANDARD 606001-06

VARIOUS LOCATIONS	COUNTY HIGHWAY:	VARIOUS	COUNTY OF COOK DEPARTMENT OF TRANSPORTATION AND HIGHWAYS	COMPUTED: KLP DRAWN: KLP CHECKED: HPS	REVISIONS	DATE MM/DD/YR	PROJECT NAME – PROJECT LIMITS	C-25	
	FISCAL YEAR:	2015					STANDARDS		
	SECTION:	14-PPRPS_01-PV						SCALE: NONE	SHEET

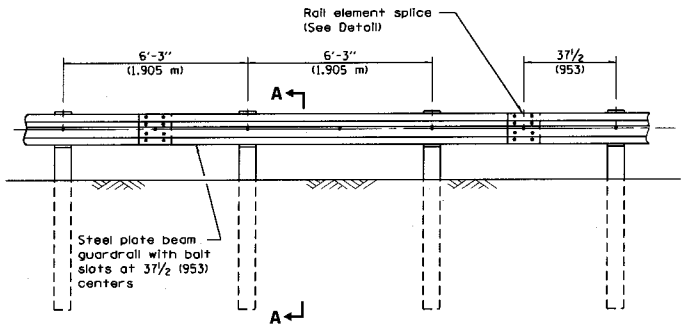

ELEVATION

TYPE A

6'-3" (1.905 m) Typical post spacing

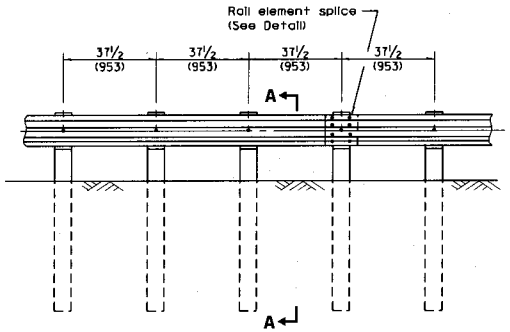

ELEVATION

TYPE B

37½ (953) Closed post spacing

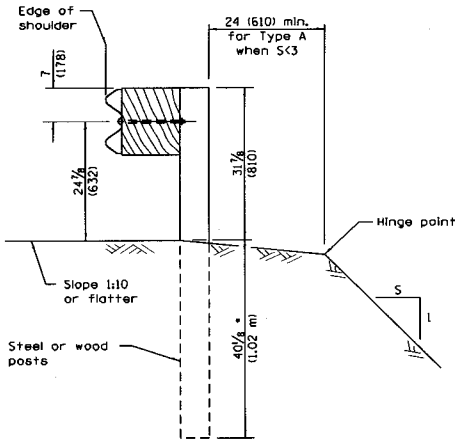

SECTION A–A

* When "S" is less than 3 and the distance from the back of post is less than 24 (610), the post shall be steel and the embedment shall be 76⅛ (1934).

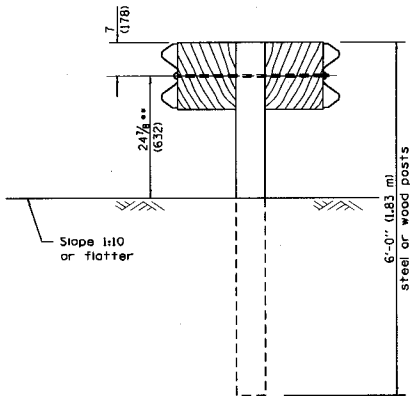

SECTION B–B

** When connecting Type D guardrail to an impact attenuator, adjust this dimension to 21⅞ (556) over a distance of 25'-0" (7.62 m) from point of connection.

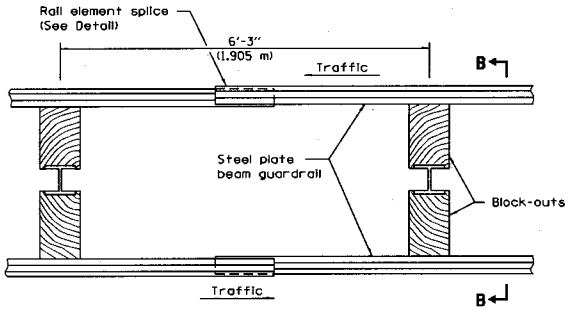

PLAN

TYPE D

Double steel plate beam guardrail
6'-3" (1.905 m) typical post spacing

GENERAL NOTES

All slope ratios are expressed as units of vertical displacement to units of horizontal displacement (V:H).

All dimensions are in inches (millimeters) unless otherwise shown.

STEEL PLATE BEAM GUARDRAIL

(Sheet 1 of 4)

STANDARD 630001–10

VARIOUS LOCATIONS	COUNTY HIGHWAY:	VARIOUS	COUNTY OF COOK DEPARTMENT OF TRANSPORTATION AND HIGHWAYS	COMPUTED: KLP DRAWN: KLP CHECKED: HPS	REVISIONS	DATE MM/DD/YR	PROJECT NAME – PROJECT LIMITS STANDARDS	C–26	
	FISCAL YEAR:	2015						SCALE: NONE	SHEET
	SECTION:	14-PPRPS_01-PV							

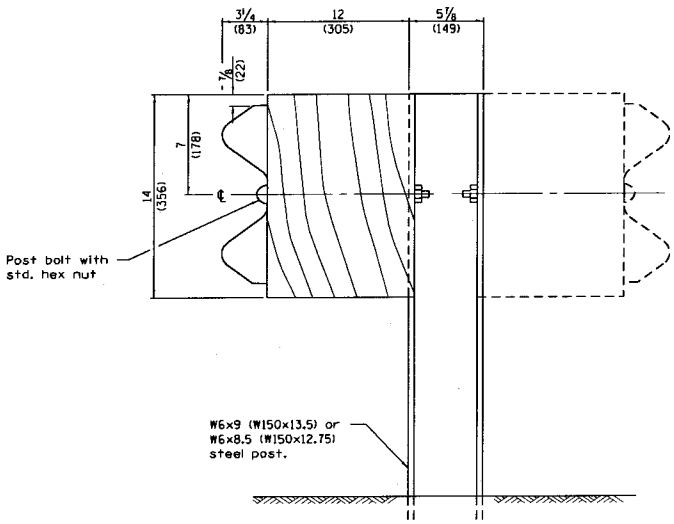

STEEL POST CONSTRUCTION

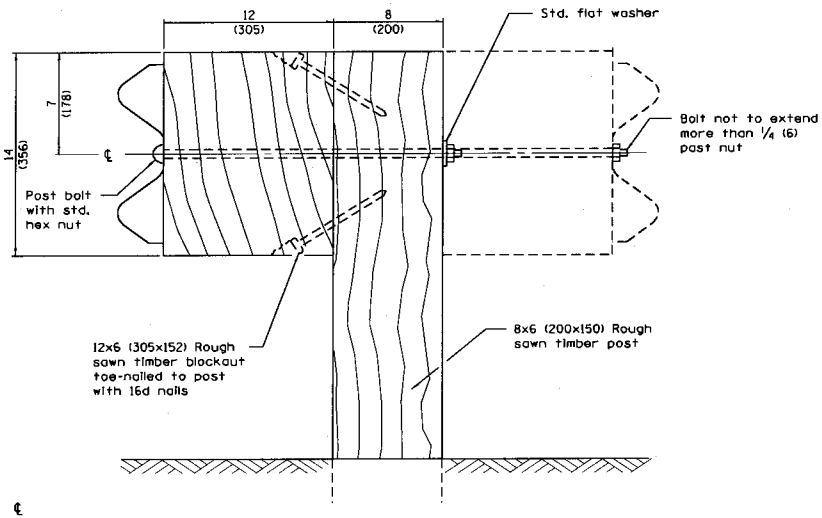

WOOD POST CONSTRUCTION

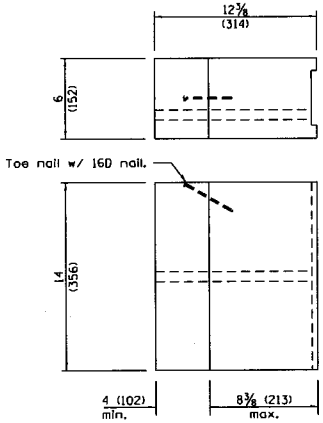

TWO-PIECE WOOD BLOCKOUT OPTION

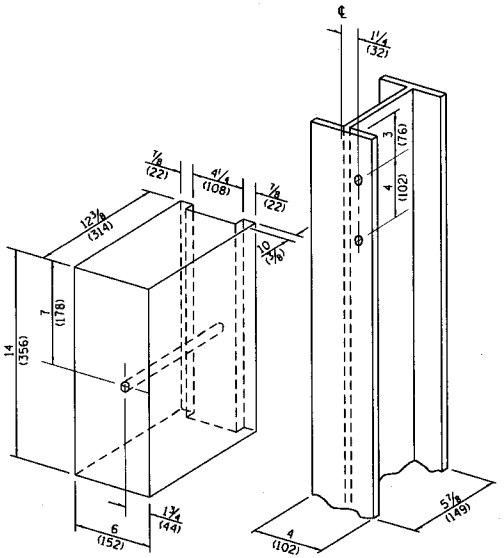

Note:
All holes ¾ (20) dia.

WOOD BLOCK-OUT AND STEEL POST DETAILS

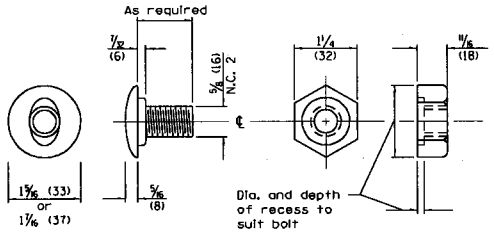

POST OR SPLICE BOLT & NUT

STEEL PLATE BEAM GUARDRAIL

(Sheet 2 of 4)

STANDARD 630001-10

VARIOUS LOCATIONS	COUNTY HIGHWAY: VARIOUS	COUNTY OF COOK DEPARTMENT OF TRANSPORTATION AND HIGHWAYS	COMPUTED: KLP DRAWN: KLP CHECKED: HPS	REVISIONS	DATE MM/DD/YR	PROJECT NAME – PROJECT LIMITS	C-27
	FISCAL YEAR: 2015					STANDARDS	SCALE: NONE SHEET
	SECTION: 14-PPRPS_01-PV						

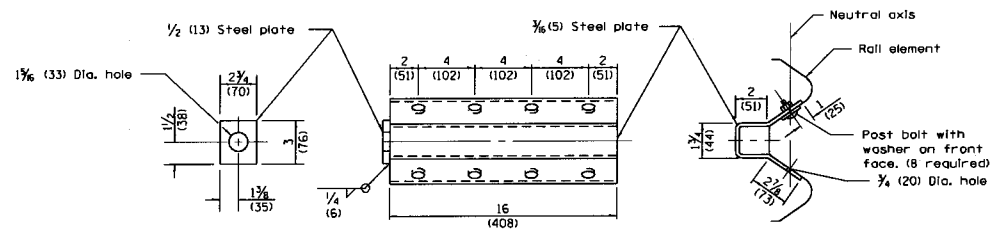

NOTE
Anchor plate T shall be used to attach cable assembly to guardrail when required on traffic barrier terminals.

ANCHOR PLATE T DETAILS

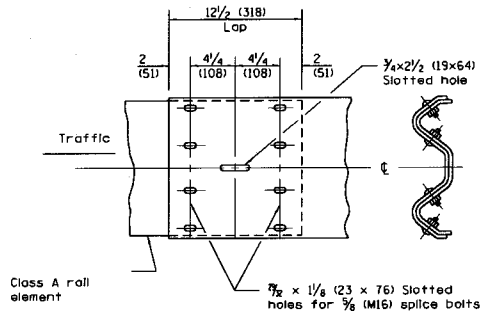

RAIL ELEMENT SPLICE

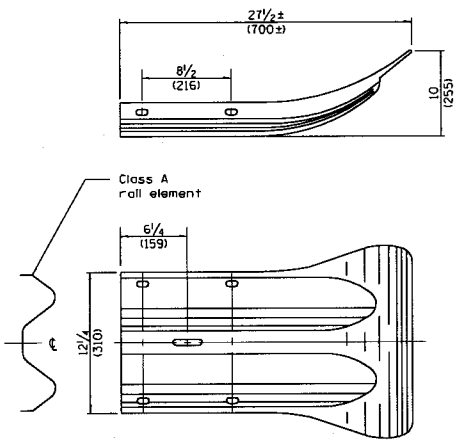

END SECTION

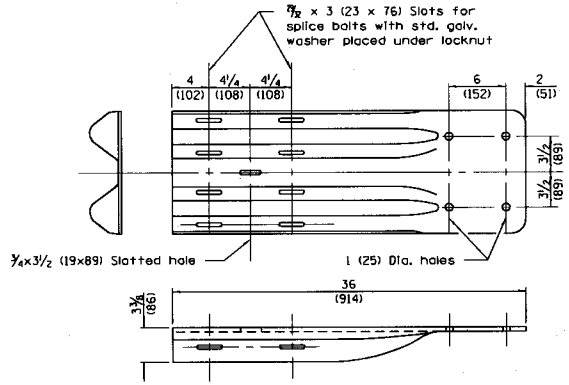

NOTE
When end shoe is attached to a bridge parapet which has an expansion joint, the bolts shall be provided with a locknut or double nut and shall be tightened only to a point that will allow guardrail movement.

The standard end shoe shall be attached to the concrete with pre-drilled or self-drilling anchor bolts. The anchor cone shall be set flush with the surface of the concrete.

Externally threaded studs protruding from the surface of the concrete will not be permitted.

END SHOE

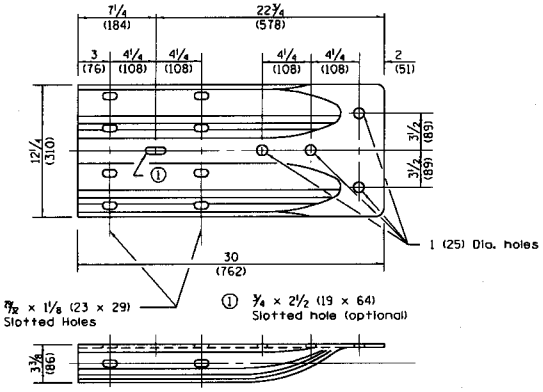

ALTERNATE END SHOE

STEEL PLATE BEAM GUARDRAIL

(Sheet 3 of 4)

STANDARD 630001-10

VARIOUS LOCATIONS	COUNTY HIGHWAY: VARIOUS FISCAL YEAR: 2015 SECTION: 14-PPRPS_01-PV	COUNTY OF COOK DEPARTMENT OF TRANSPORTATION AND HIGHWAYS	COMPUTED: KLP DRAWN: KLP CHECKED: HPS	REVISIONS	DATE MM/DD/YR	PROJECT NAME - PROJECT LIMITS STANDARDS	C-28 SCALE: NONE SHEET	

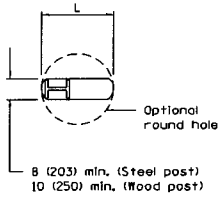

PLAN

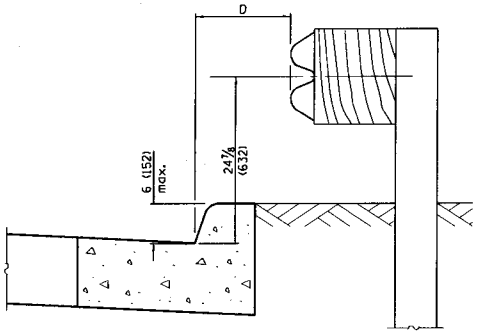

0 ≤ D < 4'–0" (1.2 m)

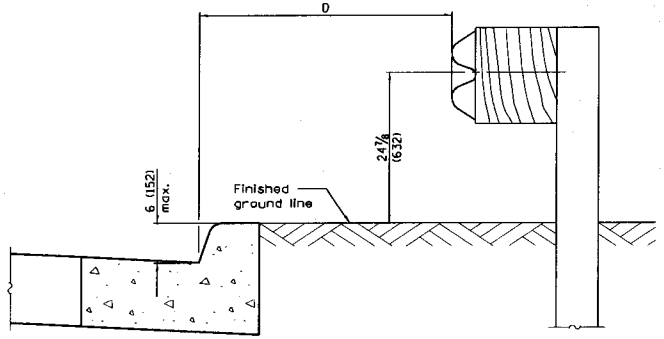

4'–0" (1.2 m) ≤ D ≤ 12'–0" (3.7 m)

GUARDRAIL PLACED BEHIND CURB

Note: 'D' shall not exceed 6 (152) for design speeds greater than 45 mph.

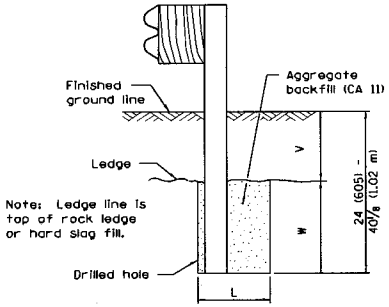

ELEVATION

FOOTING FOR POST WHEN IMPERVIOUS MATERIAL IS ENCOUNTERED

V	W	L	
		Steel Post	Wood Post
0 - 6 (0 - 152)	24 (610)	21 (530)	23 (580)
> 6 - 18 (> 152 - 458)	18 (458)	14½ (368)	16½ (419)
> 18 - 31 (> 458 - 787)	12 (305)	8 (203)	10 (250)
> 31 - 40⅞ (> 787 - 1.02 m)	12 - 0 (305 - 0)	8 (203)	10 (250)

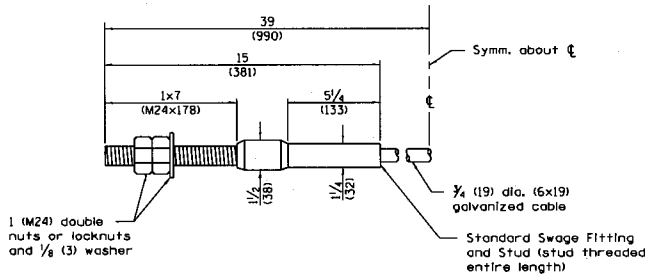

CABLE ASSEMBLY

(40,000 lbs. (18,100 kg) min. breaking strength)
Tighten to taut tension.

STEEL PLATE BEAM GUARDRAIL

(Sheet 4 of 4)

STANDARD 630001–10

VARIOUS LOCATIONS	COUNTY HIGHWAY: VARIOUS	COUNTY OF COOK DEPARTMENT OF TRANSPORTATION AND HIGHWAYS	COMPUTED: KLP DRAWN: KLP CHECKED: HPS	REVISIONS	DATE MM/DD/YR	PROJECT NAME – PROJECT LIMITS
	FISCAL YEAR: 2015					STANDARDS
	SECTION: 14-PPRPS_01-PV					C–29 SCALE: NONE SHEET

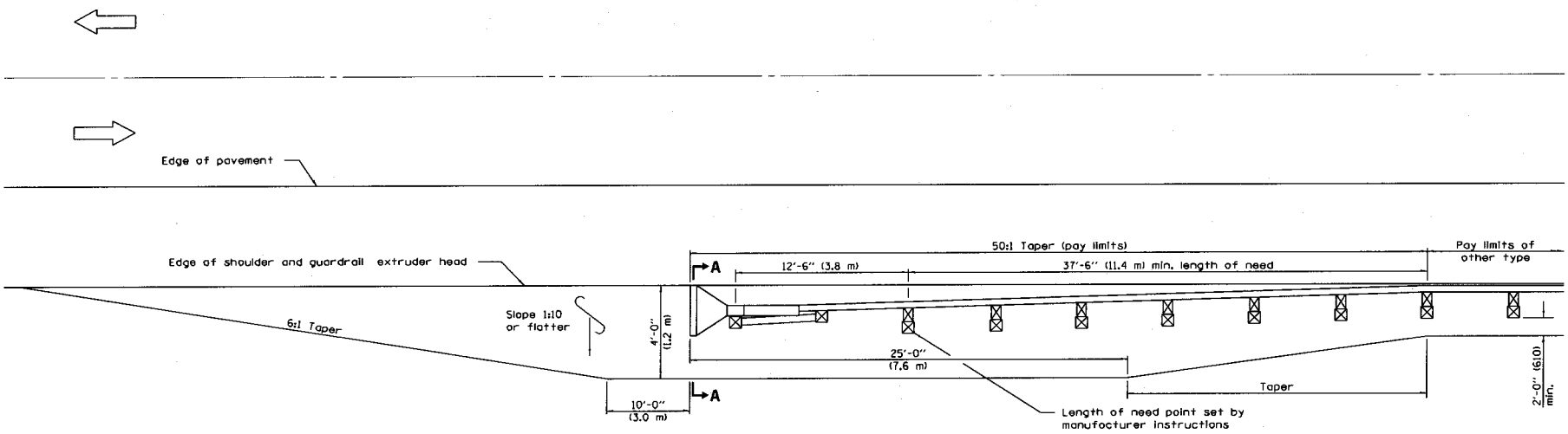

SHOULDER WIDENING TRANSITION FOR TANGENT TERMINAL

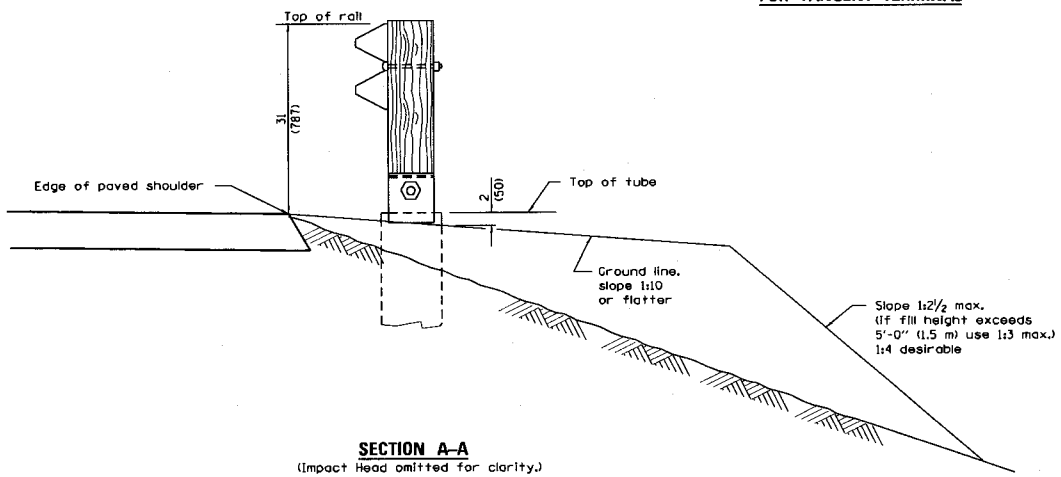

SECTION A–A

(Impact Head omitted for clarity.)

GENERAL NOTES

50:1 Taper required so the guardrail head will not encroach on the shoulder.

All slope ratios are expressed as units of vertical displacement to units of horizontal displacement (V:H).

All dimensions are in inches (millimeters) unless otherwise shown.

SHOULDER WIDENING FOR TYPE 1 (SPECIAL) GUARDRAIL TERMINALS

(Sheet 1 of 2)

STANDARD 630301–06

VARIOUS LOCATIONS	COUNTY HIGHWAY: VARIOUS FISCAL YEAR: 2015 SECTION: 14-PPRPS_01-PV	COUNTY OF COOK DEPARTMENT OF TRANSPORTATION AND HIGHWAYS	COMPUTED: KLP DRAWN: KLP CHECKED: HPS	REVISIONS	DATE MM/DD/YR	PROJECT NAME – PROJECT LIMITS STANDARDS	C–30 SCALE: NONE SHEET

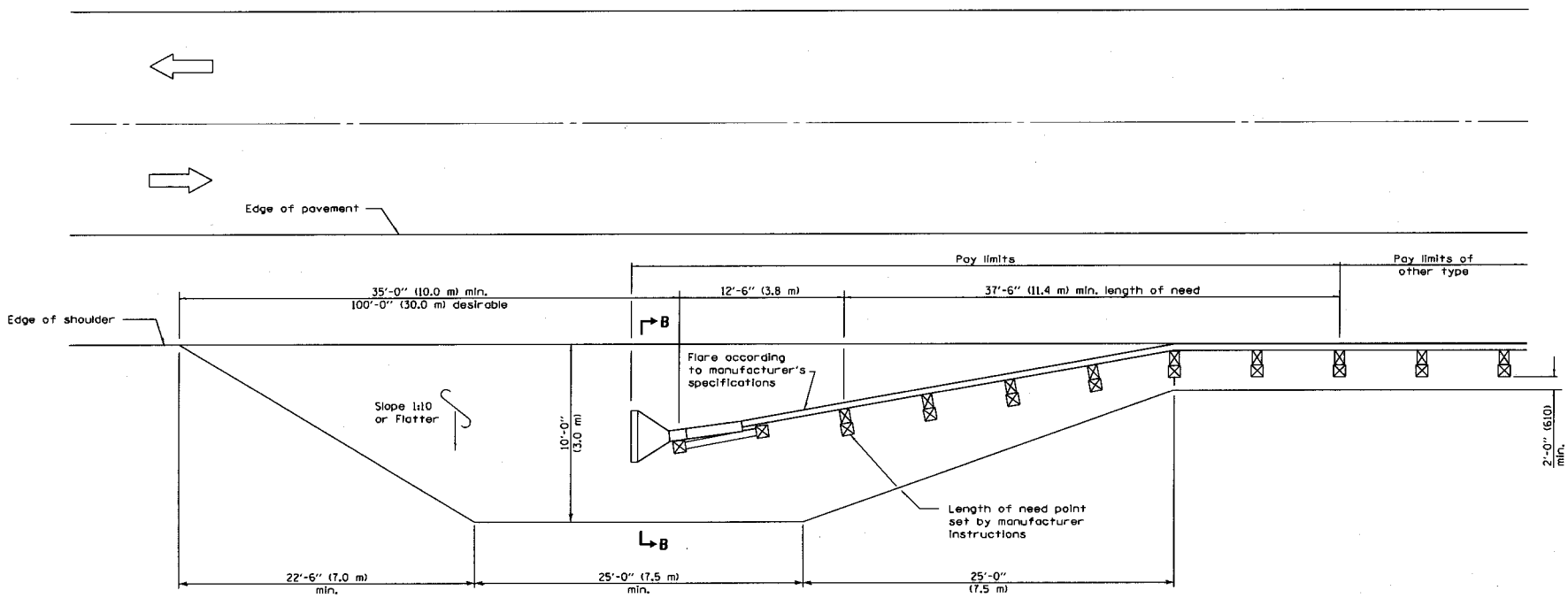

SHOULDER WIDENING TRANSITION FOR FLARED TERMINAL

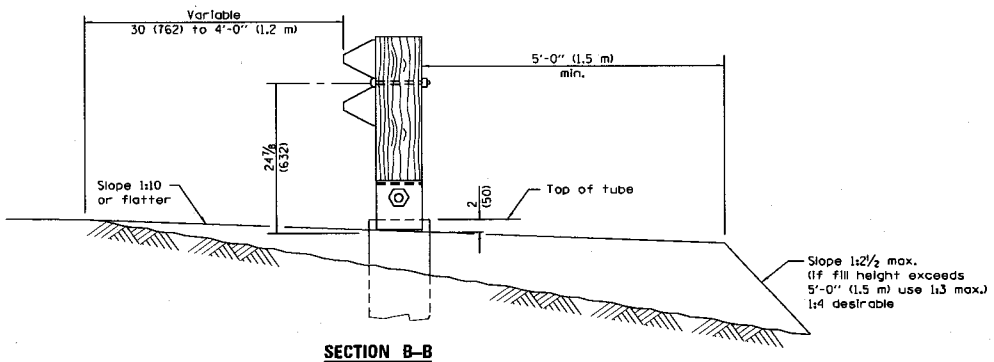

SECTION B–B
(Impact Head omitted for clarity.)

SHOULDER WIDENING FOR TYPE 1 (SPECIAL) GUARDRAIL TERMINALS

(Sheet 2 of 2)

STANDARD 630301–06

VARIOUS LOCATIONS	COUNTY HIGHWAY: VARIOUS		COUNTY OF COOK DEPARTMENT OF TRANSPORTATION AND HIGHWAYS	COMPUTED: KLP DRAWN: KLP CHECKED: HPS	REVISIONS	DATE MM/DD/YR	PROJECT NAME – PROJECT LIMITS	C–31
	FISCAL YEAR: 2015						STANDARDS	
	SECTION: 14-PPRPS_01-PV							SCALE: NONE SHEET

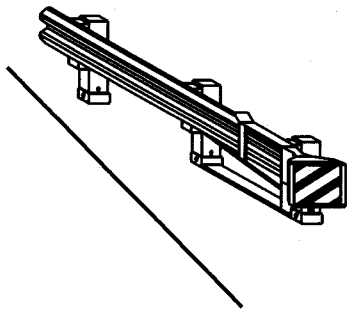

CASE I

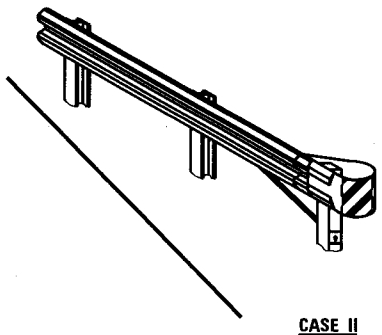

CASE II

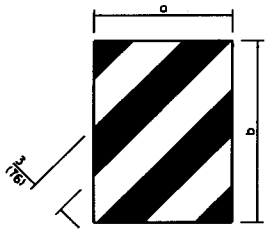

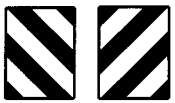

LEFT RIGHT

DIMENSION	CASE I	CASE II
a	*	18 (450)
b	*	16 (406)

* The width and height (a, b) of the terminal marker shall be within approximately 1 (25) of the outer edge of the terminal end, with a minimum reflective area of 288 sq. in. (0.18 m²).

TERMINAL MARKER DETAILS

Color: Black / Yellow reflectorized

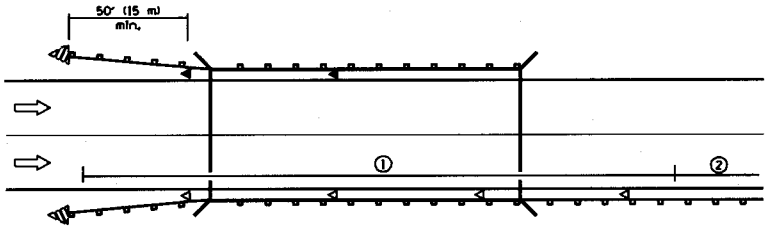

① Spacing 80 ft. (24 m) max. for first 400 ft. (122 m) or curve spacing shown in Standard 635001, whichever is less (min. 4 reflectors regardless of length).

② After 400 ft. (122 m), transition to normal delineator spacing shown in Standard 635001, and continue as required.

ONE-WAY TRAFFIC

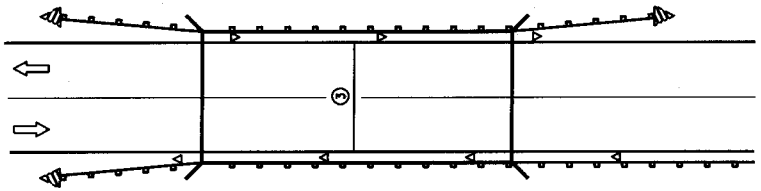

③ Bidirectional silver/silver should be used in lieu of monodirectional silver on both sides of two-lane bridges where the pavement is less than 24 (610) wider than the pavement approaching the bridge.

◁ Monodirectional crystal

◀ Monodirectional amber

Terminal Marker - Black/Yellow Left or Right as appropriate

TWO-WAY TRAFFIC

GUARDRAIL / BARRIER WALL / BRIDGE RAIL REFLECTIORS

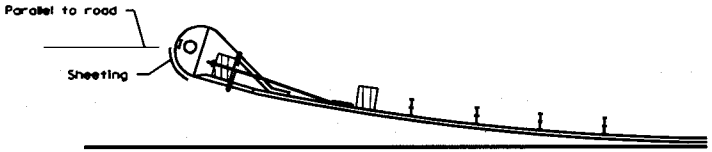

SHEETING POSITION: CASE II

All dimensions are in inches (millimeters) unless otherwise shown.

REFLECTOR AND TERMINAL MARKER PLACEMENT

STANDARD 635006-03

VARIOUS LOCATIONS	COUNTY HIGHWAY: VARIOUS	FISCAL YEAR: 2015	SECTION: 14-PRRPS_01-PV	COUNTY OF COOK DEPARTMENT OF TRANSPORTATION AND HIGHWAYS	COMPUTED: KLP DRAWN: KLP CHECKED: HPS	REVISIONS / DATE MM/DD/YR	PROJECT NAME – PROJECT LIMITS: STANDARDS	PM-2 SCALE: NONE SHEET

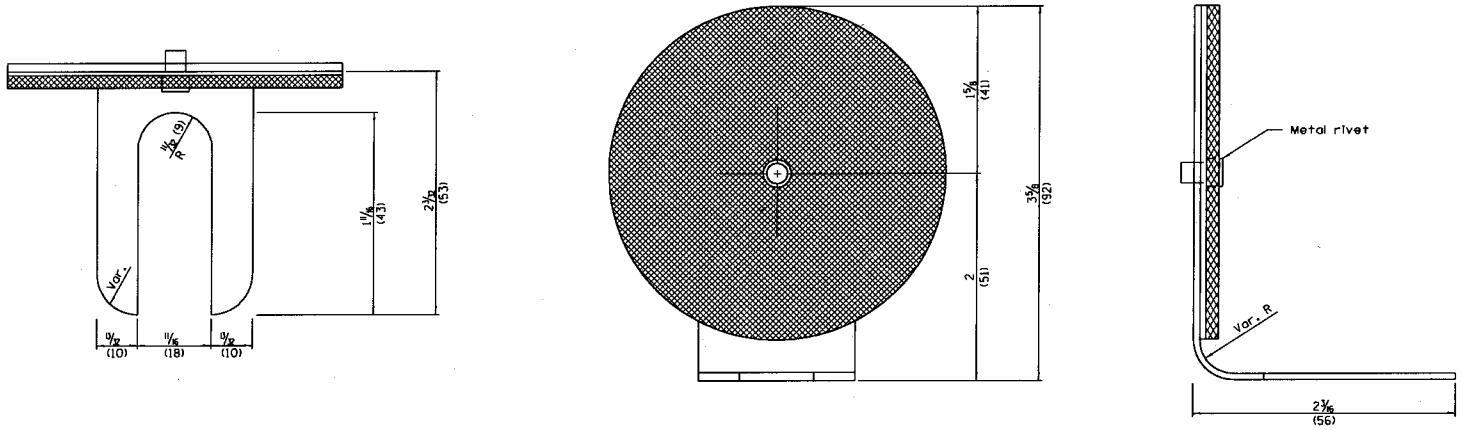

REFLECTOR MARKER TYPE A

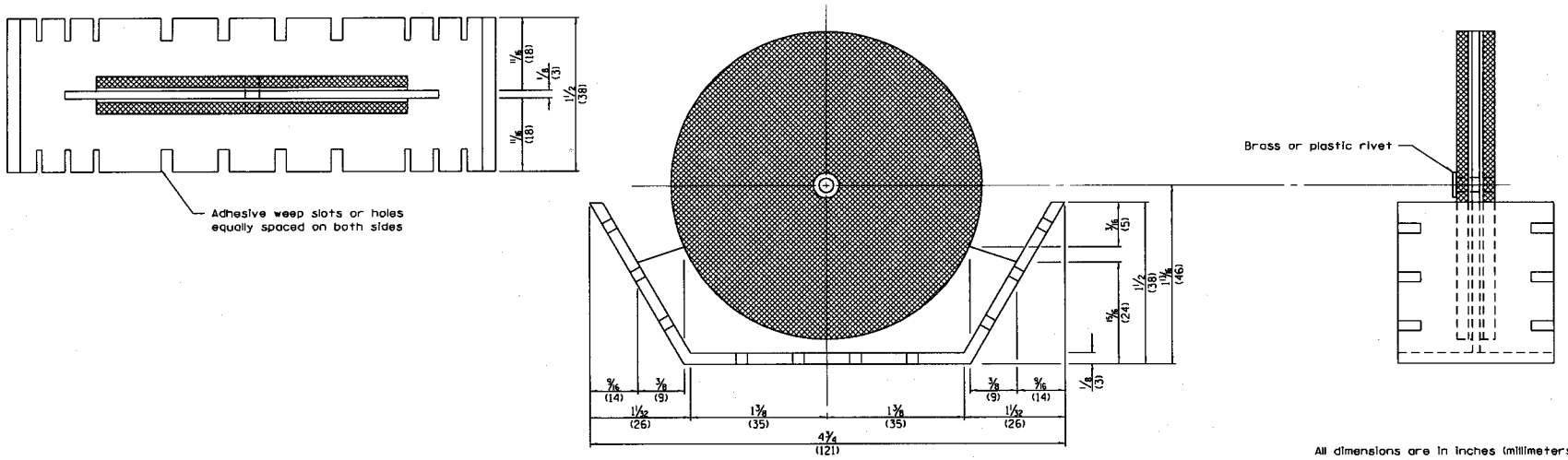

REFLECTOR MARKER TYPE B

All dimensions are in inches (millimeters) unless otherwise shown.

REFLECTOR MARKER AND MOUNTING DETAILS

(Sheet 1 of 3)

STANDARD 635011-02

VARIOUS LOCATIONS	COUNTY HIGHWAY: VARIOUS	COUNTY OF COOK DEPARTMENT OF TRANSPORTATION AND HIGHWAYS	COMPUTED: KLP	REVISIONS	DATE	PROJECT NAME – PROJECT LIMITS	PM-2
	FISCAL YEAR: 2015		DRAWN: KLP		MM/DD/YR	STANDARDS	SCALE: NONE SHEET
	SECTION: 14-PPRPS_01-PV		CHECKED: HPS				

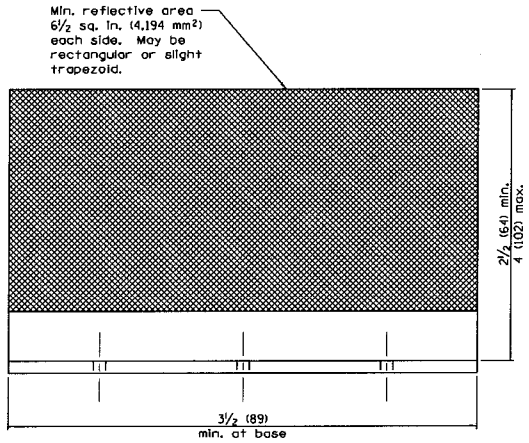

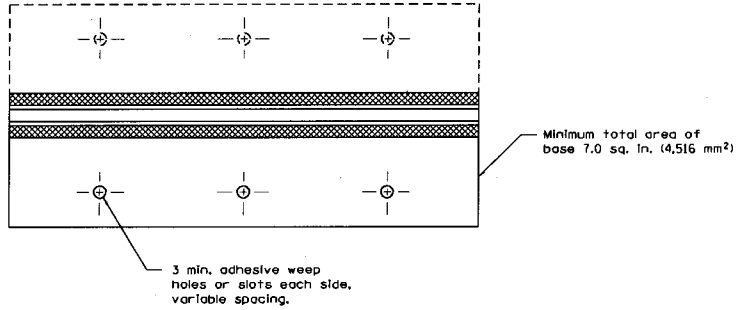

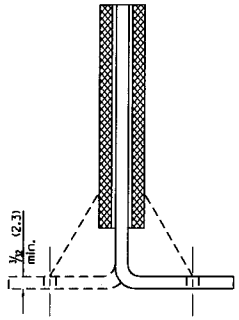

Cross section may be "T"
or "L" shaped and may have
side supports at ends.

REFLECTOR MARKER TYPE C

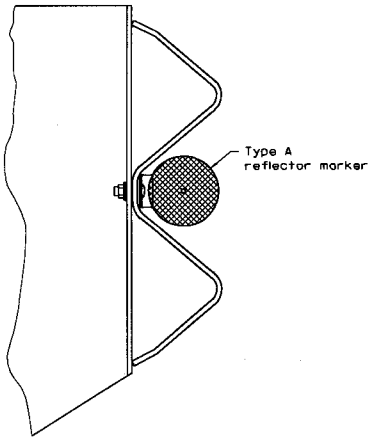

TYPICAL MOUNTING WITH REFLECTOR

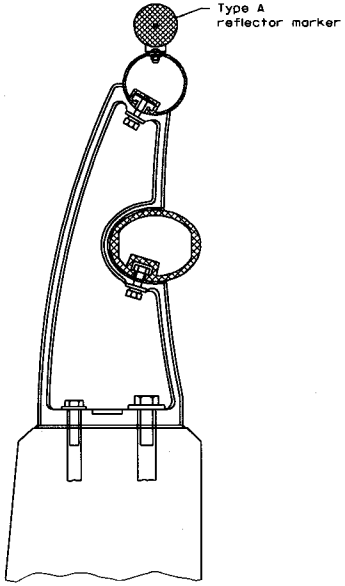

TYPICAL MOUNTING DETAIL
FOR BRIDGE RAIL REFLECTOR

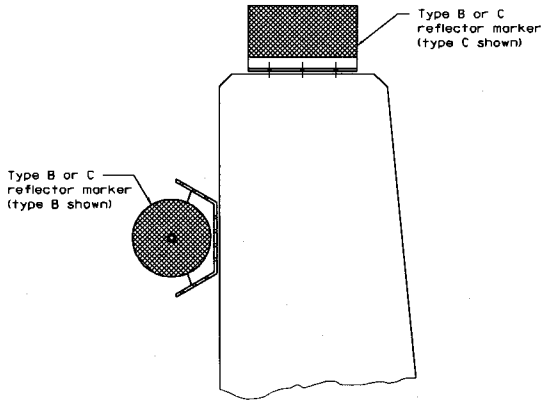

TYPICAL MOUNTING DETAIL
FOR BARRIER WALL REFLECTOR

REFLECTOR MARKER AND MOUNTING DETAILS

(Sheet 2 of 3)

STANDARD 635011-02

VARIOUS LOCATIONS	COUNTY HIGHWAY: VARIOUS	COUNTY OF COOK DEPARTMENT OF TRANSPORTATION AND HIGHWAYS	COMPUTED: KLP DRAWN: KLP CHECKED: HPS	REVISIONS	DATE MM/DD/YR	PROJECT NAME - PROJECT LIMITS STANDARDS	PM-3
	FISCAL YEAR: 2015						SCALE: NONE SHEET
	SECTION: 14-PPRPS_01-PV						

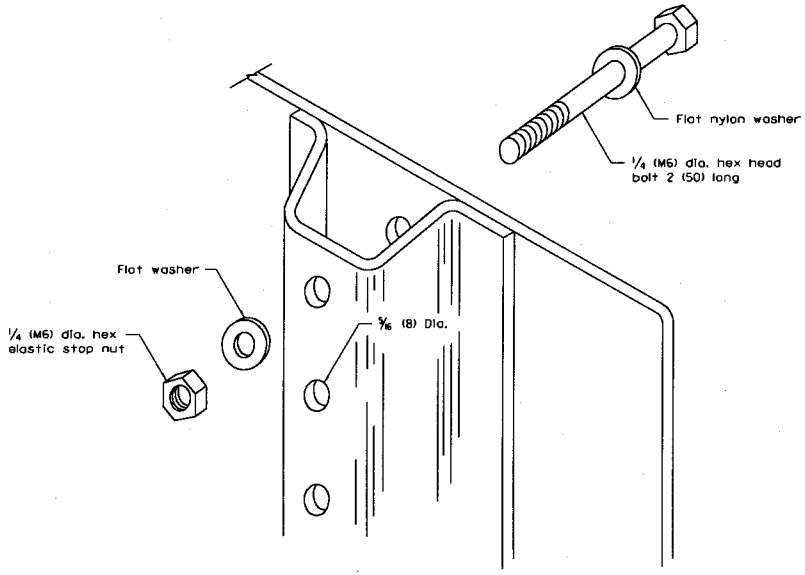

DETAIL OF MOUNTING TERMINAL MARKER TO POST

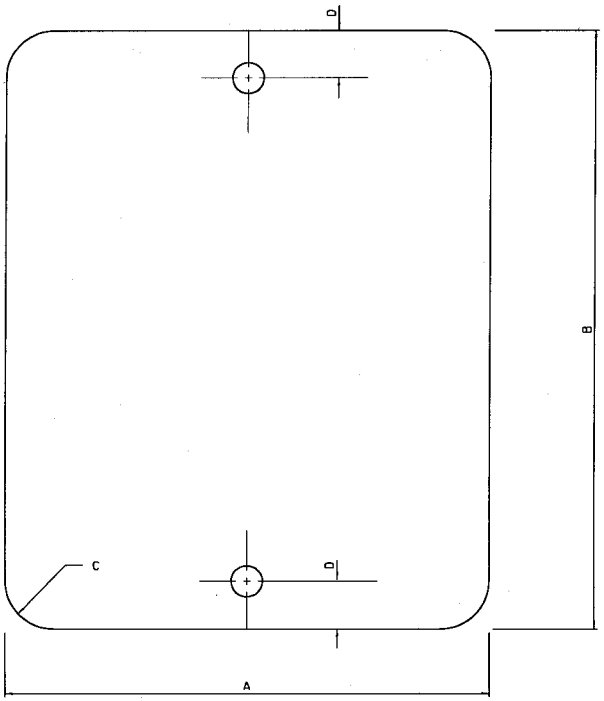

STANDARD TERMINAL MARKER

SIGN SIZE	DIMENSIONS			
	A	B	C	D
12x16 (305x406)	12.0 (305)	16.0 (406)	1.5 (38)	2.0 (50)

REFLECTOR MARKER AND MOUNTING DETAILS

(Sheet 3 of 3)

STANDARD 635011-02

VARIOUS LOCATIONS	COUNTY HIGHWAY: VARIOUS FISCAL YEAR: 2015 SECTION: 14-PPRPS-01-PV	COUNTY OF COOK DEPARTMENT OF TRANSPORTATION AND HIGHWAYS	COMPUTED: KLP DRAWN: KLP CHECKED: HPS	REVISIONS	DATE MM/DD/YR	PROJECT NAME - PROJECT LIMITS STANDARDS	PM-4 SCALE: NONE SHEET

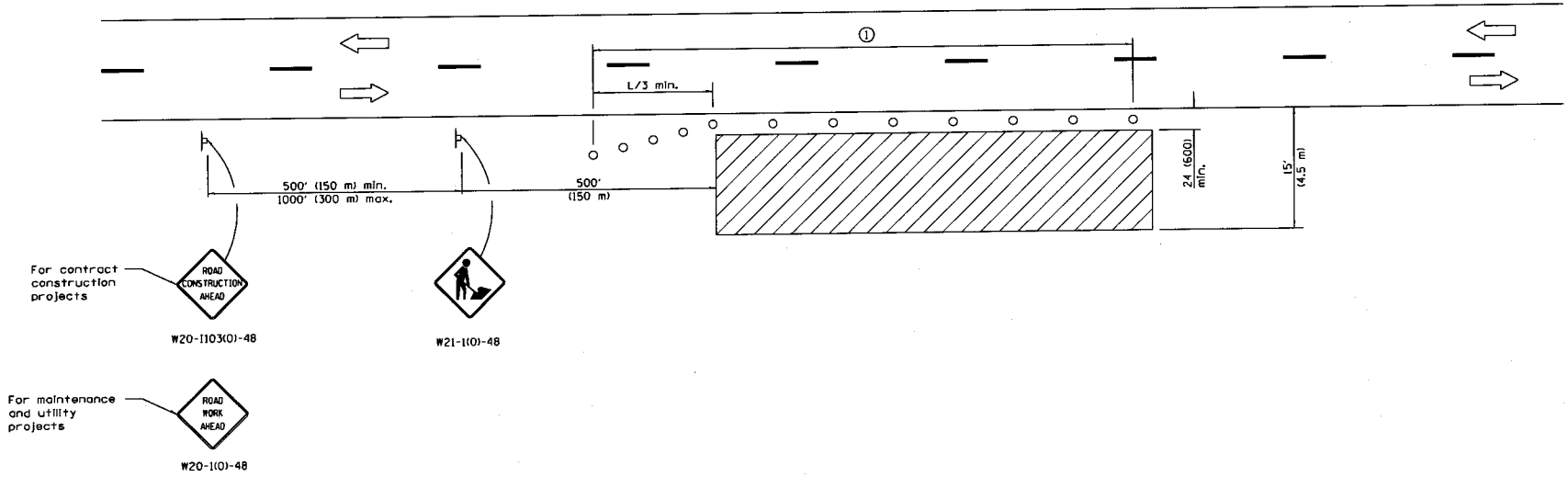

TYPICAL APPLICATIONS

Utility operations
Culvert extensions
Side slope changes
Guardrail installation and maintenance
Delineator installation
Landscaping operations
Shoulder repair
Sign installation and maintenance

SYMBOLS

Work area

Sign

Cone, drum or barricade

① When the work operation exceeds one hour, cones, drums or barricades shall be placed at 25' (8 m) centers for L/3 distance, and at 50' (15 m) centers through the remainder of the work area.

GENERAL NOTES

This Standard is used where any vehicles, equipment, workers or their activities will encroach in the area 15' (4.5 m) to 24 (600) from the edge of pavement.

Calculate L as follows:

SPEED LIMIT	FORMULAS English	FORMULAS (Metric)
40 mph (70 km/h) or less:	$L=\frac{WS^2}{60}$	$L=\frac{WS^2}{150}$
45 mph (80 km/h) or greater:	L=(W)(S)	L=0.65(W)(S)

W = Width of offset in feet (meters).

S = Normal posted speed mph (km/h).

All dimensions are in inches (millimeters) unless otherwise shown.

DATE	REVISIONS
1-1-14	Revised workers sign
	number to agree with
	current MUTCD.
1-1-13	Omitted text 'WORKERS'
	sign.

OFF-RD OPERATIONS, 2L, 2W, 15' (4.5 m) TO 24" (600 mm) FROM PAVEMENT EDGE

STANDARD 701006-05

Illinois Department of Transportation

APPROVED January 1, 2014
ENGINEER OF SAFETY ENGINEERING

APPROVED January 1, 2014
ENGINEER OF DESIGN AND ENVIRONMENT

ISSUED 1-1-97

VARIOUS LOCATIONS

COUNTY HIGHWAY: VARIOUS
FISCAL YEAR: 2015
SECTION: 14-PPRPS-01-PV

COUNTY OF COOK
DEPARTMENT OF TRANSPORTATION AND HIGHWAYS

COMPUTED: KLP
DRAWN: KLP
CHECKED: HPS

REVISIONS | DATE MM/DD/YR

PROJECT NAME – PROJECT LIMITS

STANDARDS

PM-5

SCALE: NONE SHEET

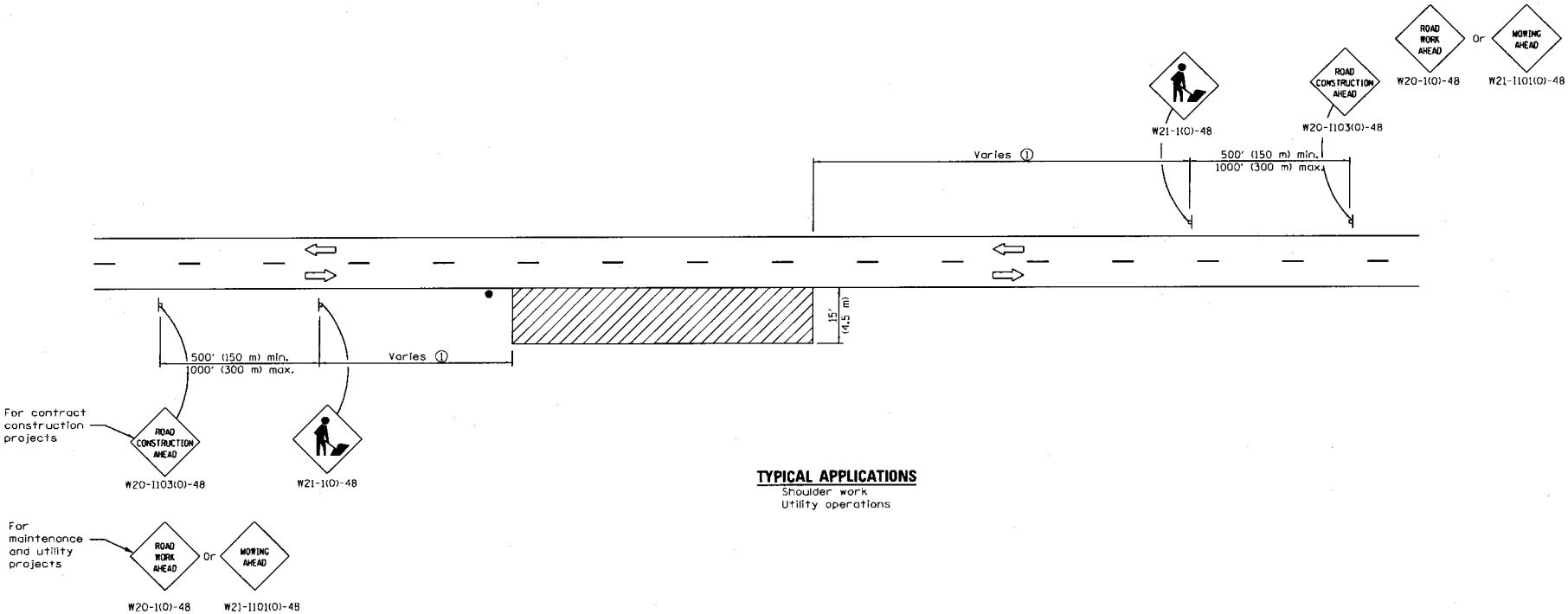

TYPICAL APPLICATIONS

Shoulder work
Utility operations

① Minimum distance is 200' (60 m). Maximum distance to be determined by the Engineer but should not exceed ½ the length required for one normal working day's operation, or 4 miles (6.4 km) whichever is less.

SYMBOLS

Work area

Sign

Flagger with traffic control sign when required

GENERAL NOTES

This Standard is used where at any time, any vehicle, equipment, workers or their activities require an intermittent or continuous moving operation on the shoulder, where the average speed is 1 mph (2 km/h) or less.

When the work operation does not exceed 60 minutes, traffic control may be according to Standard 701301.

All dimensions are in inches (millimeters) unless otherwise shown.

OFF-RD MOVING OPERATIONS, 2L, 2W, DAY ONLY

STANDARD 701011-04

VARIOUS LOCATIONS	COUNTY HIGHWAY: VARIOUS	COUNTY OF COOK DEPARTMENT OF TRANSPORTATION AND HIGHWAYS	COMPUTED: KLP	REVISIONS	DATE	PROJECT NAME – PROJECT LIMITS	PM-6
	FISCAL YEAR: 2015		DRAWN: KLP		MM/DD/YR	STANDARDS	SCALE: NONE SHEET
	SECTION: 14-PPRPS_01-PV		CHECKED: HPS				

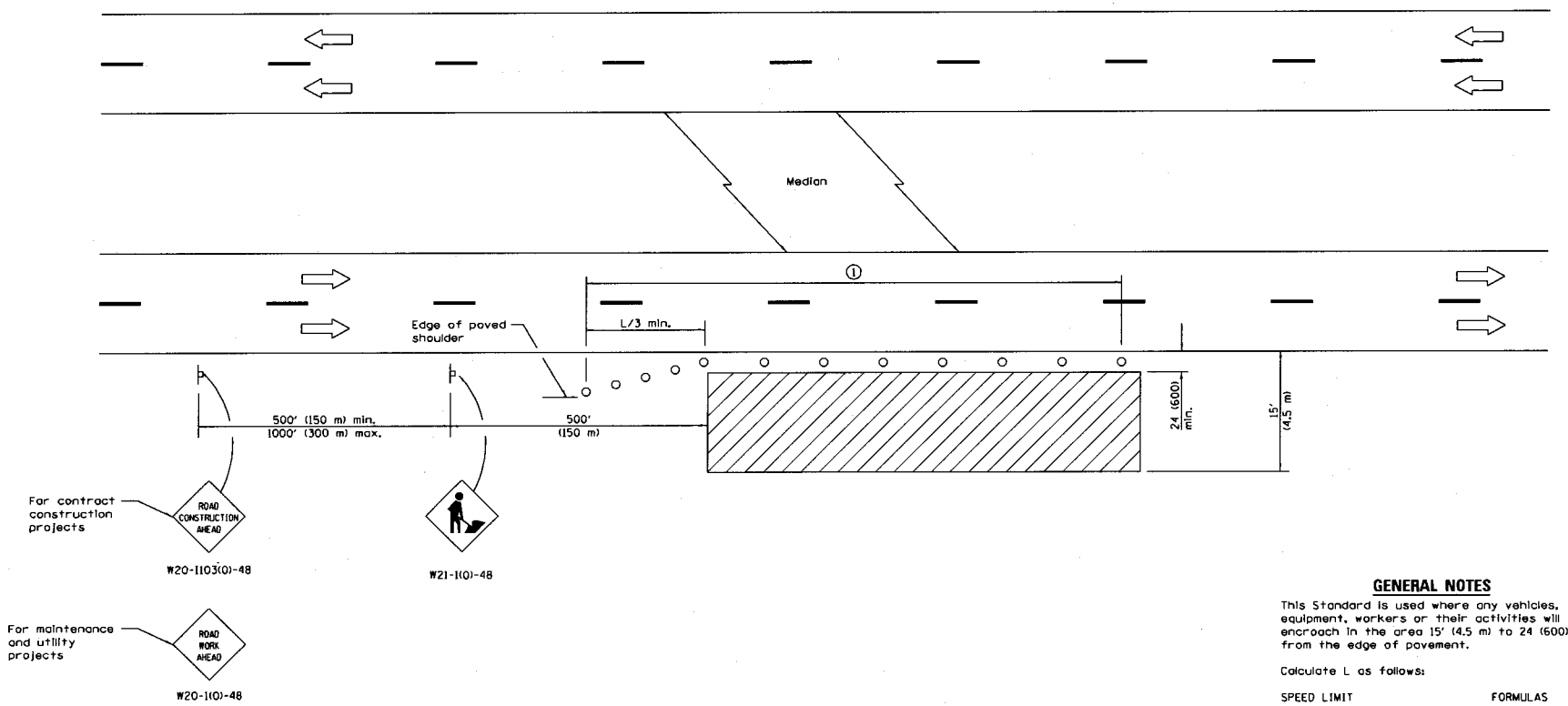

TYPICAL APPLICATIONS

Utility operations
Culvert extensions
Side slope changes
Guardrail installation and maintenance
Delineator installation
Landscaping operations
Shoulder repair
Sign installation and maintenance

① When the work operation exceeds one hour, cones, drums or barricades shall be placed at 25' (8 m) centers for L/3 distance, and at 50' (15 m) centers through the remainder of the work area.

SYMBOLS

Work area

Sign

Cone, drum or barricade

GENERAL NOTES

This Standard is used where any vehicles, equipment, workers or their activities will encroach in the area 15' (4.5 m) to 24 (600) from the edge of pavement.

Calculate L as follows:

SPEED LIMIT	FORMULAS English	FORMULAS (Metric)
40 mph (70 km/h) or less:	$L=\frac{WS^2}{60}$	$L=\frac{WS^2}{150}$
45 mph (80 km/h) or greater:	L=(W)(S)	L=0.65(W)(S)

W = Width of offset in feet (meters).

S = Normal posted speed mph (km/h).

All dimensions are in inches (millimeters) unless otherwise shown.

OFF-RD OPERATIONS, MULTILANE, 15' (4.5 m) TO 24 " (600 mm) FROM PAVEMENT EDGE

STANDARD 701101-04

VARIOUS LOCATIONS	COUNTY HIGHWAY: VARIOUS	FISCAL YEAR: 2015	SECTION: 14-PPRPS.01-PV	COUNTY OF COOK DEPARTMENT OF TRANSPORTATION AND HIGHWAYS	COMPUTED: KLP DRAWN: KLP CHECKED: HPS	REVISIONS / DATE MM/DD/YR	PROJECT NAME - PROJECT LIMITS / STANDARDS	PM-7 SCALE: NONE SHEET

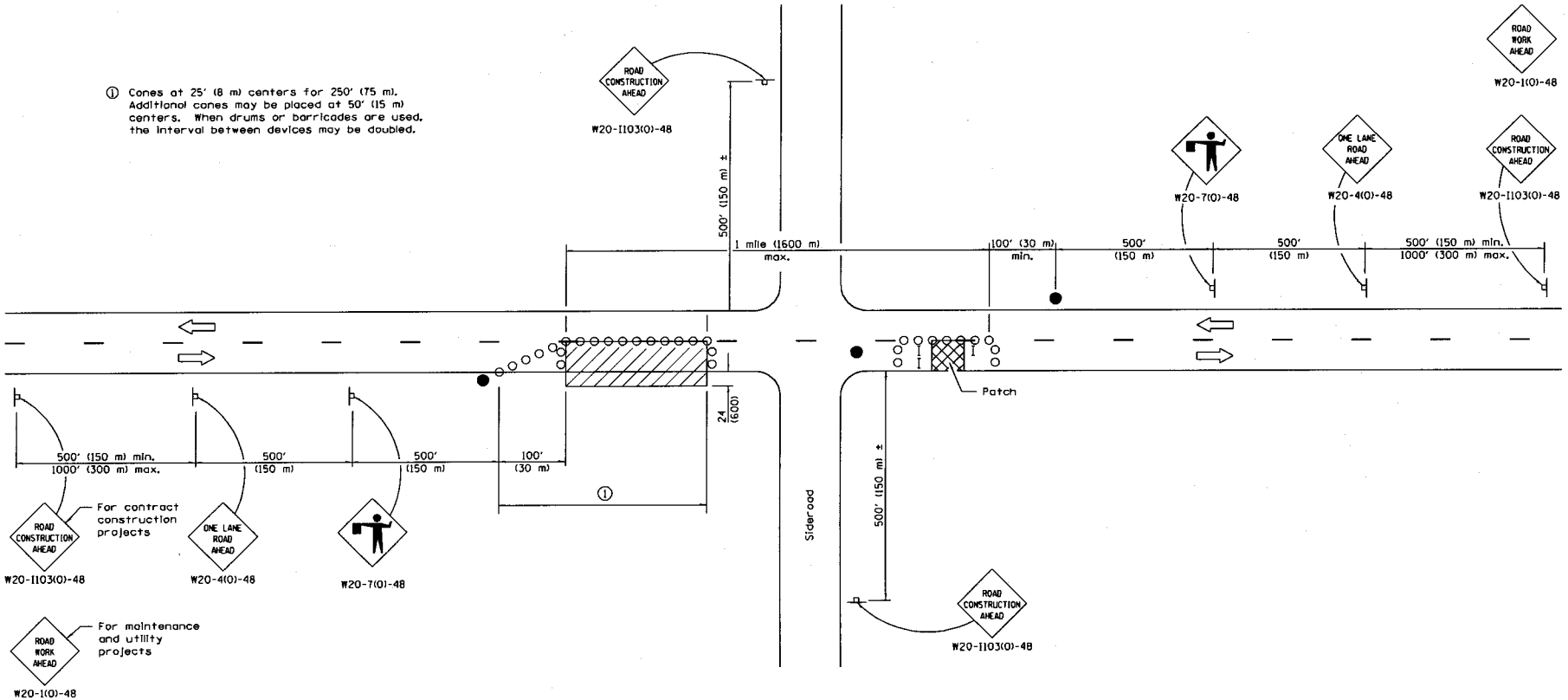

SYMBOLS

- Work area
- Sign
- Barricade or drum
- Cone, drum or barricade
- Flagger with traffic control sign

TYPICAL APPLICATIONS

Isolated patching
Utility operations
Storm sewer
Culverts
Cable placement

GENERAL NOTES

This Standard is used where at any time, any vehicles, equipment, workers or their activities will encroach in the area between the center line and a line 24 (600) outside the edge of pavement for daylight operation.

When the distance between successive work areas exceeds 2000' (600 m), additional warning signs, flaggers, and taper shall be placed as shown.

All dimensions are in inches (millimeters) unless otherwise shown.

LANE CLOSURE, 2L, 2W, DAY ONLY, FOR SPEEDS ≥ 45 MPH

STANDARD 701201-04

VARIOUS LOCATIONS	COUNTY HIGHWAY: VARIOUS	COUNTY OF COOK DEPARTMENT OF TRANSPORTATION AND HIGHWAYS	COMPUTED: KLP DRAWN: KLP CHECKED: HPS	REVISIONS	DATE MM/DD/YR	PROJECT NAME - PROJECT LIMITS	PM-8
	FISCAL YEAR: 2015					STANDARDS	
	SECTION: 14-PPRPS_01-PV						SCALE: NONE SHEET

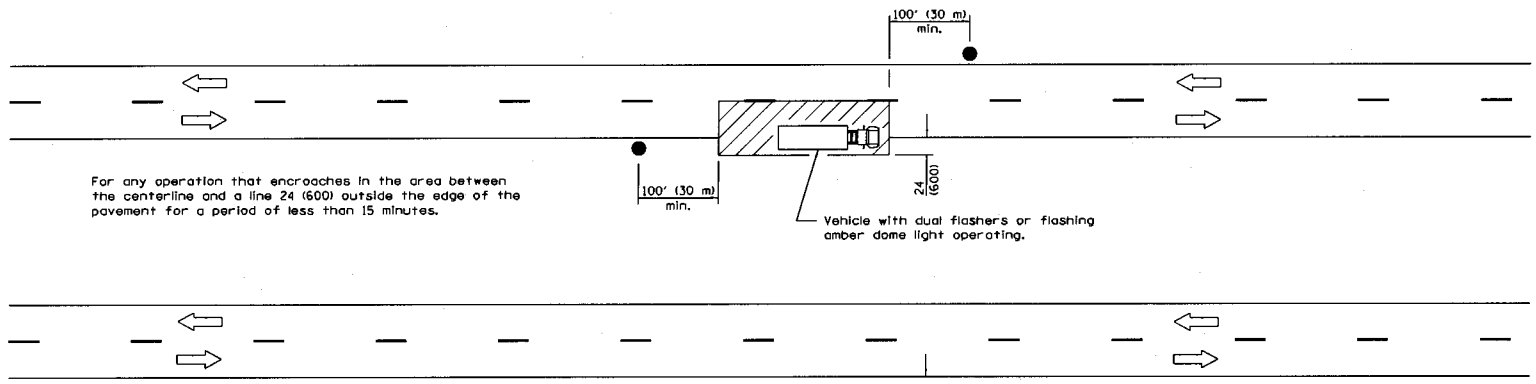

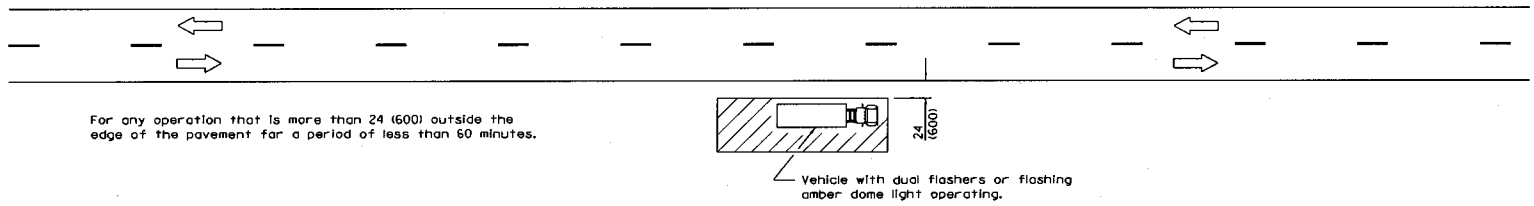

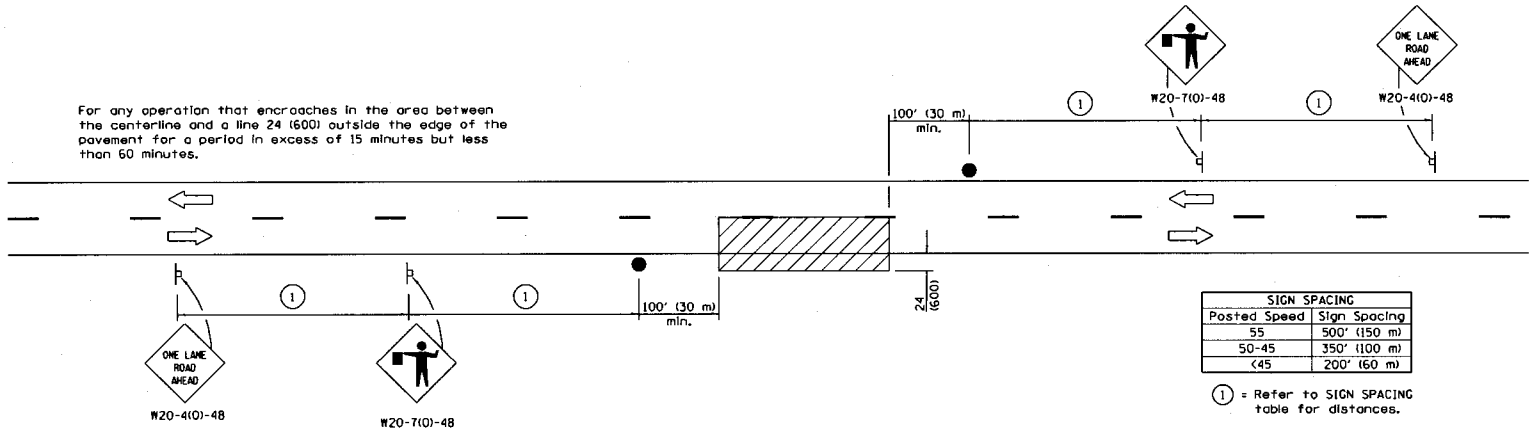

SIGN SPACING	
Posted Speed	Sign Spacing
55	500' (150 m)
50-45	350' (100 m)
<45	200' (60 m)

(1) = Refer to SIGN SPACING table for distances.

All dimensions are in inches (millimeters) unless otherwise shown.

TYPICAL APPLICATIONS

- Marking patches
- Field survey
- String line
- Utility operations
- Cleaning up debris on pavement

SYMBOLS

- Work area
- Sign on portable or permanent support
- Flagger with traffic control sign

LANE CLOSURE, 2L, 2W, SHORT TIME OPERATIONS

STANDARD 701301-04

VARIOUS LOCATIONS	COUNTY HIGHWAY: VARIOUS	COUNTY OF COOK DEPARTMENT OF TRANSPORTATION AND HIGHWAYS	COMPUTED: KLP DRAWN: KLP CHECKED: HPS	REVISIONS / DATE MM/DD/YR	PROJECT NAME - PROJECT LIMITS	PM-9
	FISCAL YEAR: 2015				STANDARDS	SCALE: NONE SHEET
	SECTION: 14-PPRPS_01-PV					

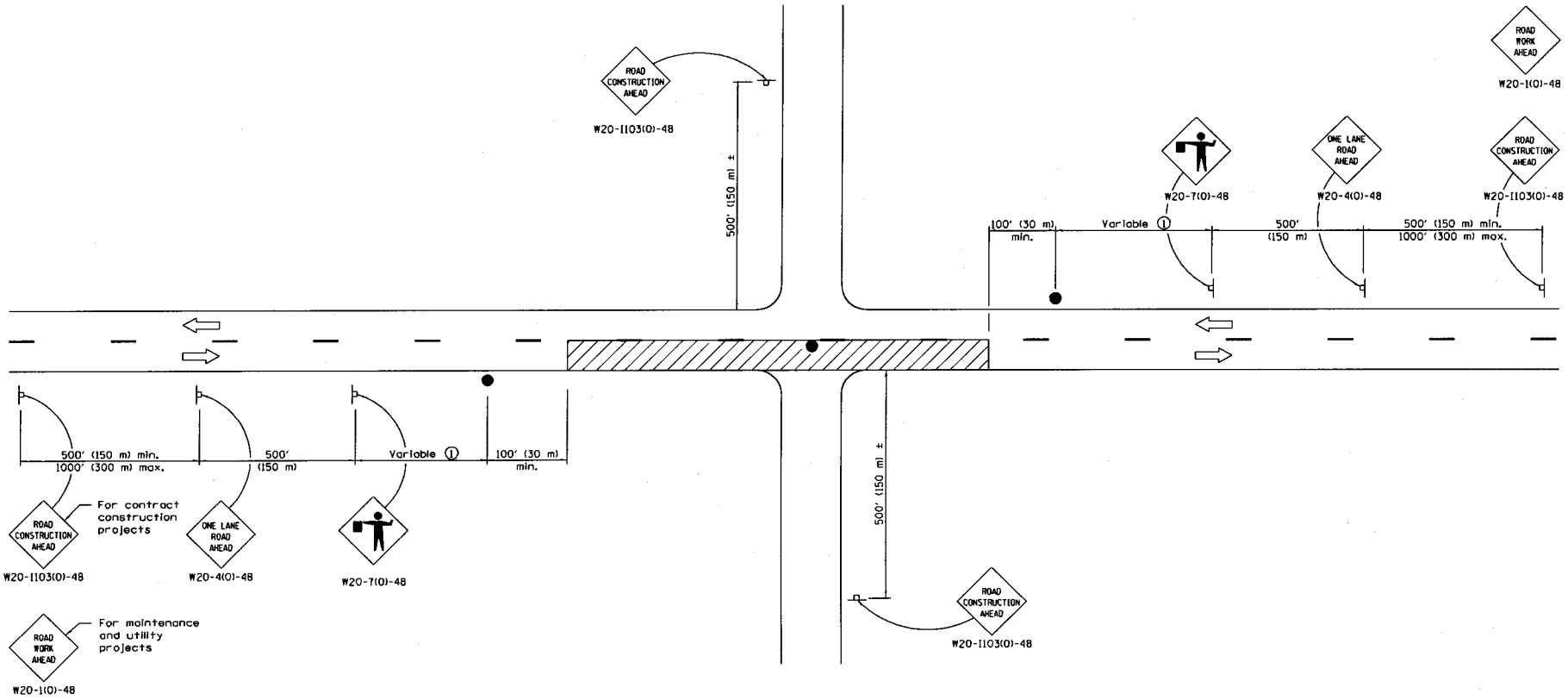

TYPICAL APPLICATIONS

Bituminous resurfacing
Milling operations
Utility operations
Shoulder operations

① Minimum distance is 200' (60 m). Maximum distance to be determined by the Engineer but should not exceed ½ the length required for one normal working day's operation or 2 miles (3200 m), whichever is less.

SYMBOLS

Work area

Sign on portable or permanent support

Flagger with traffic control sign

GENERAL NOTES

This Standard is used where at any time, any vehicle, equipment, workers or their activities require an intermittent or continuous moving operation on the pavement where the average speed of movement is greater than 1 mph (2 km/h) and less than 4 mph (6 km/h).

When the operation does not exceed 60 minutes, traffic control may be according to Standard 701301.

All dimensions are in inches (millimeters) unless otherwise shown.

LANE CLOSURE, 2L, 2W, SLOW MOVING OPERATIONS DAY ONLY, FOR SPEEDS ≥ 45 MPH

STANDARD 701306-03

VARIOUS LOCATIONS	COUNTY HIGHWAY: VARIOUS	COUNTY OF COOK DEPARTMENT OF TRANSPORTATION AND HIGHWAYS	COMPUTED: KLP DRAWN: KLP CHECKED: HPS	REVISIONS	DATE MM/DD/YR	PROJECT NAME – PROJECT LIMITS	PM-10
	FISCAL YEAR: 2015					STANDARDS	
	SECTION: 14-PPRPS_01-PV						SCALE: NONE SHEET

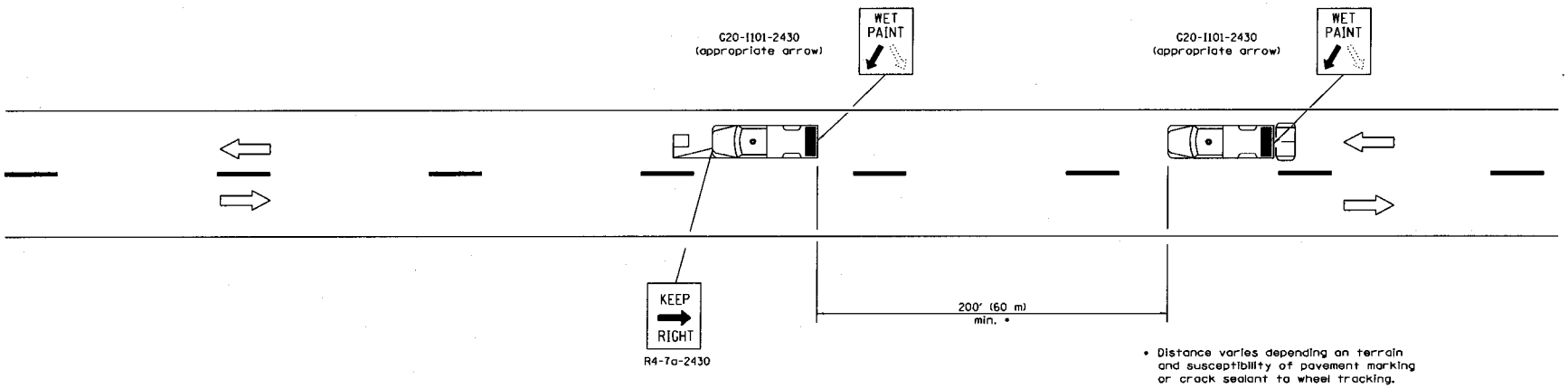

* Distance varies depending on terrain and susceptibility of pavement marking or crack sealant to wheel tracking.

TYPICAL APPLICATIONS

Landscaping work
Utility work
Pavement marking
Weed spraying
Roadometer measurements
Debris cleanup
Crack pouring

SYMBOLS

Arrow board (Hazard Mode only)

Truck with headlights, emergency flashers and flashing amber light. (visible from all directions)

18x18 (450x450) min. orange flag (use when guide wheel is used)

Truck mounted attenuator

GENERAL NOTES

This Standard is used where any vehicle, equipment, workers or their activities will require a continuous moving operation where the average speed is greater than 3 mph (5 km/h).

For shoulder operations not encroaching on the pavement, use DETAIL A, Standard 701426.

All dimensions are in inches (millimeters) unless otherwise shown.

LANE CLOSURE 2L, 2W MOVING OPERATIONS– DAY ONLY

STANDARD 701311–03

VARIOUS LOCATIONS	COUNTY HIGHWAY: VARIOUS	COUNTY OF COOK DEPARTMENT OF TRANSPORTATION AND HIGHWAYS	COMPUTED: KLP DRAWN: KLP CHECKED: HPS	REVISIONS	DATE MM/DD/YR	PROJECT NAME – PROJECT LIMITS	PM–11
	FISCAL YEAR: 2015					STANDARDS	SCALE: NONE SHEET
	SECTION: 14-PPRPS_01-PV						

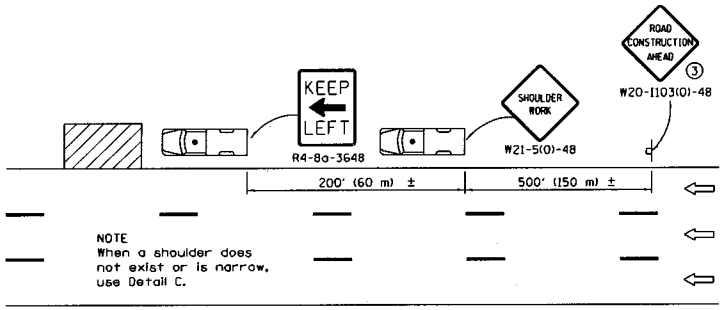

DETAIL A

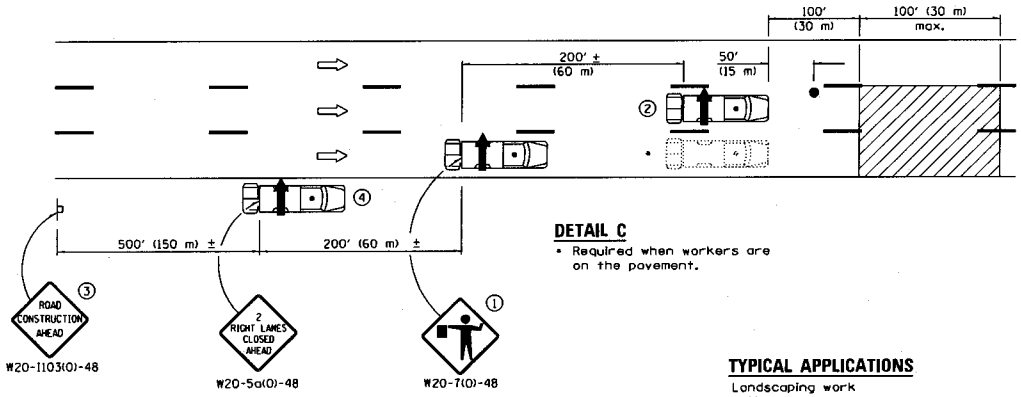

DETAIL C

- Required when workers are on the pavement.

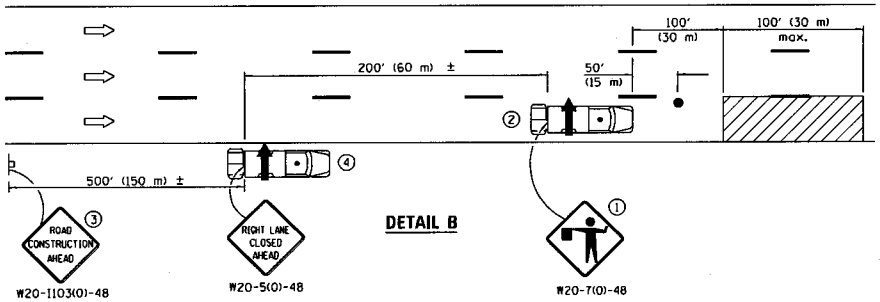

DETAIL B

TYPICAL APPLICATIONS

Landscaping work
Utility work
Pavement marking
Weed spraying
Roadometer measurements
Debris cleanup
Crack pouring

① Flaggers are required when workers are on the pavement.

② For striping operations only. See sign arrow detail on this standard.

③ For stationary operations which are on the roadway or shoulder, greater than 15 minutes and up to 1 hour.

④ Omit truck, attenuator and arrow board when no shoulder exists due to curb and gutter.

G20-1101-2430
(appropriate arrow)
②(when striping only)

GENERAL NOTES

This Standard is used where any vehicle, equipment, workers or their activities will require: 1) stationary operations up to 1 hour, or 2) a continuous or intermittent moving operation where the average speed of movement is greater than 1 mph (2 km/h).

This Standard is also applicable when work is being performed in the left lane(s) or on the median shoulder. Under these conditions, KEEP RIGHT signs shall be substituted for KEEP LEFT signs and arrow board indications shall be directed to the right.

The distance between work and shadow vehicles may very according to terrain or paint / crack sealing time.

All dimensions are in inches (millimeter) unless otherwise shown.

SYMBOLS

- Arrow board
- Work area
- Truck with flashing amber light
- Truck/Trailer mounted attenuator
- Flagger with traffic control sign
- Sign

LANE CLOSURE, MULTILANE, INTERMITTENT OR MOVING OPER., FOR SPEEDS ≤ 40 MPH

STANDARD 701427-03

VARIOUS LOCATIONS	COUNTY HIGHWAY: VARIOUS		COUNTY OF COOK	COMPUTED: KLP	REVISIONS	DATE MM/DD/YR	PROJECT NAME – PROJECT LIMITS	PM-12
	FISCAL YEAR: 2015		DEPARTMENT OF TRANSPORTATION AND HIGHWAYS	DRAWN: KLP			STANDARDS	
	SECTION: 14-PPRPS.01-PV			CHECKED: HPS				SCALE: NONE SHEET

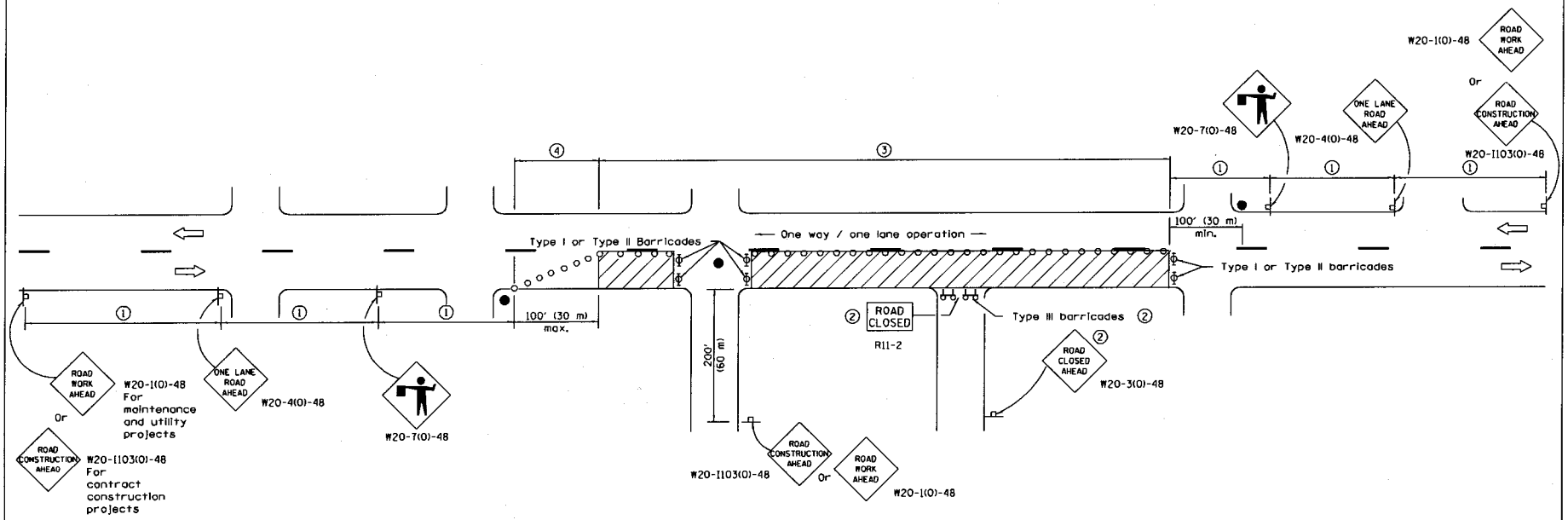

SIGN SPACING	
Posted Speed	Sign Spacing
55	500' (150 m)
50-45	350' (100 m)
<45	200' (60 m)

SYMBOLS

- Work area
- Cone, drum or barricade (not required for moving operations)
- Sign on portable or permanent support
- Flagger with traffic control sign
- Barricade or drum with flashing light
- Type III barricade with flashing lights

1. Refer to SIGN SPACING TABLE for distances.
2. For approved sideroad closures.
3. Cones at 25' (8 m) centers for 250' (75 m). Additional cones may be placed at 50' (15 m) centers. When drums or Type I or Type II barricades are used, the interval between devices may be doubled.
4. Cones, drums or barricades at 20' (6 m) centers.

GENERAL NOTES

This Standard is used where at any time, day or night, any vehicle, equipment, workers or their activities encroach on the pavement requiring the closure of one traffic lane in an urban area.

All dimensions are in inches (millimeters) unless otherwise shown.

URBAN LANE CLOSURE, 2L, 2W, UNDIVIDED

STANDARD 701501-06

VARIOUS LOCATIONS	COUNTY HIGHWAY: VARIOUS		COUNTY OF COOK DEPARTMENT OF TRANSPORTATION AND HIGHWAYS	COMPUTED: KLP DRAWN: KLP CHECKED: HPS	REVISIONS	DATE MM/DD/YR	PROJECT NAME - PROJECT LIMITS	PM-13
	FISCAL YEAR: 2015						STANDARDS	SCALE: NONE SHEET
	SECTION: 14-PPRPS_01-PV							

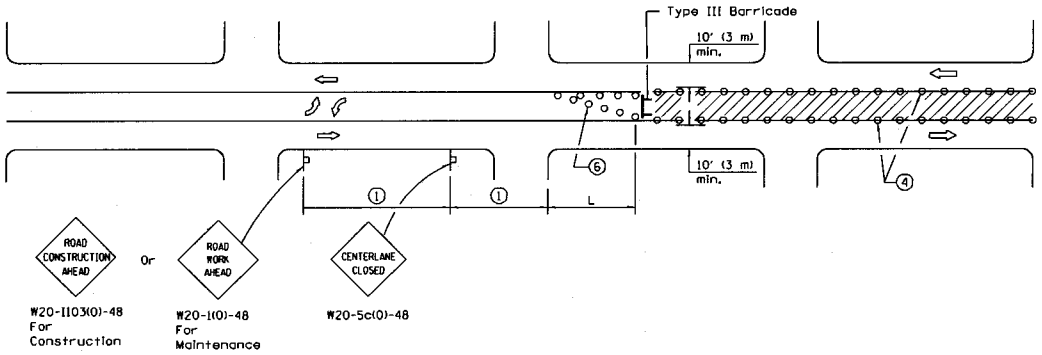

CASE I

(Signs required for both directions)

SIGN SPACING	
Posted Speed	Sign Spacing
55	500' (150 m)
50-45	350' (100 m)
<45	200' (60 m)

SYMBOLS

- Work area
- Barricade or drum with flashing light
- Flagger with traffic control sign
- Cone, drum or barricade (Cones for daytime use only)
- Sign on portable or permanent support

1. Refer to SIGN SPACING TABLE for distances.
2. Required for speeds > 40 mph (70 km/h).
3. Required if work exceeds 500' (164 m) or 1 block.
4. Cones at 25' (8 m) centers for 250' (75 m). Additional cones may be placed at 15 m (50') centers. When drums or type I or II barricades are used, the interval between devices may be doubled.
5. For approved sideroad closures.
6. Cones, drums or barricades at 20' (6 m) centers in taper.
7. Use flagger sign only when flagger is present.

GENERAL NOTES

This Standard is used to close one lane of an urban, two lane, two way roadway with a bidirectional turn lane.

Case I applies when no workers are present. When workers are present, two lanes shall be closed and traffic control shall be according to Standard 701501.

Calculate L as follows:

SPEED LIMIT	FORMULAS English	FORMULAS (Metric)
40 mph (70 km/h) or less:	$L=\frac{WS^2}{60}$	$L=\frac{WS^2}{150}$
45 mph (80 km/h) or greater:	L=(W)(S)	L=0.65(W)(S)

W = Width of offset in feet (meters).

S = Normal posted speed mph (km/h).

All dimensions are in inches (millimeters) unless otherwise shown.

URBAN LANE CLOSURE, 2L, 2W, WITH BIDIRECTIONAL LEFT TURN LANE

(Sheet 1 of 2)

STANDARD 701502-06

VARIOUS LOCATIONS	COUNTY HIGHWAY: VARIOUS	FISCAL YEAR: 2015	SECTION: 14-PPRPS-01-PV	COUNTY OF COOK DEPARTMENT OF TRANSPORTATION AND HIGHWAYS	COMPUTED: KLP DRAWN: KLP CHECKED: HPS	REVISIONS / DATE MM/DD/YR	PROJECT NAME – PROJECT LIMITS / STANDARDS	PM-14 SCALE: NONE SHEET

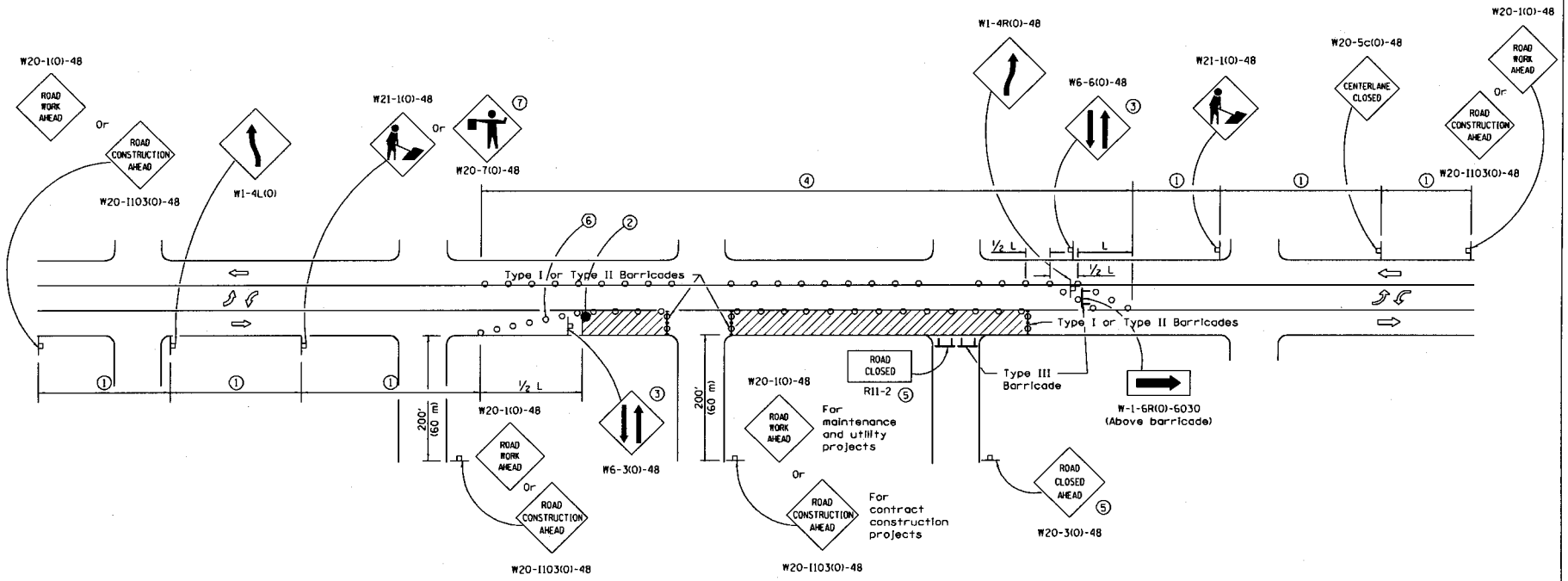

CASE II

URBAN LANE CLOSURE, 2L, 2W, WITH BIDIRECTIONAL LEFT TURN LANE

(Sheet 2 of 2)

STANDARD 701502-06

VARIOUS LOCATIONS	COUNTY HIGHWAY: VARIOUS FISCAL YEAR: 2015 SECTION: 14-PPRPS_01-PV	COUNTY OF COOK DEPARTMENT OF TRANSPORTATION AND HIGHWAYS	COMPUTED: KLP DRAWN: KLP CHECKED: HPS	REVISIONS	DATE MM/DD/YR	PROJECT NAME – PROJECT LIMITS STANDARDS	PM-15 SCALE: NONE SHEET

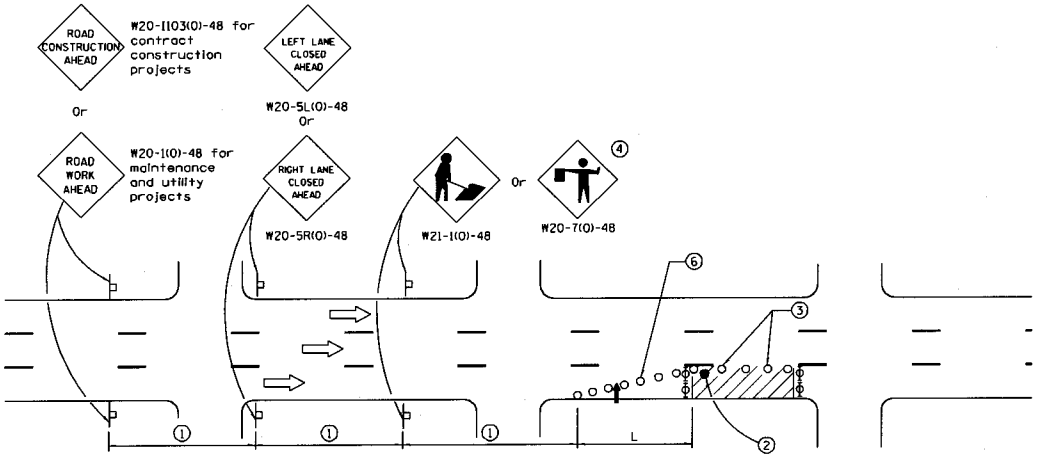

SIGN SPACING	
Posted Speed	Sign Spacing
55	500' (150 m)
50-45	350' (100 m)
<45	200' (60 m)

SYMBOLS

- Arrow board
- Cone, drum or barricade
- Sign on portable or permanent support
- Work area
- Barricade or drum with flashing light
- Type III barricade with flashing lights
- Flagger with traffic control sign.

1. Refer to SIGN SPACING TABLE for distances.
2. Required for speeds > 40 MPH
3. Cones at 25' (8 m) centers for 250' (75 m). Additional cones may be placed at 50' (15 m) centers. When drums or Type I or Type II barricades are used, the interval between devices may be doubled.
4. Use flagger sign only when flagger is present.
5. For approved sideroad closures.
6. Cones, drums or barricades at 20' (6 m) in taper.

GENERAL NOTES

This Standard is used where at any time, day or night, any vehicle, equipment, workers or their activities encroach on the pavement during shoulder operations or where construction requires lane closures in urban areas.

Calculate L as follows:

SPEED LIMIT	FORMULAS English	FORMULAS (Metric)
40 mph (70 km/h) or less:	$L=\frac{WS^2}{60}$	$L=\frac{WS^2}{150}$
45 mph (80 km/h) or greater:	L=(W)(S)	L=0.65(W)(S)

W = Width of offset in feet (meters).

S = Normal posted speed mph (km/h).

All dimensions are in inches (millimeters) unless otherwise shown.

URBAN LANE CLOSURE, MULTILANE, 1W OR 2W WITH NONTRAVERSABLE MEDIAN

(Sheet 1 of 2)

STANDARD 701601-09

VARIOUS LOCATIONS	COUNTY HIGHWAY: VARIOUS	FISCAL YEAR: 2015	SECTION: 14-PPRPS_01-PV	COUNTY OF COOK DEPARTMENT OF TRANSPORTATION AND HIGHWAYS	COMPUTED: KLP DRAWN: KLP CHECKED: HPS	REVISIONS / DATE MM/DD/YR	PROJECT NAME – PROJECT LIMITS / STANDARDS	PM-16 SCALE: NONE SHEET

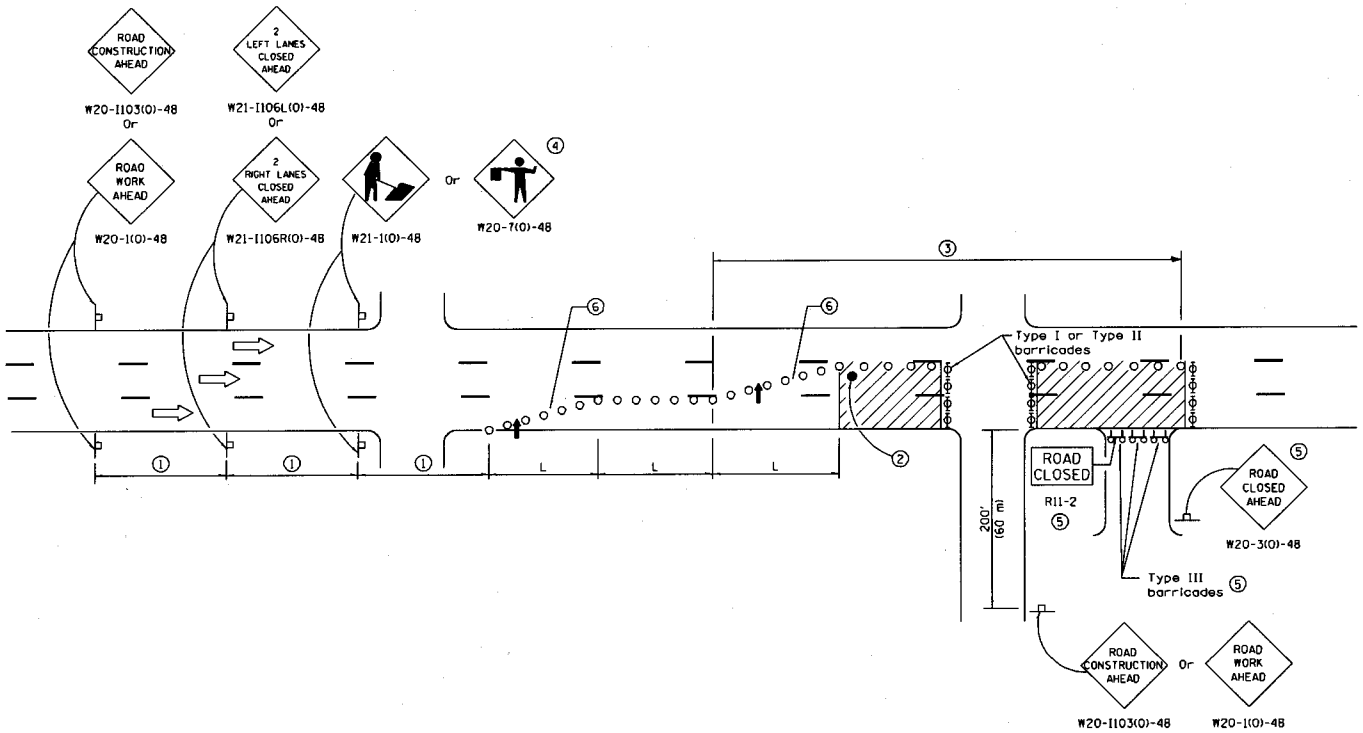

URBAN LANE CLOSURE, MULTILANE, 1W OR 2W WITH NONTRAVERSABLE MEDIAN

(Sheet 2 of 2)

STANDARD 701601-09

VARIOUS LOCATIONS	COUNTY HIGHWAY: VARIOUS	COUNTY OF COOK DEPARTMENT OF TRANSPORTATION AND HIGHWAYS	COMPUTED: KLP	REVISIONS	DATE	PROJECT NAME – PROJECT LIMITS	PM-17
	FISCAL YEAR: 2015		DRAWN: KLP		MM/DD/YR	STANDARDS	
	SECTION: 14-PPRPS_01-PV		CHECKED: HPS				SCALE: NONE SHEET

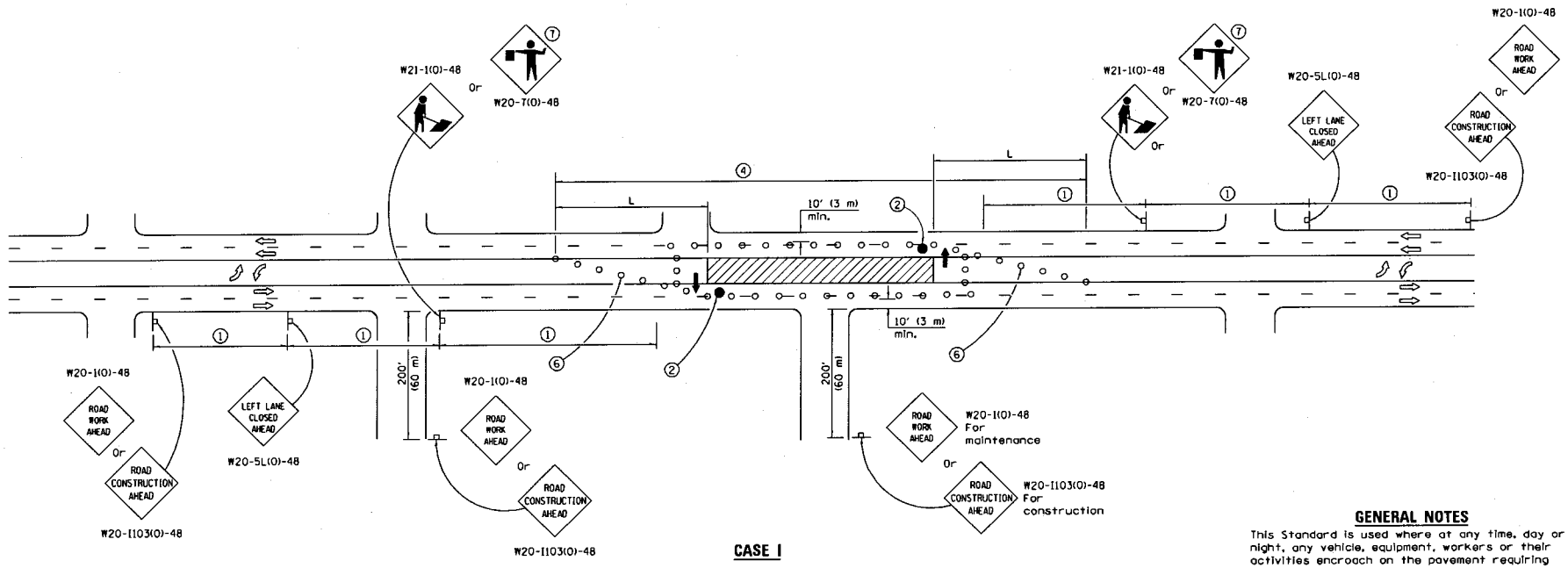

SIGN SPACING	
Posted Speed	Sign Spacing
55	500' (150 m)
50-45	350' (100 m)
<45	200' (60 m)

SYMBOLS

- Arrow board
- Work area
- Barricade or drum with steady burning mondirectional light
- Flagger with traffic control sign
- Cone, drum or barricade (Cones for daytime use only)
- Sign on portable or permanent support
- Type III Barricade

CASE I

1. Refer to SIGN SPACING TABLE for distances.
2. Required for speeds > 40 mph (70 km/h).
3. Required if work exceeds 500' (164 m) or 1 block, repeat every 1 mile (1.6 km).
4. Cones at 25' (8 m) centers for 250' (75 m). Additional cones may be placed at 50' (15 m) centers. When drums or type I or II barricades are used, the interval between devices may be doubled.
5. For approved sideroad closures.
6. Cones, drums or barricades at 20' (6 m) centers in taper.
7. Use flagger sign only when flagger is present.

GENERAL NOTES

This Standard is used where at any time, day or night, any vehicle, equipment, workers or their activities encroach on the pavement requiring the closure of one traffic lane in an Urban area.

If the work operation is performed between 9:00 a.m. and 3:00 p.m. and does not exceed 15 min. Traffic protection shall be as shown for Standard 701426.

Calculate L as follows:

SPEED LIMIT	FORMULAS English	FORMULAS (Metric)
40 mph (70 km/h) or less:	$L=\frac{WS^2}{60}$	$L=\frac{WS^2}{150}$
45 mph (80 km/h) or greater:	L=(W)(S)	L=0.65(W)(S)

W = Width of offset in feet (meters).

S = Normal posted speed mph (km/h).

All dimensions are in inches (millimeters) unless otherwise shown.

URBAN LANE CLOSURE, MULTILANE, 2W WITH BIDIRECTIONAL LEFT TURN LANE

(Sheet 1 of 4)

STANDARD 701602-07

VARIOUS LOCATIONS	COUNTY HIGHWAY: VARIOUS	FISCAL YEAR: 2015	SECTION: 14-PPRPS_01-PV

COUNTY OF COOK
DEPARTMENT OF TRANSPORTATION AND HIGHWAYS

COMPUTED: KLP
DRAWN: KLP
CHECKED: HPS

REVISIONS | DATE MM/DD/YR

PROJECT NAME - PROJECT LIMITS

STANDARDS

PM-18

SCALE: NONE SHEET

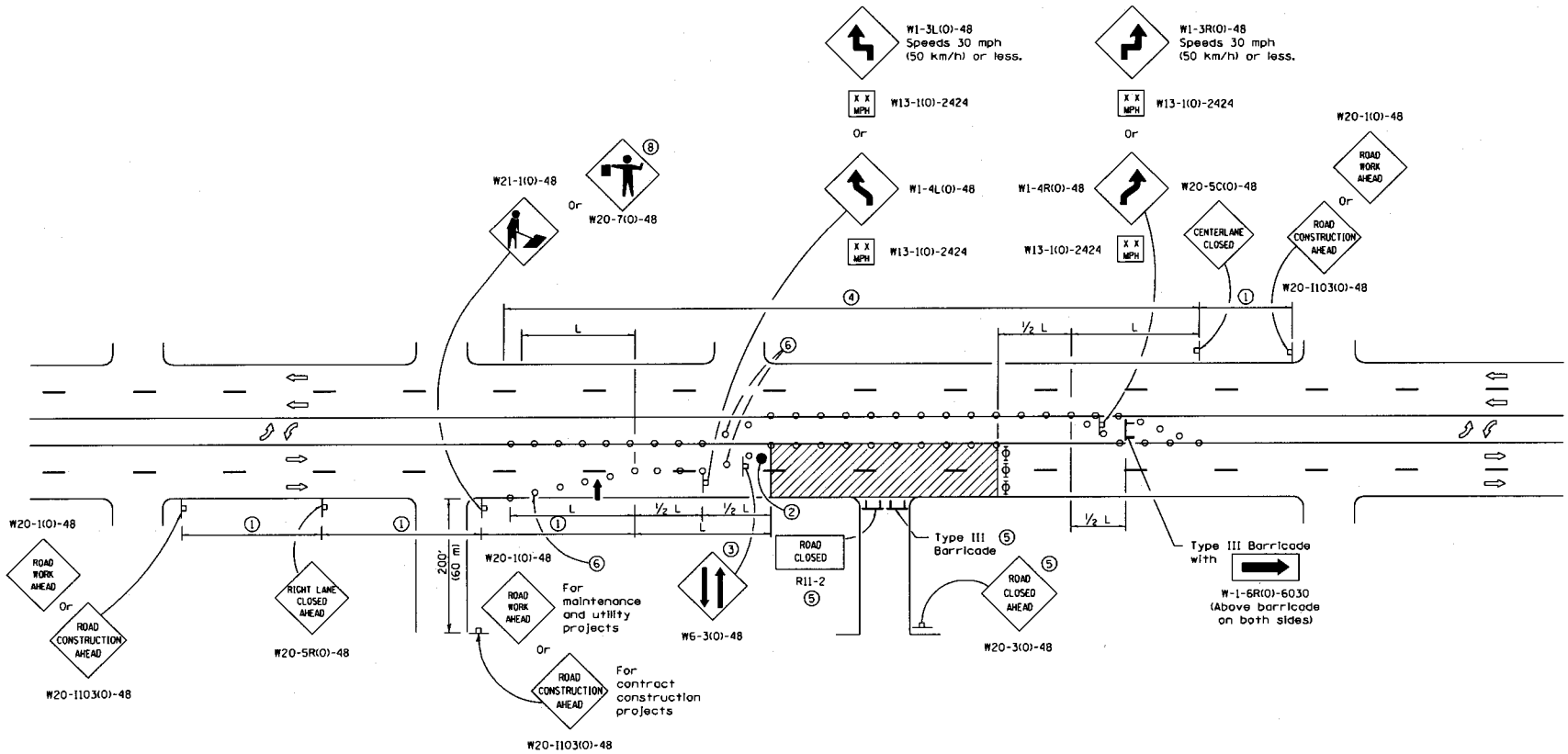

CASE II

URBAN LANE CLOSURE, MULTILANE, 2W WITH BIDIRECTIONAL LEFT TURN LANE

(Sheet 2 of 4)

STANDARD 701602-07

VARIOUS LOCATIONS	COUNTY HIGHWAY: VARIOUS	COUNTY OF COOK DEPARTMENT OF TRANSPORTATION AND HIGHWAYS	COMPUTED: KLP DRAWN: KLP CHECKED: HPS	REVISIONS	DATE MM/DD/YR	PROJECT NAME – PROJECT LIMITS	PM–19
	FISCAL YEAR: 2015					STANDARDS	
	SECTION: 14-PPRPS_01-PV						SCALE: NONE SHEET

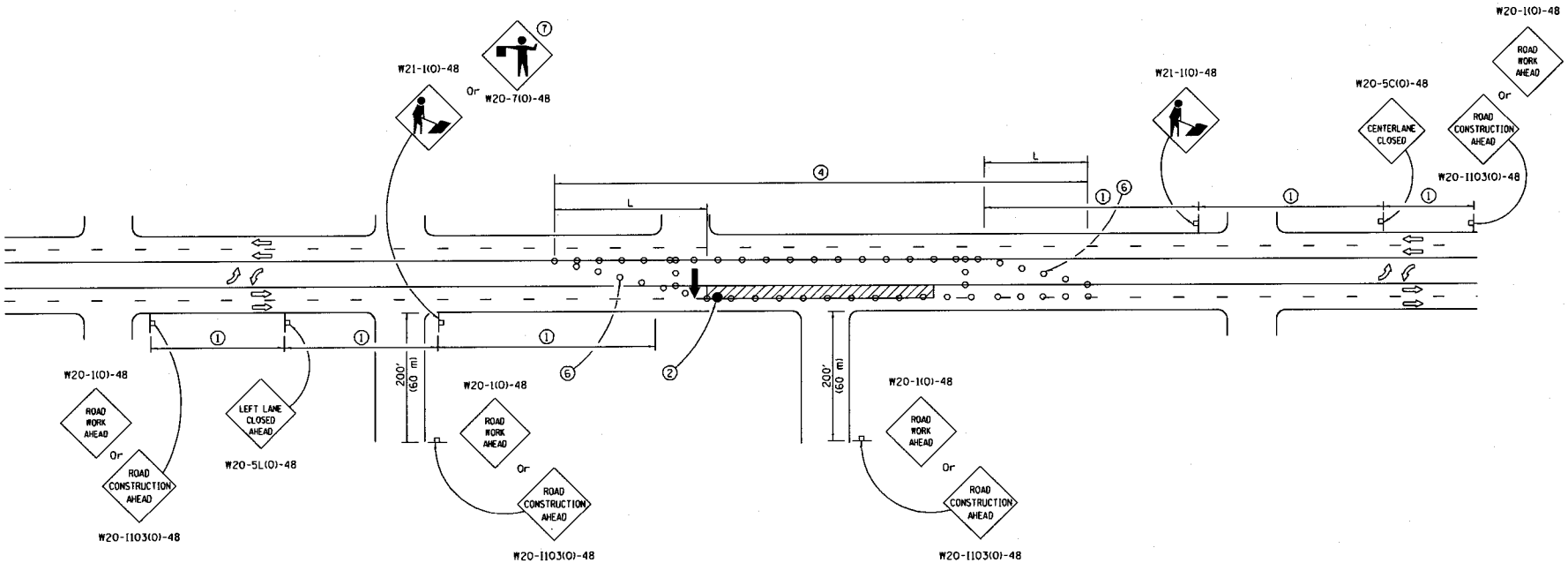

CASE III

URBAN LANE CLOSURE, MULTILANE, 2W WITH BIDIRECTIONAL LEFT TURN LANE

(Sheet 3 of 4)

STANDARD 701602-07

VARIOUS LOCATIONS	COUNTY HIGHWAY: VARIOUS	COUNTY OF COOK	COMPUTED: KLP	REVISIONS	DATE	PROJECT NAME - PROJECT LIMITS	PM-20
	FISCAL YEAR: 2015	DEPARTMENT OF TRANSPORTATION AND HIGHWAYS	DRAWN: KLP		MM/DD/YR	STANDARDS	
	SECTION: 14-PPRPS-01-PV		CHECKED: MPS				SCALE: NONE SHEET

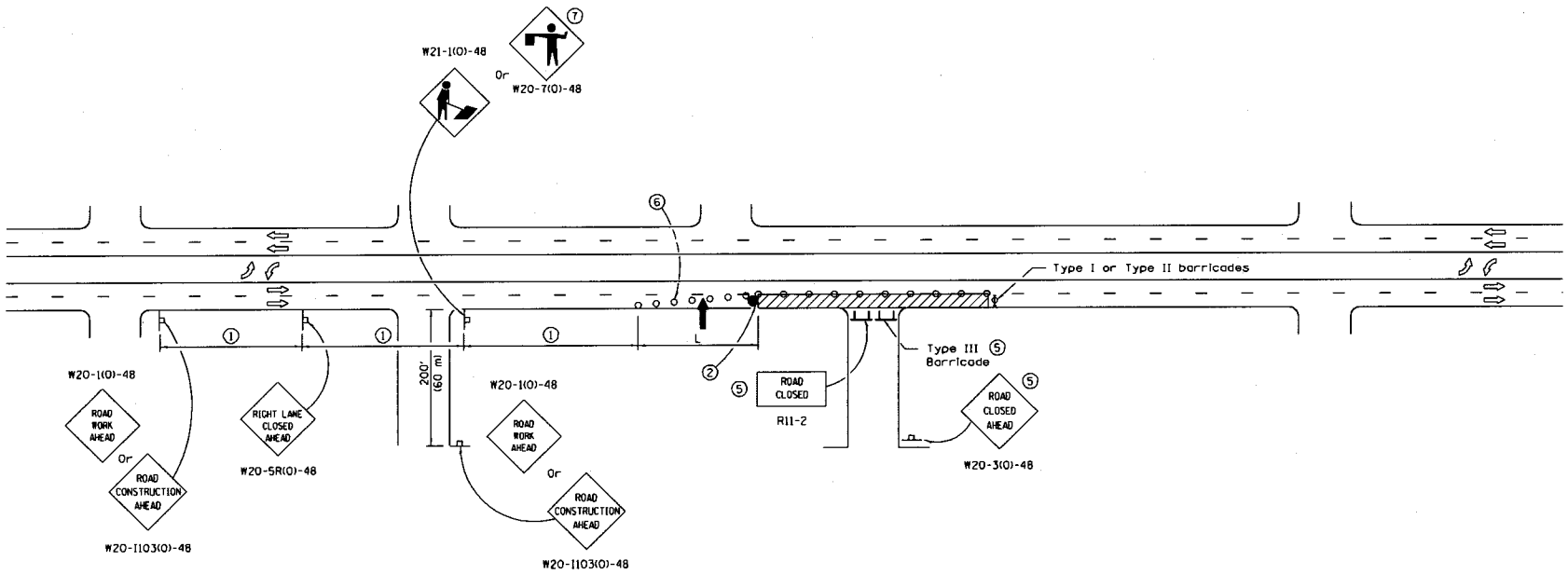

CASE IV

URBAN LANE CLOSURE, MULTILANE, 2W WITH BIDIRECTIONAL LEFT TURN LANE

(Sheet 4 of 4)

STANDARD 701602-07

VARIOUS LOCATIONS	COUNTY HIGHWAY: VARIOUS	COUNTY OF COOK DEPARTMENT OF TRANSPORTATION AND HIGHWAYS	COMPUTED: KLP DRAWN: KLP CHECKED: HPS	REVISIONS	DATE MM/DD/YR	PROJECT NAME – PROJECT LIMITS STANDARDS	PM-21
	FISCAL YEAR: 2015						SCALE: NONE SHEET
	SECTION: 14-PPRPS_01-PV						

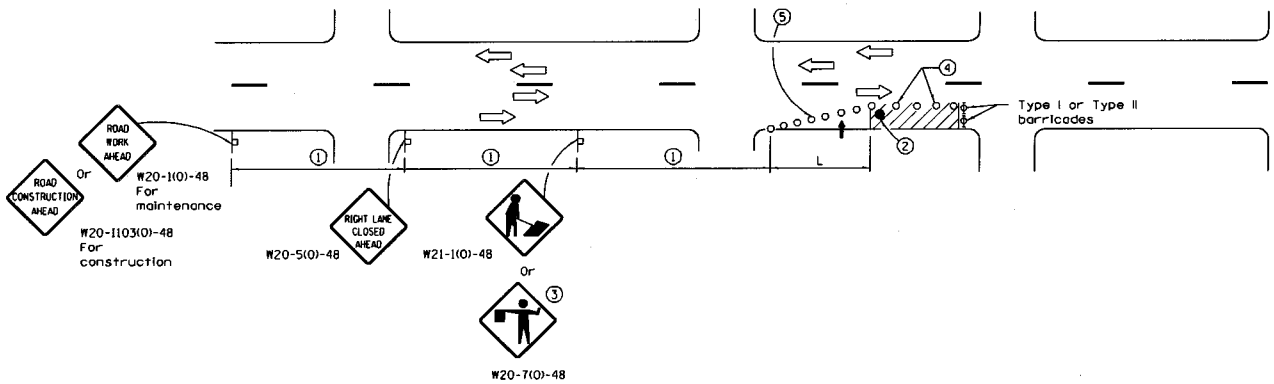

SIGN SPACING	
Posted Speed	Sign Spacing
55	500' (150 m)
50-45	350' (100 m)
<45	200' (60 m)

SYMBOLS

- Arrow board
- Cone, drum or barricade
- Sign on portable or permanent support
- Work area
- Barricade or drum with flashing light
- Flagger with traffic control sign.

1. Refer to SIGN SPACING TABLE for distances.
2. Required for speeds > 40 mph.
3. Use flagger sign only when flagger is present.
4. Cones at 25' (8 m) centers for 250' (75 m). Additional cones may be placed at 50' (15 m) centers. When drums or Type I or Type II barricades are used, the interval between devices may be doubled.
5. Cones, drums or barricades at 20' (6 m) centers in taper.

GENERAL NOTES

This Standard is used where at any time, day or night, any vehicle, equipment, workers or their activities encroach on the pavement requiring the closure of one traffic lane in an Urban area.

Calculate L as follows:

SPEED LIMIT	FORMULAS English	FORMULAS (Metric)
40 mph (70 km/h) or less:	$L=\frac{WS^2}{60}$	$L=\frac{WS^2}{150}$
45 mph (80 km/h) or greater:	L=(W)(S)	L=0.65(W)(S)

W = Width of offset in feet (meters).

S = Normal posted speed mph (km/h).

All dimensions are in inches (millimeters) unless otherwise shown.

URBAN SINGLE LANE CLOSURE, MULTILANE, 2W WITH MOUNTABLE MEDIAN

STANDARD 701606-10

VARIOUS LOCATIONS	COUNTY HIGHWAY: VARIOUS	FISCAL YEAR: 2015	SECTION: 14-PPRPS_01-PV	COUNTY OF COOK DEPARTMENT OF TRANSPORTATION AND HIGHWAYS	COMPUTED: KLP DRAWN: KLP CHECKED: HPS	REVISIONS / DATE MM/DD/YR	PROJECT NAME – PROJECT LIMITS / STANDARDS	PM-22 SCALE: NONE SHEET

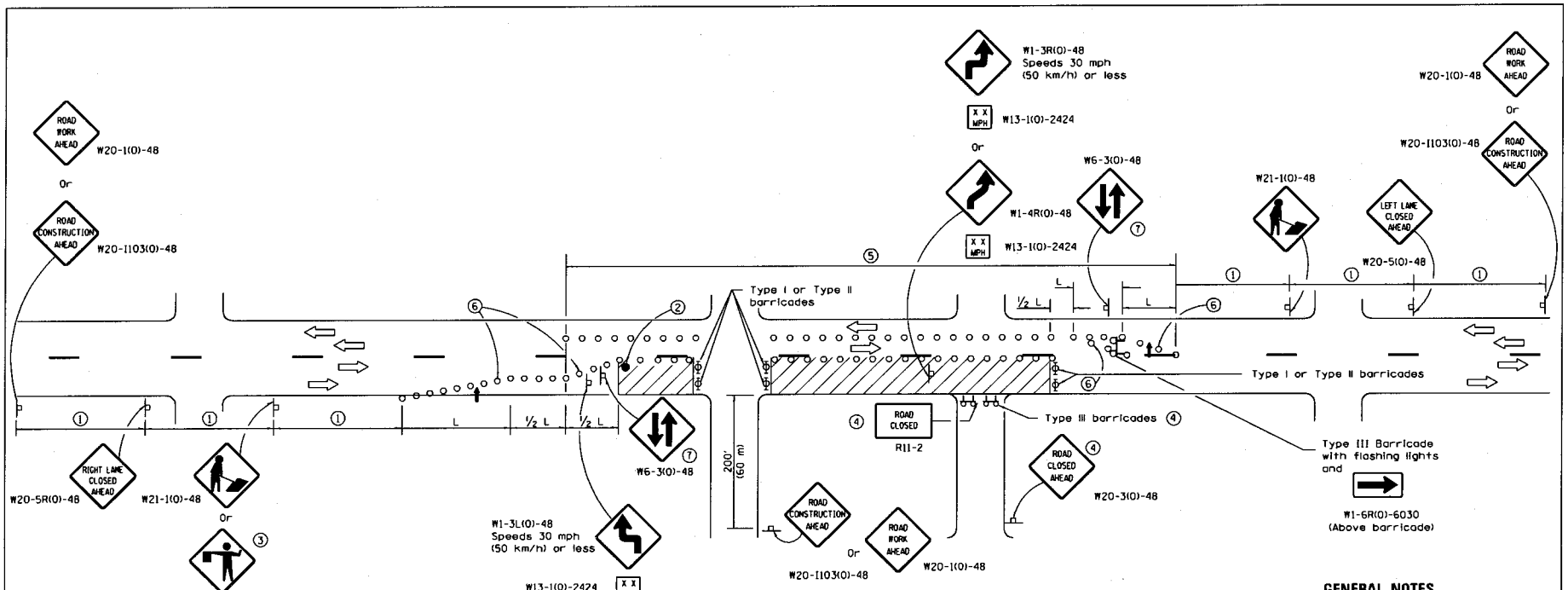

SIGN SPACING	
Posted Speed	Sign Spacing
55	500' (150 m)
50-45	350' (100 m)
<45	200' (60 m)

SYMBOLS

- Arrow board
- Cone, drum or barricade
- Sign on portable or permanent support
- Work area
- Barricade or drum with flashing light
- Type III barricade with flashing lights
- Flagger with traffic control sign.

1. Refer to SIGN SPACING TABLE for distances.
2. Required for speeds > 40 mph.
3. Use flagger sign only when flagger is present.
4. For approved sideroad closures.
5. Cones at 25' (8 m) centers for 250' (75 m). Additional cones may be placed at 50' (15 m) centers. When drums or Type I or Type II barricades are used, the interval between devices may be doubled.
6. Cones, drums or barricades at 20' (6 m) centers in taper.
7. Repeat every 1 mile (1.6 km).

GENERAL NOTES

This Standard is used where at any time, day or night, any vehicle, equipment, workers or their activities encroach on the pavement requiring the closure of more than one traffic lane in an urban area.

Calculate L as follows:

SPEED LIMIT	FORMULAS English	FORMULAS (Metric)
40 mph (70 km/h) or less:	$L=\frac{WS^2}{60}$	$L=\frac{WS^2}{150}$
45 mph (80 km/h) or greater:	L=(W)(S)	L=0.65(W)(S)

W = Width of offset in feet (meters).

S = Normal posted speed mph (km/h).

All dimensions are in inches (millimeters) unless otherwise shown.

URBAN HALF ROAD CLOSURE, MULTILANE, 2W WITH MOUNTABLE MEDIAN

STANDARD 701611

VARIOUS LOCATIONS	COUNTY HIGHWAY: VARIOUS	FISCAL YEAR: 2015	SECTION: 14-PPRPS_01-PV	COUNTY OF COOK DEPARTMENT OF TRANSPORTATION AND HIGHWAYS	COMPUTED: KLP DRAWN: KLP CHECKED: HPS	REVISIONS / DATE MM/DD/YR	PROJECT NAME – PROJECT LIMITS / STANDARDS	PM-23 SCALE: NONE SHEET

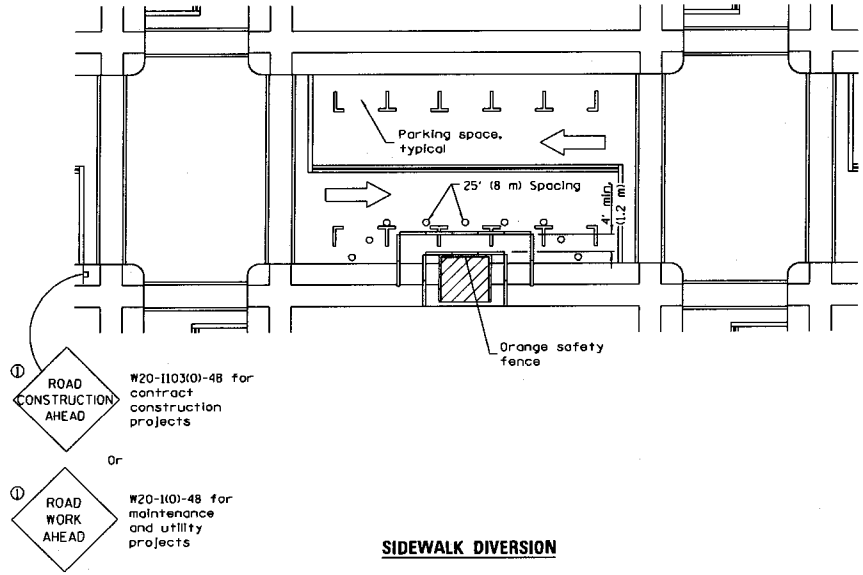

SIDEWALK DIVERSION

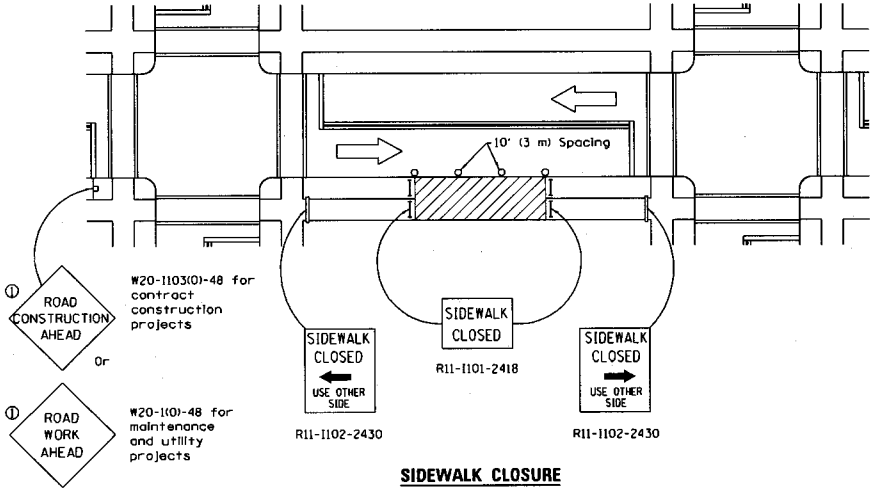

SIDEWALK CLOSURE

① Omit whenever duplicated by road work traffic control.

SYMBOLS

- Work area
- Sign on portable or permanent support
- Barricade or drum
- Cone, drum or barricade
- Type III barricade
- Detectable pedestrian chanellizing barricade

GENERAL NOTES

This Standard is used where, at any time, pedestrian traffic must be rerouted due to work being performed.

This Standard must be used in conjunction with other Traffic Control & Protection Standards when roadway traffic is affected.

Temporary facilities shall be detectable and accessible.

The temporary pedestrian facilities shall be provided on the same side of the closed facilities whenever possible.

The SIDEWALK CLOSED / USE OTHER SIDE sign shall be placed at the nearest crosswalk or intersection to each end of the closure. Where the closure occurs at a corner, the signs shall be erected on the corners across the street from the closure. The SIDEWALK CLOSED signs shall be used at the ends of the actual closures.

Type III barricades and R11-2-4830 signs shall be positioned as shown in "ROAD CLOSED TO ALL TRAFFIC" detail on Standard 701901.

All dimensions are in inches (millimeters) unless otherwise shown.

SIDEWALK, CORNER OR CROSSWALK CLOSURE

(Sheet 1 of 2)

STANDARD 701801-05

VARIOUS LOCATIONS	COUNTY HIGHWAY: VARIOUS	COUNTY OF COOK DEPARTMENT OF TRANSPORTATION AND HIGHWAYS	COMPUTED: KLP	REVISIONS	DATE	PROJECT NAME - PROJECT LIMITS	PM-24
	FISCAL YEAR: 2015		DRAWN: KLP		MM/DD/YR	STANDARDS	
	SECTION: 14-PPRPS.01-PV		CHECKED: HPS				SCALE: NONE SHEET

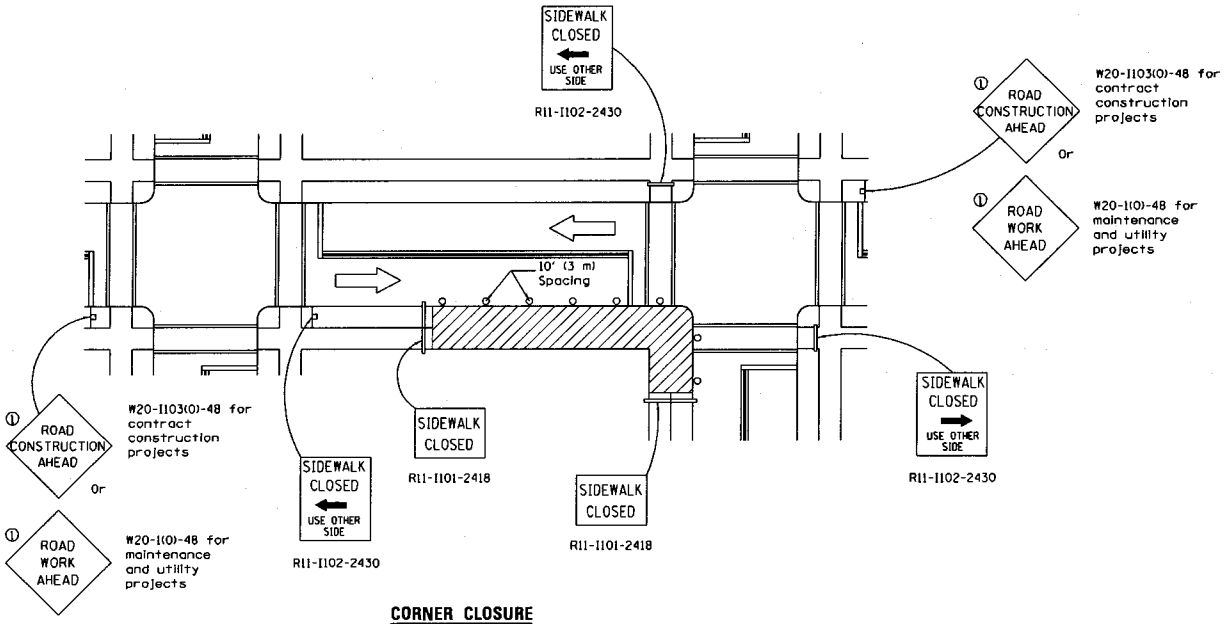

CORNER CLOSURE

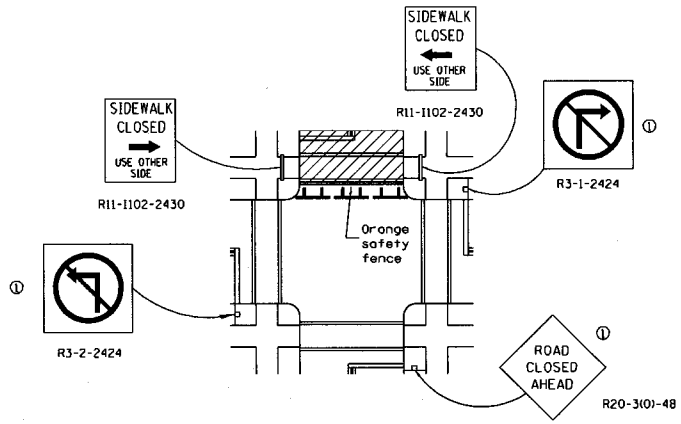

CROSSWALK CLOSURE

SIDEWALK, CORNER OR CROSSWALK CLOSURE

(Sheet 2 of 2)

STANDARD 701801-05

VARIOUS LOCATIONS	COUNTY HIGHWAY: VARIOUS FISCAL YEAR: 2015 SECTION: 14-PPRPS_D1-PV	COUNTY OF COOK DEPARTMENT OF TRANSPORTATION AND HIGHWAYS	COMPUTED: KLP DRAWN: KLP CHECKED: HPS	REVISIONS	DATE MM/DD/YR	PROJECT NAME – PROJECT LIMITS STANDARDS	PM-25 SCALE: NONE SHEET

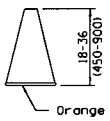

CONE

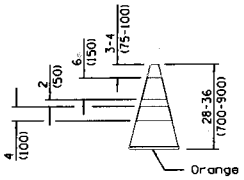

REFLECTORIZED CONE

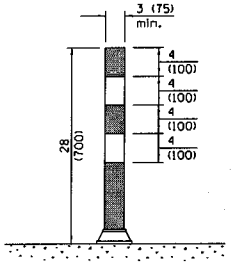

FLEXIBLE DELINEATOR

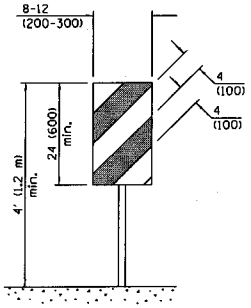

VERTICAL PANEL
POST MOUNTED

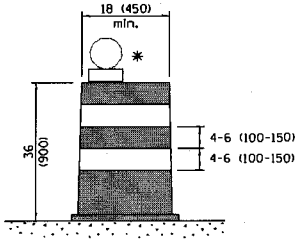

DRUM

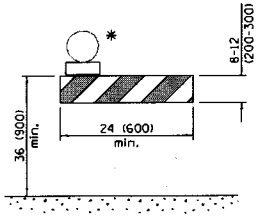

TYPE I BARRICADE

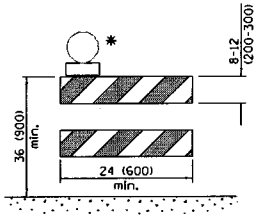

TYPE II BARRICADE

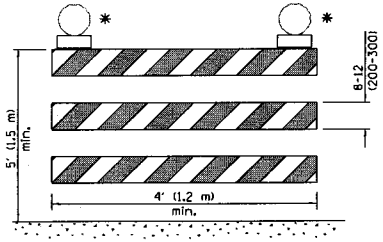

TYPE III BARRICADE

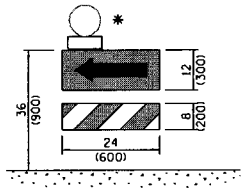

DIRECTION INDICATOR BARRICADE

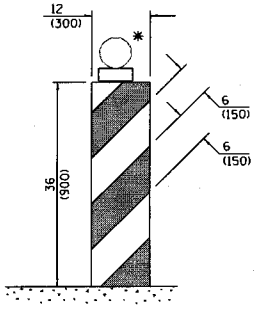

VERTICAL BARRICADE

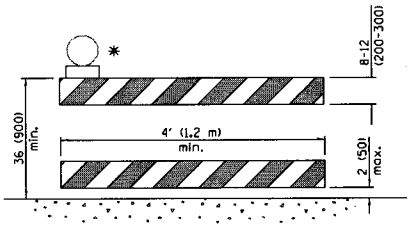

DETECTABLE PEDESTRIAN CHANNELIZING BARRICADE

✱ Warning lights (if required)

GENERAL NOTES

All heights shown shall be measured above the pavement surface.

All dimensions are in inches (millimeters) unless otherwise shown.

TRAFFIC CONTROL DEVICES

(Sheet 1 of 3)

STANDARD 701901-04

VARIOUS LOCATIONS	COUNTY HIGHWAY: VARIOUS	COUNTY OF COOK DEPARTMENT OF TRANSPORTATION AND HIGHWAYS	COMPUTED: KLP	REVISIONS	DATE	PROJECT NAME – PROJECT LIMITS	PM-26
	FISCAL YEAR: 2015		DRAWN: KLP		MM/DD/YR	STANDARDS	
	SECTION: 14-PPRPS_01-PV		CHECKED: HPS				SCALE: NONE SHEET

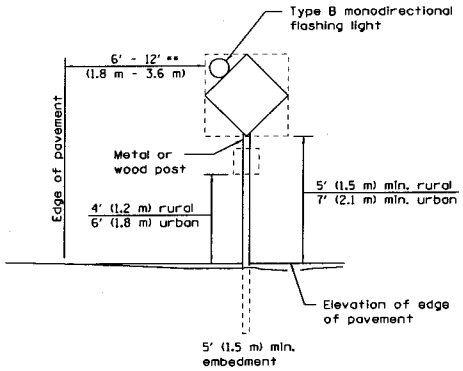

POST MOUNTED SIGNS

** When curb or paved shoulder are present this dimension shall be 24 (600) to the face of curb or 6' (1.8 m) to the outside edge of the paved shoulder.

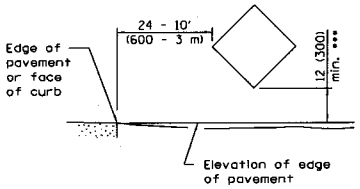

SIGNS ON TEMPORARY SUPPORTS

*** When work operations exceed four days, this dimension shall be 5' (1.5 m) min. If located behind other devices, the height shall be sufficient to be seen completely above the devices.

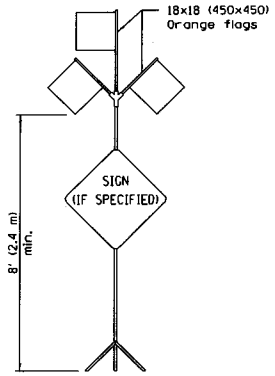

HIGH LEVEL WARNING DEVICE

ROAD CONSTRUCTION NEXT X MILES	END CONSTRUCTION
G20-I104(0)-6036	G20-I105(0)-6024

This signing is required for all projects 2 miles (3200 m) or more in length.

ROAD CONSTRUCTION NEXT X MILES sign shall be placed 500' (150 m) in advance of project limits.

END CONSTRUCTION sign shall be erected at the end of the job unless another job is within 2 miles (3200 m).

Dual sign displays shall be utilized on multi-lane highways.

WORK LIMIT SIGNING

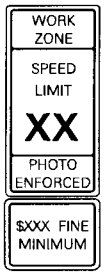

W21-I115(0)-3618

R2-1-3648

R10-I108p-3618 ****

R2-I106p-3618

Sign assembly as shown on Standards or as allowed by District Operations.

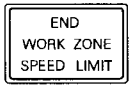

G20-I103(0)-6036

This sign shall be used when the above sign assembly is used.

HIGHWAY CONSTRUCTION SPEED ZONE SIGNS

**** R10-I108p shall only be used along roadways under the jurisdiction of the State.

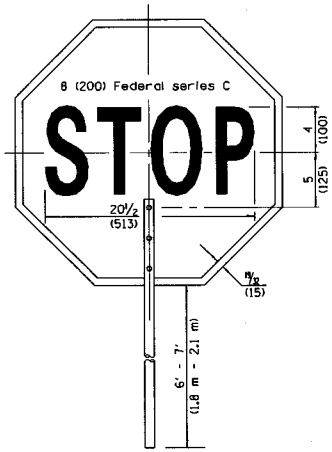

FRONT SIDE

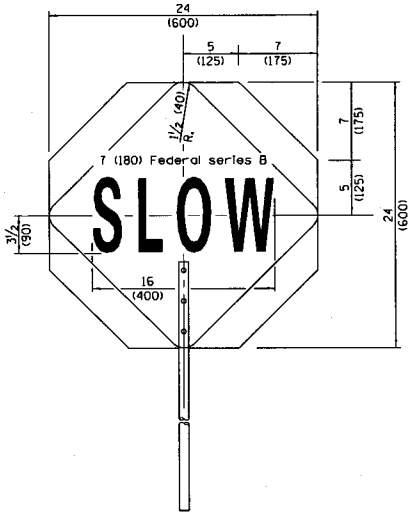

REVERSE SIDE

FLAGGER TRAFFIC CONTROL SIGN

TRAFFIC CONTROL DEVICES

(Sheet 2 of 3)

STANDARD 701901-04

VARIOUS LOCATIONS	COUNTY HIGHWAY: VARIOUS FISCAL YEAR: 2015 SECTION: 14-PPRPS..01-PV	COUNTY OF COOK DEPARTMENT OF TRANSPORTATION AND HIGHWAYS	COMPUTED: KLP DRAWN: KLP CHECKED: HPS	REVISIONS	DATE MM/DD/YR	PROJECT NAME - PROJECT LIMITS STANDARDS	PM-27 SCALE: NONE SHEET

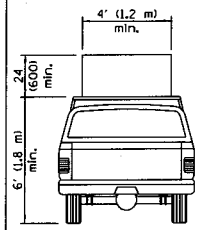

TYPE A ROOF MOUNTED

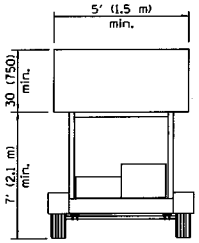

TYPE B ROOF OR TRAILER MOUNTED

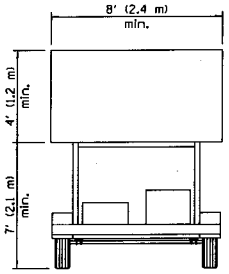

TYPE C TRAILER MOUNTED

ARROW BOARDS

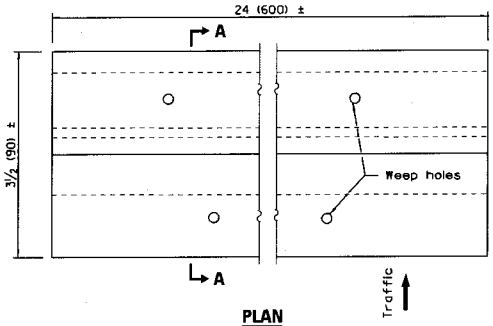

PLAN

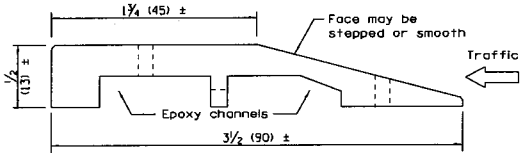

SECTION A–A

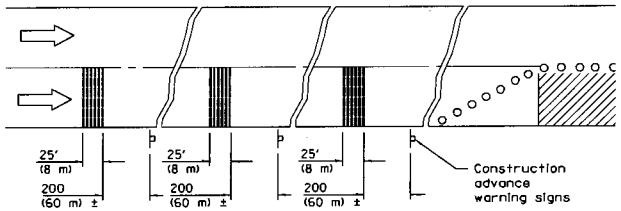

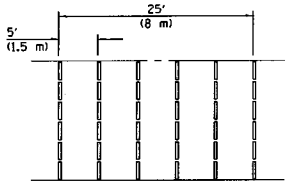

TYPICAL INSTALLATION

TEMPORARY RUMBLE STRIPS

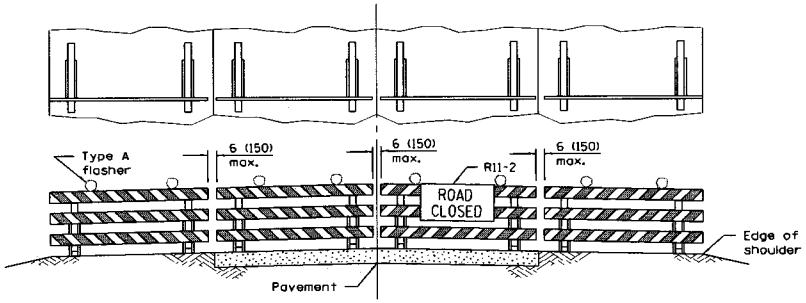

ROAD CLOSED TO ALL TRAFFIC

Reflectorized striping may be omitted on the back side of the barricades. If a Type III barricade with an attached sign panel which meets NCHRP 350 is not available, the sign may be mounted on an NCHRP 350 temporary sign support directly in front of the barricade.

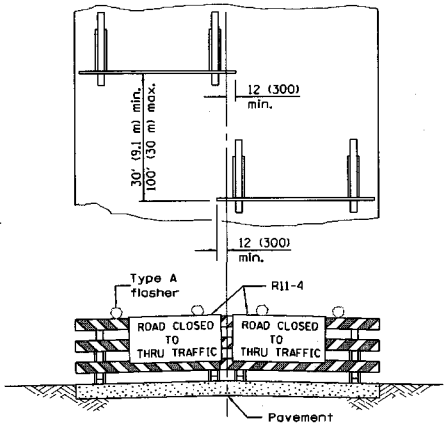

ROAD CLOSED TO THRU TRAFFIC

Reflectorized striping shall appear on both sides of the barricades. If a Type III barricade with an attached sign panel which meets NCHRP 350 is not available, the signs may be mounted on NCHRP 350 temporary sign supports directly in front of the barricade.

TYPICAL APPLICATIONS OF TYPE III BARRICADES CLOSING A ROAD

TRAFFIC CONTROL DEVICES

(Sheet 3 of 3)

STANDARD 701901–04

VARIOUS LOCATIONS	COUNTY HIGHWAY: VARIOUS	COUNTY OF COOK DEPARTMENT OF TRANSPORTATION AND HIGHWAYS	COMPUTED: KLP	REVISIONS	DATE MM/DD/YR	PROJECT NAME – PROJECT LIMITS	PM–28	
	FISCAL YEAR: 2015		DRAWN: KLP			STANDARDS		
	SECTION: 14-PPRPS_01-PV		CHECKED: HPS				SCALE: NONE	SHEET

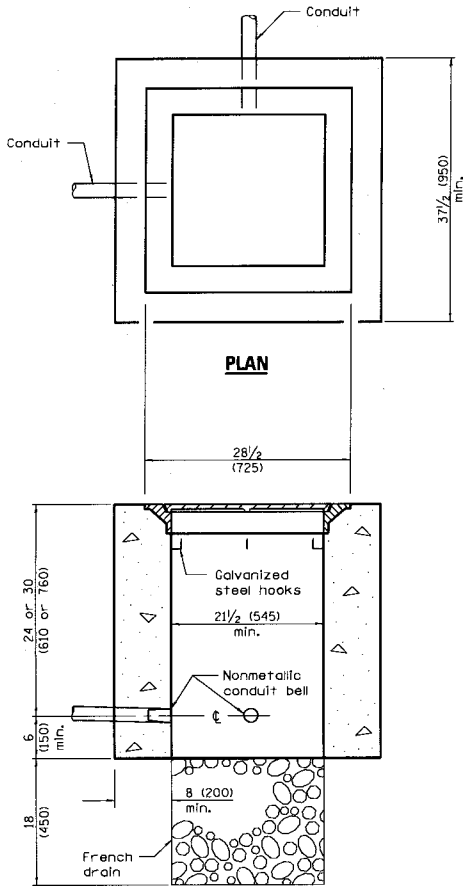

ELEVATION

PORTLAND CEMENT CONCRETE

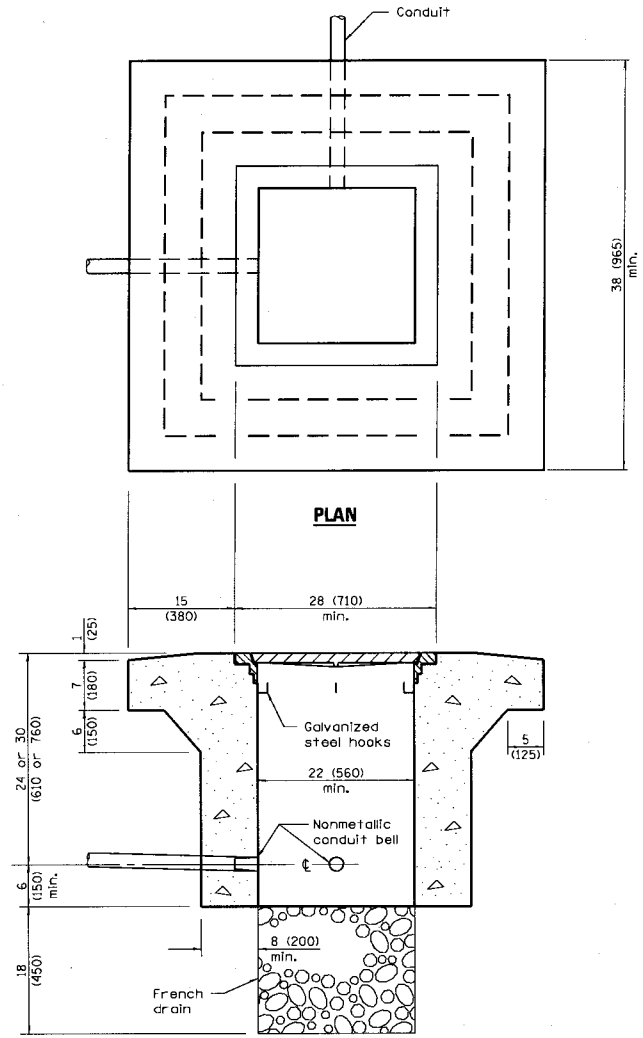

ELEVATION

PORTLAND CEMENT CONCRETE
HEAVY DUTY

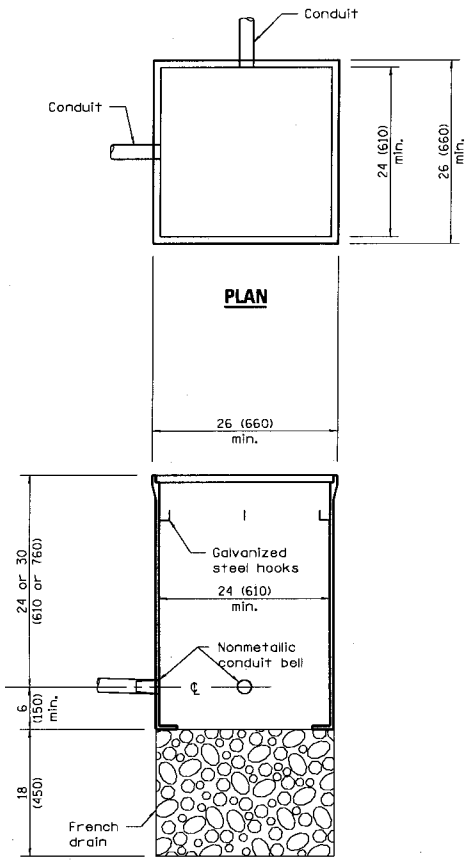

ELEVATION

COMPOSITE CONCRETE

All dimensions are in inches (millimeters) unless otherwise shown.

Illinois Department of Transportation

APPROVED January 1, 2009
ENGINEER OF OPERATIONS
APPROVED January 1, 2009
ENGINEER OF DESIGN AND ENVIRONMENT

ISSUED 1-1-97

DATE	REVISIONS
1-1-09	Switched units to
	English (metric).
1-1-07	Revised composite conc.
	handhole. Rem. weights
	of frames and covers.

HANDHOLES

STANDARD 814001-02

321

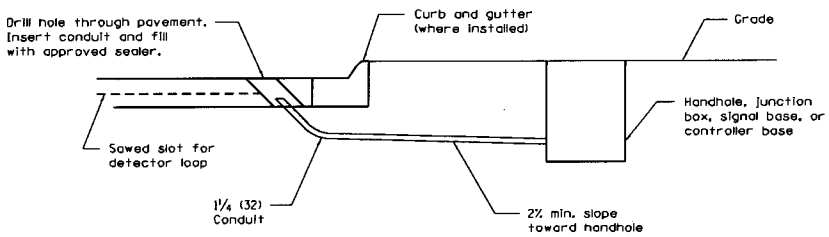

DETECTOR LOOP LEAD-IN

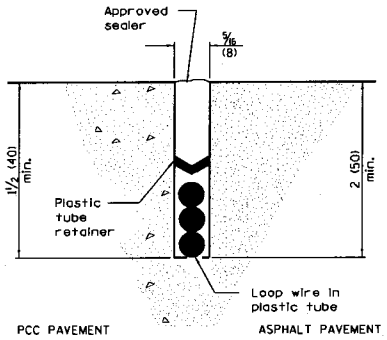

DETECTOR LOOP INSTALLATION

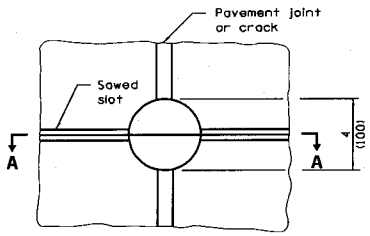

PLAN

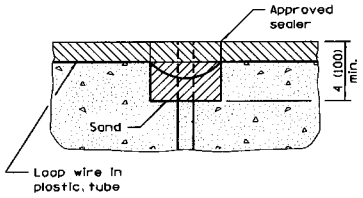

SECTION A-A

NOTE
Loop wire shall follow saw cut to bottom, forming slack section at joint.

DETECTOR LOOP AT PAVEMENT JOINT OR PAVEMENT CRACK

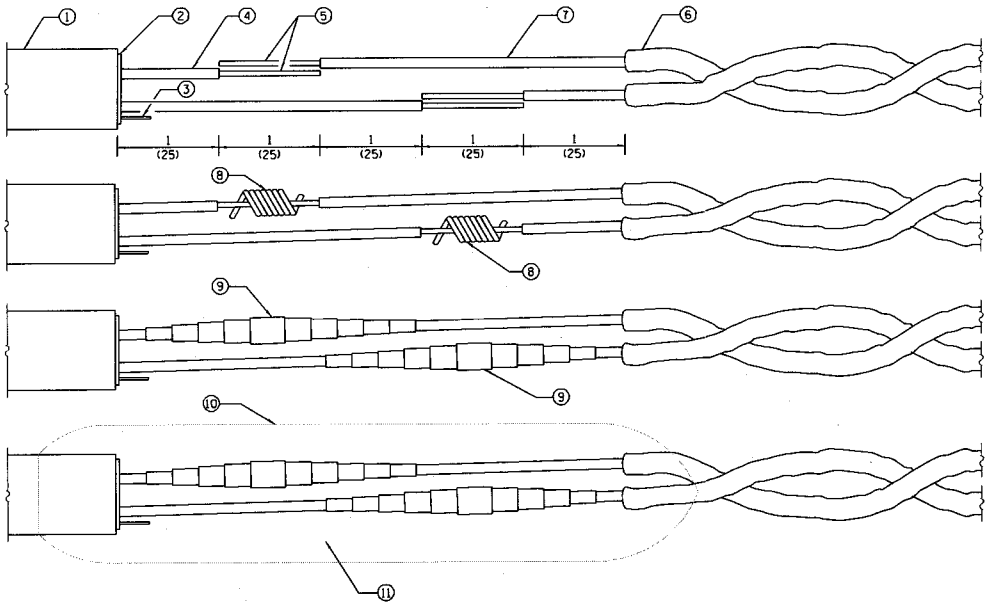

LOOP WIRE AND LEAD-IN CABLE SPLICE

1. = Lead-in cable (single pair or multipair)
2. = Lead-in cable shield
3. = Lead-in cable shield drain-wire
4. = Lead-in cable insulated conductor
5. = Bare conductor
6. = Loop wire in tube
7. = Loop wire insulated conductor
8. = Twisted and resin soldered conductor
9. = Electrical tape insulated splice
10. = Rigid mold
11. = Waterproof and dielectric resin

All dimensions are in inches (millimeters) unless otherwise shown.

DETECTOR LOOP INSTALLATIONS

STANDARD 886001-01

VARIOUS LOCATIONS	COUNTY HIGHWAY: VARIOUS FISCAL YEAR: 2015 SECTION: 14-PPRPS-01-PV	COUNTY OF COOK DEPARTMENT OF TRANSPORTATION AND HIGHWAYS	COMPUTED: PLM DRAWN: PP CHECKED: RJJ	REVISIONS	DATE MM/DD/YR	PROJECT NAME - PROJECT LIMITS STANDARDS	TS-1 SCALE: NONE SHEET

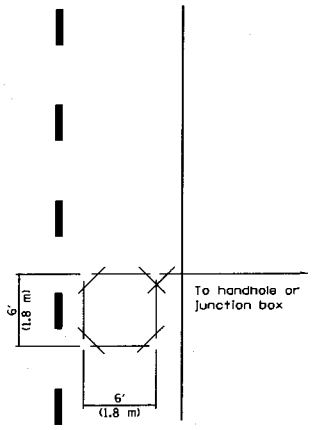

FOR POINT DETECTION
SHORT LOOP

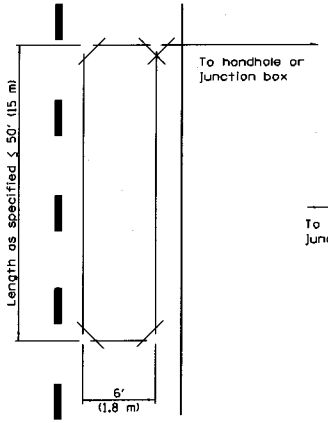

FOR PRESENCE DETECTION
LONG LOOP

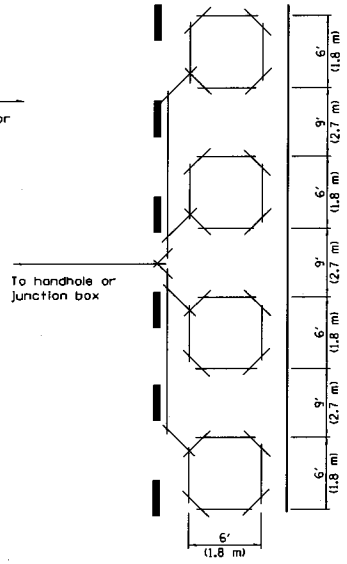

FOR PRESENCE DETECTION
MULTIPLE LOOP IN SERIES

SLOT PLAN

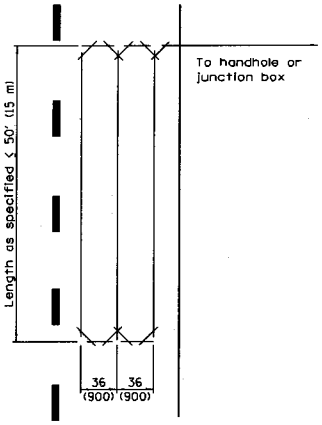

FOR PRESENCE DETECTION
QUADRUPOLE LOOP

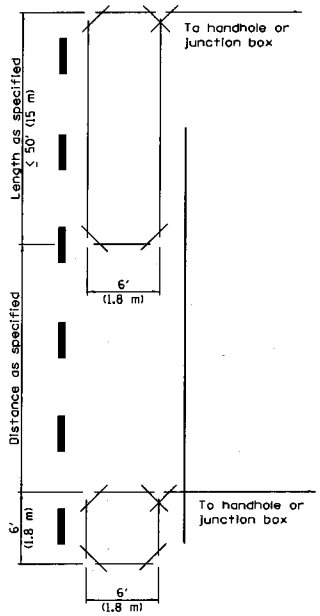

FOR EXTENDED-CALL DETECTION

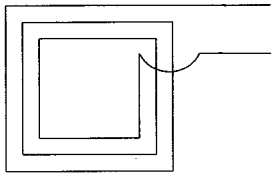

SHORT LOOP

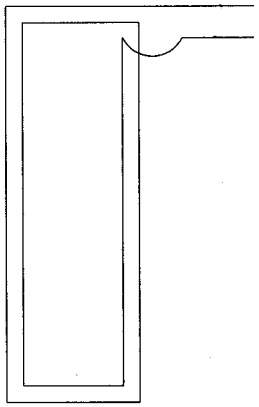

LONG LOOP

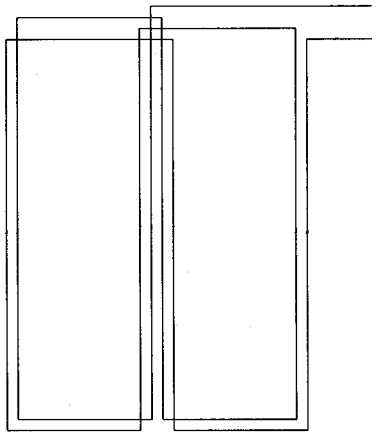

QUADRUPOLE LOOP

WIRING DIAGRAM

All dimensions are in inches (millimeters) unless otherwise shown.

TYPICAL LAYOUTS FOR DETECTION LOOPS

STANDARD 886006-01

VARIOUS LOCATIONS	COUNTY HIGHWAY: VARIOUS	COUNTY OF COOK DEPARTMENT OF TRANSPORTATION AND HIGHWAYS	COMPUTED: PLW DRAWN: PP CHECKED: RJJ	REVISIONS	DATE MM/DD/YR	PROJECT NAME - PROJECT LIMITS STANDARDS	TS-2
	FISCAL YEAR: 2015						SCALE: NONE SHEET 1
	SECTION: 14-PPRPS-01-PV						

LOOP DETECTOR NOTES

1. EACH PAIR OF LOOP WIRES SHALL BE PLACED IN A SEPARATE EMPTY COILABLE NONMETALLIC CONDUIT FROM THE EDGE OF PAVEMENT TO THE HANDHOLE. SPACING BETWEEN THE HOLES DRILLED IN THE PAVEMENT SHALL NOT BE LESS THAN 6" (150 mm). EMPTY COILABLE NONMETALLIC CONDUIT SHALL BE INCLUDED IN THE COST OF THE LOOP WIRE.

2. THE NUMBER OF LOOP TURNS SHALL BE AS RECOMMENDED BY THE AMPLIFIER MANUFACTURER. ALL ADJACENT SIDES OF THE LOOPS SHALL BE INSTALLED IN SUCH A WAY THAT THE CURRENT FLOW IS IN THE SAME DIRECTION TO REINFORCE ITS MAGNETIC FIELDS FOR SMALL VEHICLE DETECTION.

3. EACH LOOP LEAD-IN SHALL BE IDENTIFIED AND PERMANENTLY TAGGED IN THE HANDHOLE. EACH LEAD-IN CABLE TAG SHALL INDICATE THE LOCATION OF THE LOOP, LOOP ROTATION (CLOCKWISE/COUNTERCLOCKWISE), LOOP LEAD-IN DIRECTION (IN OR OUT), LOOP CABLE NUMBER AND LOCATION IN CABINET, AND NUMBER OF TURNS IN THE DETECTOR LOOPS IN WATER PROOF INK AS INDICATED ON THE DISTRICT 1 STANDARD TRAFFIC SIGNAL DESIGN DETAIL. THE CONTRACTOR SHALL MARK LOOP LOCATIONS ON RECORD DRAWINGS AND PRESENT TO THE ENGINEER AFTER FINAL INSPECTION. LOOPS SHALL BE MARKED BY LANE AND LOOP NUMBER. SEE DETAIL BELOW.

4. ALL LOOP CABLE SHALL BE FASTENED WITH PLASTIC TIE WRAP TO THE HANDHOLE HOOKS.

5. IN ASPHALT PAVEMENT, LOOPS SHOULD BE PLACED IN THE BINDER AND DIVEHOLES MARKED AT THE CURB WITH A SAW-CUT. THE SAW-CUT SHALL BE CUT IN ACCORDANCE WITH LOCAL AND E.P.A. DUST CONTROL REQUIREMENTS. DETECTOR LOOP(S) SHALL NOT BE INSTALLED IN WET CONDITIONS AND THE SAW-CUTS MUST BE FREE OF DEBRIS AND RESIDUE SUCH AS DUST AND WATER WHICH IS TO BE ACHIEVED BY THE USE OF COMPRESSED AIR, WIRE BRUSHING AND HEAT DRYING ACCORDING TO SEALANT MANUFACTURER REQUIREMENTS. THE DETECTOR WIRE SHALL BE HELD IN PLACE BY THE USE OF FORM WEDGES. WEDGES SHALL BE SPACED NO MORE THAN 18" (450 mm) APART.

6. LOOP SPLICES SHALL BE SOLDERED USING A SOLDERING IRON. BLOW TORCHES OR OTHER DEVICES WHICH OXIDIZE COPPER CABLE SHALL NOT BE ALLOWED FOR SOLDERING OPERATIONS. SEE DETAIL BELOW RIGHT.

7. PREFORMED DETECTOR LOOPS SHALL BE USED, AS SHOWN ON THE PLANS, WHERE NEW CONCRETE PAVEMENT IS PROPOSED. THE INSTALLATION OF PREFORMED LOOPS SHALL BE IN ACCORDANCE WITH THE DISTRICT 1 SPECIFICATIONS OR AS DIRECTED BY THE ENGINEER.

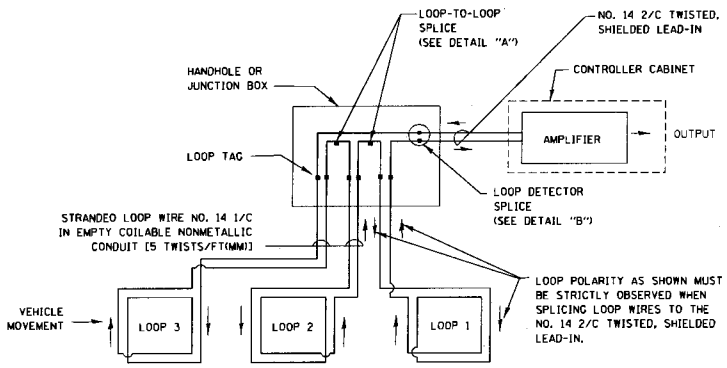

DETECTOR LOOP WIRING SCHEMATIC

- LOOPS SHALL BE SPLICED IN SERIES.
- SAW-CUTS SHALL BE A MINIMUM WIDTH OF 5/16" (8 mm).
- SAW-CUT DEPTHS SHALL BE 3" (75 mm). IF IN CONCRETE, THE SAW-CUT DEPTH SHALL BE TO THE TOP OF THE REINFORCEMENT.
- LOOP CORNERS SHALL BE DRILLED WITH A 2" (50 mm) DIAMETER CORE.

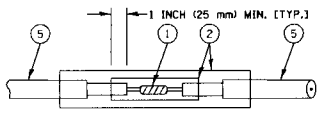

DETAIL "A"
LOOP-TO-LOOP SPLICE

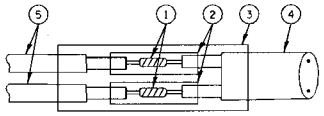

DETAIL "B"
LOOP-TO-CONTROLLER SPLICE

TYPE I LOOP

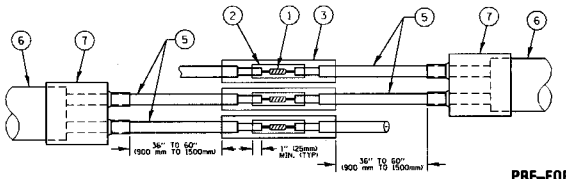

DETAIL "A"
LOOP-TO-LOOP SPLICE

PRE-FORMED LOOP

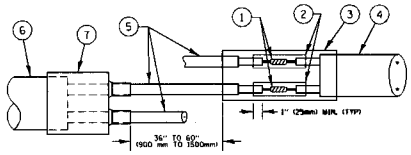

DETAIL "B"
LOOP-TO-CONTROLLER SPLICE

LOOP LEAD-IN CABLE TAG

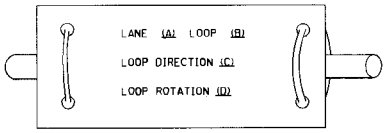

A. LANE 1 IS THE LANE CLOSEST TO THE CENTERLINE OF THE ROADWAY

B. LOOP #1 IS THE LOOP IN THE LANE CLOSEST TO THE INTERSECTION.

C. LABEL LOOP CABLE "IN" OR LOOP CABLE "OUT".

D. LABEL LOOP CABLE CLOCKWISE OR LOOP CABLE COUNTERCLOCKWISE.

LOOP DETECTOR SPLICE

1. WESTERN UNION SPLICE SOLDERED WITH ROSIN CORE FLUX. ALL EXPOSED SURFACES OF THE SOLDER SHALL BE SMOOTH. THE WESTERN UNION SPLICES SHALL BE STAGGERED.
2. WCSMW 30/100 HEAT SHRINK TUBE, MINIMUM LENGTH 3" (75 mm), UNDERWATER GRADE.
3. WCS 200/750 HEAT SHRINK TUBE, MINIMUM LENGHT 6" (150 mm), UNDERWATER GRADE.
4. NO. 14 2/C TWISTED, SHIELDED CABLE.
5. LOOP CONDUCTOR WITH FLEXIBLE PLASTIC TUBE.
6. PRE-FORMED LOOP
7. XL POLYOLEFIN 2 CONDUCTOR BREAKOUT SEALS. TYCO CBR-2 OR APPROVED EQUAL

FILE NAME = c:\pw_work\pwidot\footem,j\d0198315\ts05.dgn	USER NAME = footem,j	DESIGNED - DAD	REVISED - DAG 1-1-14	STATE OF ILLINOIS DEPARTMENT OF TRANSPORTATION	DISTRICT ONE STANDARD TRAFFIC SIGNAL DESIGN DETAILS		F.A. RTE.	SECTION	COUNTY	TOTAL SHEETS	SHEET NO.
		DRAWN - BCK	REVISED -								
	PLOT SCALE = 50.0000 ' / in.	CHECKED - DAD	REVISED -					TS-05	CONTRACT NO.		
	PLOT DATE = 1/13/2014	DATE - 10-28-09	REVISED -		SCALE: NONE	SHEET NO. 2 OF 7 SHEETS	STA.	TO STA.	FED. ROAD DIST. NO. 1	ILLINOIS	FED. AID PROJECT

LOOPS NEXT TO SHOULDERS

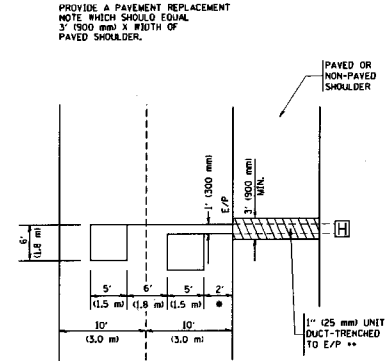

* = (600 mm)

** UNIT DUCT IS TO BE SHOWN ON PLAN SHEETS BUT SHALL NOT BE INCLUDED IN THE PAY ITEMS.

LEFT TURN LANES WITH MEDIANS
VOLUME DENSITY ("FAR OUT" DETECTION) ON SAME APPROACH

(PROTECTED / PERMITTED LEFT TURN PHASING)

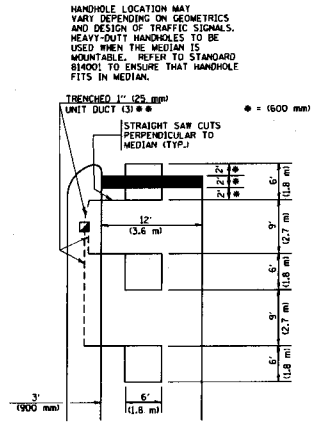

** UNIT DUCT IS TO BE SHOWN ON PLAN SHEETS BUT SHALL NOT BE INCLUDED IN THE PAT ITEMS.

NOTE: DUAL LEFT TURNS NOT SHOWN REFER TO PLAN SHEET FOR DETECTOR LOOP REPLACEMENT

LEFT TURN LANES WITHOUT MEDIANS
VOLUME DENSITY ("FAR OUT" DETECTION) ON SAME APPROACH

(PROTECTED / PERMITTED LEFT TURN PHASING)

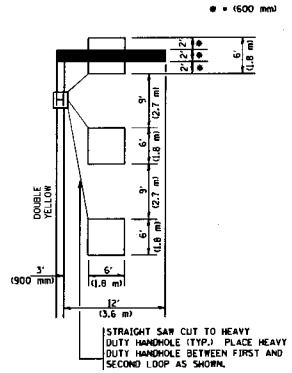

NOTE: DUAL LEFT TURNS NOT SHOWN REFER TO PLAN SHEET FOR DETECTOR LOOP REPLACEMENT

ARTERIAL-VOLUME DENSITY ("FAR OUT" DETECTION)
CROSS STREET-VOLUME DENSITY ("FAR OUT" DETECTION)

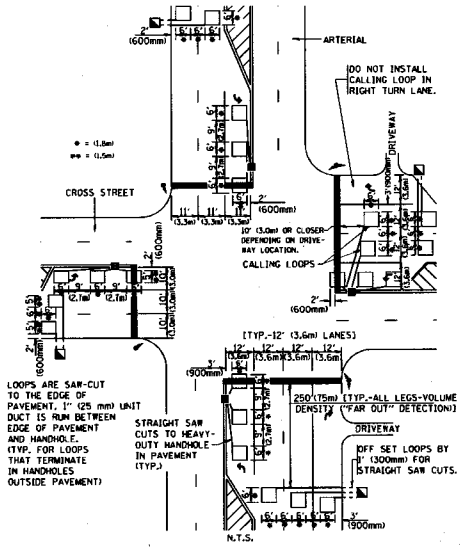

DETAIL 1
N.T.S.

ARTERIAL-VOLUME DENSITY ("FAR OUT" DETECTION)
CROSS STREET-NON VOLUME DENSITY ("UPTIGHT" PRESENCE DETECTION)

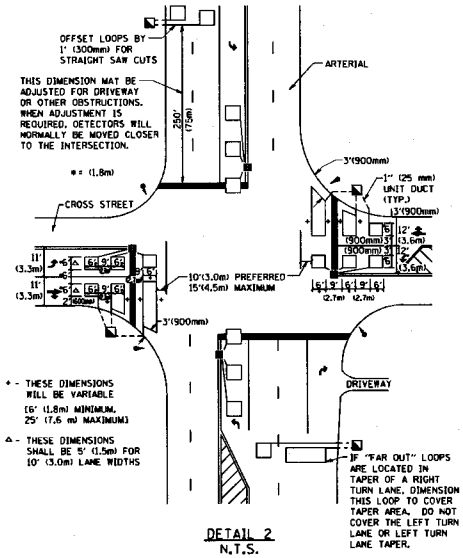

DETAIL 2
N.T.S.

NOTES:

VEHICLES LOOP DETECTORS

* ALL LEAD IN CABLE SHALL BE TWO CONDUCTOR NO. 14 TWISTED, SHIELDED.
* EACH DETECTOR LOOP SHALL HAVE ITS OWN SAW CUT FROM THE LOOP TO THE EDGE OF PAVEMENT OR TO A HANDHOLE IN THE PAVEMENT.
* EACH DETECTOR LOOP SHALL HAVE ITS OWN ONE INCH (25 mm) UNIT DUCT BETWEEN THE EDGE OF PAVEMENT AND THE FIRST HANDHOLE OR JUNCTION BOX. EACH UNIT DUCT RUN SHALL BE SHOWN ON THE PLANS BY THE DESIGNER, BUT SHALL NOT BE PAID FOR SEPARATLY. THIS ITEM IS INCIDENTAL TO THE PAY ITEM FOR DETECTOR LOOPS.
* ONE DIMENSION OF ALL DETECTOR LOOPS SHALL BE SIX FEET (1.8 m)
* EACH LANE OF NON-LOCKING, PRESENCE DETECTION AND EACH LANE OF A DOUBLE LEFT TURN LANE REQUIRES A SEPARATE INDUCTIVE LOOP DETECTOR AND LEAD IN CABLE.
* WHEN NON-LOCKING, PRESENCE DETECTION IS USED, MORE THAN ONE LOOP PER LANE IS REQUIRED BEHIND THE STOP BAR (I.e. 1-1/2, 1-3/4, 2).
* WHEN SYSTEM LOOPS ARE REQUIRED ON AN APPROACH OF AN INTERSECTION, THE LOOPS USED FOR VOLUME DENSITY AND INTERSECTION TIMING SHALL ALSO BE USED AS SYSTEM DETECTORS. EACH ONE OF THESE TYPE OF LOOPS REQUIRES A SEPARATE TWO CONDUCTOR NO. 14 TWISTED SHIELDED CABLE AND A SEPARATE INDUCTIVE LOOP DETECTOR WHEN NEW CONTROLLERS ARE UTILIZED. THE DESIGNER SHALL LABEL THESE TYPES OF LOOPS AS "INTERSECTION AND SAMPLING (SYSTEM) DETECTORS" ON THE SIGNAL LAYOUT, THE INTERCONNECT PLAN AND THE SYSTEM CABLE PLAN. WHEN AN EXISTING CONTROLLER IS UTILIZED FOR THIS TYPE OF DETECTION, THE PAY ITEM "INDUCTIVE LOOP DETECTOR WITH SYSTEM OUTPUT" SHOULD BE USED.

PLACEMENT OF DETECTORS

THE FOLLOWING FIGURES REPRESENT THE MOST COMMON DETECTOR LOOP LOCATIONS AND SIZES. ADJUSTMENTS WILL BE NECESSARY FOR SPECIFIC GEOMETRIC CONSIDERATIONS.

LOCATIONS AND DEMENSIONS OF DETECTOR LOOPS ARE REQUIRED ON ALL SIGNAL LAYOUT PLAN SHEETS.

"FAR OUT" DETECTION REFERS TO LOCKING, PRESENCE TYPE DETECTION LOCATED IN THRU LANES, RIGHT TURN LANES, AND RIGHT TURN LANE TAPER AREAS (IF APPLICABLE), USUALLY 250' (75 m) IN ADVANCE OF STOP BARS. "UPTIGHT" DETECTION REFERS TO NON-LOCKING PRESENCE TYPE DETECTION LOCATED IN ALL LANES AND 10'-15' (3.0 m-4.5 m) BEHIND THE CROSSING STREET'S EDGE OF PAVEMENT EXTENDED.

NOTE:

ALL DETAILS AND NOTES SHOWN ARE FROM THE I.D.O.T. DISTRICT 1 TRAFFIC SIGNAL DESIGN GUIDELINES DATED JANUARY 1995

THIS DRAWING HAS BEEN PREPARED TO ASSIST THE RESIDENT ENGINEER FOR ALL ROADWAY RESURFACING OR S.M.A.R.T. PROJECTS WHERE THE DIMENSIONS ARE NOT SHOWN ON THE PLANS AND THE FINAL LOCATIONS FOR CROSSWALKS OR STOP BARS ARE NOT DETERMINED.

FILE NAME = H:\dsmtd\22x34\td87.dgn	USER NAME = geglionobt	DESIGNED -	REVISED -	STATE OF ILLINOIS DEPARTMENT OF TRANSPORTATION	DISTRICT 1 – DETECTOR LOOP INSTALLATION DETAILS FOR ROADWAY RESURFACING		F.A. RTE.	SECTION	COUNTY	TOTAL SHEETS / SHEET NO.
		DRAWN -	REVISED -							
	PLOT SCALE = 50.0000 ' / IN.	CHECKED - R.K.F.	REVISED -					TS-07	CONTRACT NO.	
	PLOT DATE = 1/4/2008	DATE -	REVISED -		SCALE: NONE	SHEET NO. 1 OF 1 SHEETS	STA.	TO STA.	FED. ROAD DIST. NO. 1 ILLINOIS	FED. AID PROJECT

COUNTY OF COOK
CHICAGO, ILLINOIS
PROPOSAL

For a County Highway Improvement in the County of Cook, State of Illinois,

known as **PAVEMENT PRESERVATION AND REHABILITATION PROGRAM 2015 - SOUTH REBID**

Route **VARIOUS** Section **14-PPRPS-01-PV**

107th Street - 88th Avenue to Kean Avenue
103rd Street - 88th Avenue to Kean Avenue
Plainfield Road - Willow Springs Rd to East Avenue
Kedzie Avenue - At Governors Highway
Kedzie Avenue - 183rd Street to 175th Street
Sauk Trail - Cicero Avenue to Governors Highway
Wolf Road - at 139th Street

LOCATION OF IMPROVEMENT

The proposed improvements are part of the public highway system in the County of Cook, State of Illinois, located described below and indicated on the map showing the County Highway System on file in the office of the County Clerk and also in the office of the Illinois Department of Transportation, Division of Highways, Springfield, Illinois.

107th Street - 88th Avenue to Kean Avenue: This section begins on the east edge of pavement of Kean Avenue and continues to the end of the taper approximately 273 feet of the west edge of pavement of 88th Avenue.

103rd Street - 88th Avenue to Kean Avenue: This section begins on the east edge of pavement of Kean Avenue and continues to the west edge of pavement of 88th Avenue.

Plainfield Road - Willow Springs Rd. to East Avenue: This section begins on the east edge of pavement of Willow Springs Road and continues to the west edge of pavement of East Avenue.

Kedzie Avenue - At Governors Highway: This section begins approximately 450 feet south of the centerline of Governors Highway and continues approximately 1000 feet north.

Kedzie Avenue - 183rd Street to 175th Street: This section begins on the south edge of pavement of 183rd Street and continues to the south edge of pavement of 175th Street.

Sauk Trail - Cicero Avenue to Governors Highway: This section begins approximately 42 feet east of the east edge of pavement of Cicero Avenue and continues to the west edge of pavement of Governors Highway.

Wolf Road - at 139th Street: This section consists of replacing a culvert approximately 20 feet east of the east edge of pavement of 139th Street.

DESCRIPTION OF IMPROVEMENT

107th Street - 88th Avenue to Kean Avenue
This includes grinding and overlaying of the existing hot-mix asphalt pavements, patching, shoulder repair, drainage repairs, improvements and adjustments, sidewalk removal and ADA compliant ramp construction, traffic control and protection, striping, restoration and other appurtenant work as required.

103rd Street - 88th Avenue to Kean Avenue
This includes grinding and overlaying of the existing hot-mix asphalt pavements, patching, shoulder repair, drainage repairs, improvements and adjustments, sidewalk removal and ADA compliant ramp construction, traffic control and protection, striping, restoration and other appurtenant work as required.

Plainfield Road - Willow Springs Rd to East Avenue
This includes grinding and overlaying of the existing hot-mix asphalt pavements, patching, shoulder repair, drainage repairs, improvements and adjustments, sidewalk removal and ADA compliant ramp construction, traffic control and protection, striping, restoration and other appurtenant work as required.

Kedzie Avenue - At Governors Highway
This project consists of Class B Patching and Diamond Grinding the existing Portland cement concrete pavement. Also included in this project is replacement of the pavement markings, curb and gutter repair, where directed by the Engineer, ditch regrading, drainage additions and adjustments, traffic signal improvements and other related road work as required.

Kedzie Avenue - 183rd Street to 175th Street
This project consists of Class B Patching and Diamond Grinding the existing Portland cement concrete pavement. Also included in this project is replacement of the pavement markings, curb and gutter repair, where directed by the Engineer, ditch regrading, drainage additions and adjustments, traffic signal improvements and other related road work as required.

Sauk Trail - Cicero Avenue to Governors Highway
This project consists of Class B Patching and Diamond Grinding the existing Portland cement concrete pavement. Also included in this project is replacement of the pavement markings, curb and gutter repair, where directed by the Engineer, ditch regrading, drainage additions and adjustments, traffic signal improvements and other related road work as required.

Wolf Road - at 139th Street
This project consists of replacing the existing storm sewer and the adjacent pavement replacement, ditch regrading and landscaping.

ECONOMIC DISCLOSURE STATEMENT
AND EXECUTION DOCUMENTS

INDEX

Section	Description
1	**Identification of Subcontractors, Suppliers and Sub-consultants Form**
2	**Payables Electronics Program ("E-PAYABLES")**
3	**Veteran's Preference for VBE and SDVBE**
4	**Affidavit Veteran's Workplace Preference Public Works Contracts**
5	**Economic Disclosure Statement and Execution Document Index**
6	**Instructions for Completion of Economic Disclosure Statement and Execution Documents**
7	**Certifications** Lobby, Local Business Preference, Child Support Enforcement Ordinance, Real Estate Ownership Affidavit of Child Support Obligations Disclosure of Ownership Interest Statement Familial Relationship Disclosure Provision Familial Relationship Disclosure Form
8	**Execution Pages** Contract and EDS Execution Page Cook County Signature Page
9	**Insert IDOT Certificate of Eligibility**
10	**Insert IDOT Affidavit of Availability**
11	**Labor Standards & Prevailing Wage Requirements** Contractor's Certification Concerning Labor Standards & Prevailing Wage Requirements Form Subcontractor's Certification Concerning Labor Standards & Prevailing Wage Requirements Form
12	**MBE/WBE Forms** MBE/WBE Utilization Plan MBE/WBE Letter of Intent Petition for Reduction/Waiver of MBE/WBE Participation

OCPO ONLY:
◯ Disqualification
◯ Check Complete

Section 1: Cook County
Office of the Chief Procurement Officer
Identification of Subcontractor/Supplier/Subconsultant Form

The Bidder/Proposer/Respondent ("the Contractor") will fully complete and execute and submit an Identification of Subcontractor/Supplier/Subconsultant Form ("ISF") with each Bid, Request for Proposal, and Request for Qualification. **The Contractor must complete the ISF for each Subcontractor, Supplier or Subconsultant which shall be used on the Contract.** In the event that there are any changes in the utilization of Subcontractors, Suppliers or Subconsultants, the Contractor must file an updated ISF.

Bid/RFP/RFQ No.: **1523-14815**	Date: **8/13/15**
Total Bid or Proposal Amount: **$4,434,000.00**	Contract Title: **Pavement Preservation and Rehabilitation Program 2015 - South Rebid**
Contractor: **K-Five Construction**	Subcontractor/Supplier/ Subconsultant to be added or substitute: **Dynamicx Enterprises**
Authorized Contact for Contractor: **Brian Johnson**	Authorized Contact for Subcontractor/Supplier/ Subconsultant: **Nicolas Diaz**
Email Address (Contractor): **brianj@k-five.net**	Email Address (Subcontractor): **dynamicx4751@comcast.net**
Company Address (Contractor): **13769 Main Street**	Company Address (Subcontractor): **4751 S. Central Avenue**
City, State and Zip (Contractor): **Lemont, IL 60439**	City, State and Zip (Subcontractor): **Chicago, IL 60638**
Telephone and Fax (Contractor) **(630) 257-5600** **(630) 257-6788**	Telephone and Fax (Subcontractor) **(708)929-4551** **(708) 929-4553**
Estimated Start and Completion Dates (Contractor) **September 2015** **November 2016**	Estimated Start and Completion Dates (Subcontractor) **September 2015** **November 2016**

Note: Upon request, a copy of all written subcontractor agreements must be provided to the OCPO.

Description of Services or Supplies	Total Price of Subcontract for Services or Supplies
Concrete Items	**$ 1,202,408.42**

The subcontract documents will incorporate all requirements of the Contract awarded to the Contractor as applicable. The subcontract will in no way hinder the Subcontractor/Supplier/Subconsultant from maintaining its progress on any other contract on which it is either a Subcontractor/Supplier/Subconsultant or principal contractor. This disclosure is made with the understanding that the Contractor is not under any circumstances relieved of its abilities and obligations, and is responsible for the organization, performance, and quality of work. **This form does not approve any proposed changes, revisions or modifications to the contract approved MBE/WBE Utilization Plan. Any changes to the contract's approved MBE/WBE/Utilization Plan must be submitted to the Office of the Contract Compliance.**

Contractor **K-Five Construction**

Name **Brian Johnson**

Title **Estimator**

Prime Contractor Signature Brian Johnson Date **8/13/2015**

OCPO ONLY:
◯ Disqualification
◯ Check Complete

Section 1: Cook County
Office of the Chief Procurement Officer
Identification of Subcontractor/Supplier/Subconsultant Form

The Bidder/Proposer/Respondent ("the Contractor") will fully complete and execute and submit an Identification of Subcontractor/Supplier/Subconsultant Form ("ISF") with each Bid, Request for Proposal, and Request for Qualification. **The Contractor must complete the ISF for each Subcontractor, Supplier or Subconsultant which shall be used on the Contract**. In the event that there are any changes in the utilization of Subcontractors, Suppliers or Subconsultants, the Contractor must file an updated ISF.

Bid/RFP/RFQ No.: **1523-14815**	Date: **8/13/15**
Total Bid or Proposal Amount: **$4,434,000.00**	Contract Title: **Pavement Preservation and Rehabilitation Program 2015 - South Rebid**
Contractor: **K-Five Construction**	Subcontractor/Supplier/ Subconsultant to be added or substitute: **GEM Construction**
Authorized Contact for Contractor: **Brian Johnson**	Authorized Contact for Subcontractor/Supplier/ Subconsultant: **JoAnn Raimondi**
Email Address (Contractor): **brianj@k-five.net**	Email Address (Subcontractor): **gemconstruinc@comcast.net**
Company Address (Contractor): **13769 Main Street**	Company Address (Subcontractor): **348 Woodlane Court**
City, State and Zip (Contractor): **Lemont, IL 60439**	City, State and Zip (Subcontractor): **Wooddale, IL 60191**
Telephone and Fax (Contractor) **(630) 257-5600** **(630) 257-6788**	Telephone and Fax (Subcontractor) **(630) 620-7298** **SAME**
Estimated Start and Completion Dates (Contractor) **September 2015** **November 2016**	Estimated Start and Completion Dates (Subcontractor) **September 2015** **November 2016**

Note: Upon request, a copy of all written subcontractor agreements must be provided to the OCPO.

Description of Services or Supplies	Total Price of Subcontract for Services or Supplies
Class B Patching	**$ 253,000**

The subcontract documents will incorporate all requirements of the Contract awarded to the Contractor as applicable. The subcontract will in no way hinder the Subcontractor/Supplier/Subconsultant from maintaining its progress on any other contract on which it is either a Subcontractor/Supplier/Subconsultant or principal contractor. This disclosure is made with the understanding that the Contractor is not under any circumstances relieved of its abilities and obligations, and is responsible for the organization, performance, and quality of work. **This form does not approve any proposed changes, revisions or modifications to the contract approved MBE/WBE Utilization Plan. Any changes to the contract's approved MBE/WBE/Utilization Plan must be submitted to the Office of the Contract Compliance.**

Contractor **K-Five Construction**

Name **Brian Johnson**

Title **Estimator**

Prime Contractor Signature Brian Johnson Date **8/13/2015**

Section 2: OFFICE OF THE COOK COUNTY COMPTROLLER ELECTRONIC PAYABLES PROGRAM ("E-PAYABLES")

FOR INFORMATION PURPOSES ONLY

This document describes the Office of the Cook County Comptroller's Electronic Payables Program ("E-Payables"). If you wish to participate in E-Payables, please contact the Cook County Comptroller's Office, Accounts Payable, 118 N. Clark Street, Room 500, Chicago, IL 60602.

DESCRIPTION

To increase payment efficiency and timeliness, we have introduced E-Payables program, a new payment initiative to our accounts payable model. This new initiative utilizes a Visa purchasing card and operates through the Visa payment network. This is County's preferred method of payment and your participation in our Visa purchasing card program will provide mutual benefits both to your organization and ours.

As a vendor, you may experience the following benefits by accepting this new payment type:

- Improved cash flow and accelerated payment
- Reduced paperwork and a more streamlined accounts receivable process
- Elimination of stop payment issues
- Reduced payment delays
- Reduced costs for handling paper checks
- Payments settled directly to your merchant account

There are two options within this initiative:

1. **Dedicated Credit Card – "PULL" Settlement**

For this option, you will have an assigned dedicated credit card to be used for each payment. You will provide a point of contact within your organization who will keep credit card information on file. Each time a payment is made, you will receive a remittance advice via email detailing the invoices being paid. Each time you receive a remittance advice, you will process payments in the same manner you process credit card transactions today.

2. **One-Time Use Credit Card – "SUGA" Settlement**

For this option, you will provide a point of contact within your organization who will receive an email notification authorizing you to process payments in the same manner you process credit card transactions today. Each time payment is made, you will receive a remittance advice, via email, detailing the invoices being paid. Also, each time you receive a remittance advice, you will receive a new, unique credit card number. This option is ideal for suppliers who are unable to keep credit card account information on file.

REMAINDER OF PAGE INTENTIONALLY LEFT BLANK

Section 3: VETERAN'S PREFERENCE FOR VBE AND SDVBE

INSTRUCTIONS

In accordance with Section 34-236(b) of the Cook County Procurement Code, the Chief Procurement Officer ("CPO") shall give a preference of **five percent of the amount of the Contract** to a Responsible and Responsive Veterans Owned Business Enterprise (VBE) and Service Disabled Veterans Business Enterprise (SDVBE) requesting a preference for Bids. ***All Bidders who are requesting this preference must complete the form, and attach a copy of its certification. Prior to applying the five percent preference, the CPO must receive approval from the Contract Compliance Director (CCD) that the Bidder is a qualified VBE or SDVBE.***

DEFINITIONS

Veteran-owned Business Enterprise (VBE) means a small business (i) that is at least 51 percent owned, controlled and managed by one or more Eligible Veterans or in the case of a corporation, at least 51 percent or more of the stock of which is owned, controlled and managed by one or more Eligible Veterans; (ii) that has its home office in Illinois, as certified by the Contract Compliance Director (CCD) under policies and procedures promulgated by the CCD.

Eligible Veteran means a person who (i) has been either a member of the armed forces of the United States or, while a citizen of the United States, was a member of the armed forces of allies of the United States in time of hostilities with a foreign country and (ii) has served under one or more of the following conditions: (a) the veteran served a total of at least 6 months; (b) the veteran served for the duration of hostilities regardless of the length of the engagement; (c) the veteran was discharged on the basis of hardship; or (d) the veteran was released from active duty because of a service connected disability and was discharged under honorable conditions.

Armed forces of the United States means the United States Army, Navy, Air Force, Marine Corps, Coast Guard or service in active duty as defined under 38 U.S.C. Section 101. Service in the Merchant Marine that constitutes active duty under Section 401 of federal Public Act 95-202 shall also be considered service in the armed forces for purposes of this Division.

Service-Disabled Veteran-owned Business Enterprise (SDVBE) means a small business (i) that is at least 51 percent owned, controlled, and managed by one or more qualified service disabled veterans or in the case of a corporation, at least 51 percent or more of the stock of which is owned, controlled and managed by one or more Service Disabled Veterans; (ii) that has its home office in Illinois, as certified by the CCD under policies and procedures promulgated by the CCD.

Service-Disabled Veteran means an Eligible Veteran who has been found to have 10 percent or more service connected disability by the United States Department of Veterans Affairs or the United States Department of Defense.

Service-connected disability means a disability incurred in the line of duty in the active military, naval or air service as described in 38 U.S.C. 101(16).

Small Business means a small business as defined by the U.S. Small Business Administration, pursuant to the business size standards found in 13 CFR Part 121, as related to the nature of the work the Person seeks to perform on Contracts. A Person is not an eligible small business enterprise in any calendar fiscal year in which its gross receipts, averaged over the Person's previous five fiscal years, exceed the size standards of 13 CFR Part 121.

REQUEST FOR PREFERENCE

_____ Bidder is requesting to receive a preference as a VBE. By requesting this preference, Bidder certifies that it meets the definition of a VBE, as set forth above and has included a copy of its certification.

_____ Bidder is requesting to receive a preference as a SDVBE. By requesting this preference, Bidder certifies that it meets The definition of a SDVBE, as set forth above and has included a copy of its certification.

_____	_____
Bidder (please print or type)	Title
_____	_____
Signature	Date
_____	_____
E-mail address	Phone Number
Subscribed to and sworn before me this ____ day of _____, 20____.	My commission expires:
X_____	_____
Notary Public Signature	**Notary Seal**

Section 4: AFFIDAVIT
VETERAN'S WORKPLACE PREFERENCE PUBLIC WORKS CONTRACTS

INSTRUCTIONS

In accordance with Section 34-236(a) of the Cook County Procurement Code, the Chief Procurement Officer ("CPO") shall give a preference of **one percent of the amount of the Contract** to a Responsible and Responsive Contractor for a Public Works Contract when such Contractor has committed by affidavit to utilize Eligible Veterans for at least five percent of the hours worked under such Contract. Failure to utilize Eligible Veterans in accordance with the affidavit will result in breach of contract. ***All Bidders who are requesting this preference must complete this Affidavit.***

DEFINITIONS

Eligible Veteran means a person who (i) has been either a member of the armed forces of the United States or, while a citizen of the United States, was a member of the armed forces of allies of the United States in time of hostilities with a foreign country and (ii) has served under one or more of the following conditions: (a) the veteran served a total of at least 6 months; (b) the veteran served for the duration of hostilities regardless of the length of the engagement; (c) the veteran was discharged on the basis of hardship; or (d) the veteran was released from active duty because of a service connected disability and was discharged under honorable conditions.

Armed forces of the United States means the United States Army, Navy, Air Force, Marine Corps, Coast Guard or service in active duty as defined under 38 U.S.C. Section 101. Service in the Merchant Marine that constitutes active duty under Section 401 of federal Public Act 95-202 shall also be considered service in the armed forces for purposes of this Division.

Public Works means all fixed works constructed or demolished by the County, or paid for wholly or in part out of public funds administered by the County. "Public Works" as defined herein includes all projects financed in whole or in part with bonds, grants, loans, or other funds made available by or through federal or State government, or the County. "Public Works" does not include projects undertaken by the owner at an owner-occupied single-family residence or at an owner-occupied unit of a multifamily residence. "Public Works" includes any maintenance, repair, assembly, or disassembly work performed on equipment whether owned, leased, or rented.

I, _____, being first duly sworn, do depose and state as follows:

1. I am the authorized representative and I have the authority to make this Affidavit for and on behalf of the Bidder.

2. The Bidder is requesting the CPO grant a preference of one percent of the amount of the Contract in accordance with Section 34-236(a) of the Cook Procurement Code, as set forth above.

3. In accordance with the Cook County Procurement Code, the Bidder shall commit to utilize Eligible Veterans for at least five percent of the hours worked under the Contract. The Eligible Veterans must be employed directly by the Bidder.

4. The Bidder shall be solely responsible for requesting all persons to provide Bidder with appropriate documentation to ensure that such person(s) is an Eligible Veteran, as defined above. Bidder certifies, that by seeking this preference, it shall maintain appropriate documentation, including payroll records, which show the number of hours worked by Eligible Veterans.

5. The Bidder certifies, affirms and acknowledges that the failure to utilize Eligible Veterans in accordance with this Affidavit will result in a breach of contract, which will allow the County to seek all rights and remedies as set forth in the Contract and any other appropriate remedies available in equity or at law.

_____ Bidder (please print or type)	_____ Title
_____ Signature	_____ Date
_____ E-mail address	_____ Phone Number
Subscribed to and sworn before me this ____ day of _____, 20_____.	My commission expires:
X_____ **Notary Public Signature**	_____ **Notary Seal**

Section 5: COOK COUNTY
ECONOMIC DISCLOSURE STATEMENT
AND EXECUTION DOCUMENT
INDEX

Section	Description	Pages
6	Instructions for Completion of EDS	EDS i - ii
7	Certifications	EDS 1– 2
7	Economic and Other Disclosures, Affidavit of Child Support Obligations and Disclosure of Ownership Interest	EDS 3 – 12
8	Contract and EDS Execution Page	EDS 13-15
8	Cook County Signature Page	EDS 16

Section 6: INSTRUCTIONS FOR COMPLETION OF ECONOMIC DISCLOSURE STATEMENT AND EXECUTION DOCUMENT

This Economic Disclosure Statement and Execution Document ("EDS") is to be completed and executed by every Bidder on a County contract, every Proposer responding to a Request for Proposals, and every Respondent responding to a Request for Qualifications, and others as required by the Chief Procurement Officer. The execution of the EDS shall serve as the execution of a contract awarded by the County. The Chief Procurement Officer reserves the right to request that the Bidder or Proposer, or Respondent provide an updated EDS on an annual basis.

Definitions. Terms used in this EDS and not otherwise defined herein shall have the meanings given to such terms in the Instructions to Bidders, General Conditions, Request for Proposals, Request for Qualifications, as applicable.

Affiliate means a person that directly or indirectly through one or more intermediaries, Controls is Controlled by, or is under common Control with the Person specified.

Applicant means a person who executes this EDS.

Bidder means any person who submits a Bid.

Code means the Code of Ordinances, Cook County, Illinois available on municode.com.

Contract shall include any written document to make Procurements by or on behalf of Cook County.

Contractor or *Contracting Party* means a person that enters into a Contract with the County.

Control means the unfettered authority to directly or indirectly manage governance, administration, work, and all other aspects of a business.

EDS means this complete Economic Disclosure Statement and Execution Document, including all sections listed in the Index and any attachments.

Joint Venture means an association of two or more Persons proposing to perform a for-profit business enterprise. Joint Ventures must have an agreement in writing specifying the terms and conditions of the relationship between the partners and their relationship and respective responsibility for the Contract

Lobby or lobbying means to, for compensation, attempt to influence a County official or County employee with respect to any County matter.

Lobbyist means any person who lobbies.

Person or *Persons* means any individual, corporation, partnership, Joint Venture, trust, association, Limited Liability Company, sole proprietorship or other legal entity.

Prohibited Acts means any of the actions or occurrences which form the basis for disqualification under the Code, or under the Certifications hereinafter set forth.

Proposal means a response to an RFP.

Proposer means a person submitting a Proposal.

Response means response to an RFQ.

Respondent means a person responding to an RFQ.

RFP means a Request for Proposals issued pursuant to this Procurement Code.

RFQ means a Request for Qualifications issued to obtain the qualifications of interested parties.

Section 6: INSTRUCTIONS FOR COMPLETION OF ECONOMIC DISCLOSURE STATEMENT AND EXECUTION DOCUMENT

Section 1: Instructions. Section 1 sets forth the instructions for completing and executing this EDS.

Section 2: Certifications. Section 2 sets forth certifications that are required for contracting parties under the Code and other applicable laws. Execution of this EDS constitutes a warranty that all the statements and certifications contained, and all the facts stated, in the Certifications are true, correct and complete as of the date of execution.

Section 3: Economic and Other Disclosures Statement. Section 3 is the County's required Economic and Other Disclosures Statement form. Execution of this EDS constitutes a warranty that all the information provided in the EDS is true, correct and complete as of the date of execution, and binds the Applicant to the warranties, representations, agreements and acknowledgements contained therein.

Required Updates. The Applicant is required to keep all information provided in this EDS current and accurate. In the event of any change in the information provided, including but not limited to any change which would render inaccurate or incomplete any certification or statement made in this EDS, the Applicant shall supplement this EDS up to the time the County takes action, by filing an amended EDS or such other documentation as is required.

Additional Information. The County's Governmental Ethics and Campaign Financing Ordinances impose certain duties and obligations on persons or entities seeking County contracts, work, business, or transactions, and the Applicant is expected to comply fully with these ordinances. For further information please contact the Director of Ethics at (312) 603-4304 (69 W. Washington St. Suite 3040, Chicago, IL 60602) or visit the web-site at cookcountyil.gov/ethics-board-of.

Authorized Signers of Contract and EDS Execution Page. If the Applicant is a corporation, the President and Secretary must execute the EDS. In the event that this EDS is executed by someone other than the President, attach hereto a certified copy of that section of the Corporate By-Laws or other authorization by the Corporation, satisfactory to the County that permits the person to execute EDS for said corporation. If the corporation is not registered in the State of Illinois, a copy of the Certificate of Good Standing from the state of incorporation must be submitted with this Signature Page.

If the Applicant is a partnership or joint venture, all partners or joint venturers must execute the EDS, unless one partner or joint venture has been authorized to sign for the partnership or joint venture, in which case, the partnership agreement, resolution or evidence of such authority satisfactory to the Office of the Chief Procurement Officer must be submitted with this Signature Page.

If the Applicant is a member-managed LLC all members must execute the EDS, unless otherwise provided in the operating agreement, resolution or other corporate documents. If the Applicant is a manager-managed LLC, the manager(s) must execute the EDS. The Applicant must attach either a certified copy of the operating agreement, resolution or other authorization, satisfactory to the County, demonstrating such person has the authority to execute the EDS on behalf of the LLC. If the LLC is not registered in the State of Illinois, a copy of a current Certificate of Good Standing from the state of incorporation must be submitted with this Signature Page.

If the Applicant is a Sole Proprietorship, the sole proprietor must execute the EDS.

A "Partnership" "Joint Venture" or "Sole Proprietorship" operating under an Assumed Name must be registered with the Illinois county in which it is located, as provided in 805 ILCS 405 (2012), and documentation evidencing registration must be submitted with the EDS.

Section 7: CERTIFICATIONS

THE FOLLOWING CERTIFICATIONS ARE MADE PURSUANT TO STATE LAW AND THE CODE. THE APPLICANT IS CAUTIONED TO CAREFULLY READ THESE CERTIFICATIONS PRIOR TO SIGNING THE SIGNATURE PAGE. SIGNING THE SIGNATURE PAGE SHALL CONSTITUTE A WARRANTY BY THE APPLICANT THAT ALL THE STATEMENTS, CERTIFICATIONS AND INFORMATION SET FORTH WITHIN THESE CERTIFICATIONS ARE TRUE, COMPLETE AND CORRECT AS OF THE DATE THE SIGNATURE PAGE IS SIGNED. THE APPLICANT IS NOTIFIED THAT IF THE COUNTY LEARNS THAT ANY OF THE FOLLOWING CERTIFICATIONS WERE FALSELY MADE, THAT ANY CONTRACT ENTERED INTO WITH THE APPLICANT SHALL BE SUBJECT TO TERMINATION.

A. PERSONS AND ENTITIES SUBJECT TO DISQUALIFICATION

No person or business entity shall be awarded a contract or sub-contract, for a period of five (5) years from the date of conviction or entry of a plea or admission of guilt, civil or criminal, if that person or business entity:

1) Has been convicted of an act committed, within the State of Illinois, of bribery or attempting to bribe an officer or employee of a unit of state, federal or local government or school district in the State of Illinois in that officer's or employee's official capacity;

2) Has been convicted by federal, state or local government of an act of bid-rigging or attempting to rig bids as defined in the Sherman Anti-Trust Act and Clayton Act. Act. 15 U.S.C. Section 1 *et seq.;*

3) Has been convicted of bid-rigging or attempting to rig bids under the laws of federal, state or local government;

4) Has been convicted of an act committed, within the State, of price-fixing or attempting to fix prices as defined by the Sherman Anti-Trust Act and the Clayton Act. 15 U.S.C. Section 1, *et seq.;*

5) Has been convicted of price-fixing or attempting to fix prices under the laws the State;

6) Has been convicted of defrauding or attempting to defraud any unit of state or local government or school district within the State of Illinois;

7) Has made an admission of guilt of such conduct as set forth in subsections (1) through (6) above which admission is a matter of record, whether or not such person or business entity was subject to prosecution for the offense or offenses admitted to; or

8) Has entered a plea of *nolo contendere* to charge of bribery, price-fixing, bid-rigging, or fraud, as set forth in sub-paragraphs (1) through (6) above.

In the case of bribery or attempting to bribe, a business entity may not be awarded a contract if an official, agent or employee of such business entity committed the Prohibited Act on behalf of the business entity and pursuant to the direction or authorization of an officer, director or other responsible official of the business entity, and such Prohibited Act occurred within three years prior to the award of the contract. In addition, a business entity shall be disqualified if an owner, partner or shareholder controlling, directly or indirectly, 20% or more of the business entity, or an officer of the business entity has performed any Prohibited Act within five years prior to the award of the Contract.

THE APPLICANT HEREBY CERTIFIES THAT: The Applicant has read the provisions of Section A, Persons and Entities Subject to Disqualification, that the Applicant has not committed any Prohibited Act set forth in Section A, and that award of the Contract to the Applicant would not violate the provisions of such Section or of the Code.

B. BID-RIGGING OR BID ROTATING

THE APPLICANT HEREBY CERTIFIES THAT: *In accordance with 720 ILCS 5/33 E-11, neither the Applicant nor any Affiliated Entity is barred from award of this Contract as a result of a conviction for the violation of State laws prohibiting bid-rigging or bid rotating.*

C. DRUG FREE WORKPLACE ACT

THE APPLICANT HEREBY CERTIFIES THAT: The Applicant will provide a drug free workplace, as required by (30 ILCS 580/3).

D. **DELINQUENCY IN PAYMENT OF TAXES**

THE APPLICANT HEREBY CERTIFIES THAT: *The Applicant is not an owner or a party responsible for the payment of any tax or fee administered by Cook County, by a local municipality, or by the Illinois Department of Revenue, which such tax or fee is delinquent, such as bar award of a contract or subcontract pursuant to the Code, Chapter 34, Section 34-171.*

E. **HUMAN RIGHTS ORDINANCE**

No person who is a party to a contract with Cook County ("County") shall engage in unlawful discrimination or sexual harassment against any individual in the terms or conditions of employment, credit, public accommodations, housing, or provision of County facilities, services or programs (Code Chapter 42, Section 42-30 *et seq.*).

F. **ILLINOIS HUMAN RIGHTS ACT**

THE APPLICANT HEREBY CERTIFIES THAT: *It is in compliance with the Illinois Human Rights Act (775 ILCS 5/2-105), and agrees to abide by the requirements of the Act as part of its contractual obligations.*

G. **INSPECTOR GENERAL (COOK COUNTY CODE, CHAPTER 34, SECTION 34-174 and Section 34-250)**

The Applicant has not willfully failed to cooperate in an investigation by the Cook County Independent Inspector General or to report to the Independent Inspector General any and all information concerning conduct which they know to involve corruption, or other criminal activity, by another county employee or official, which concerns his or her office of employment or County related transaction.

The Applicant has reported directly and without any undue delay any suspected or known fraudulent activity in the County's Procurement process to the Office of the Cook County Inspector General.

H. **CAMPAIGN CONTRIBUTIONS (COOK COUNTY CODE, CHAPTER 2, SECTION 2-585)**

THE APPLICANT CERTIFIES THAT: It has read and shall comply with the Cook County's Ordinance concerning campaign contributions, which is codified at Chapter 2, Division 2, Subdivision II, Section 585, and can be read in its entirety at www.municode.com.

I. **GIFT BAN, (COOK COUNTY CODE, CHAPTER 2, SECTION 2-574)**

THE APPLICANT CERTIFIES THAT: It has read and shall comply with the Cook County's Ordinance concerning receiving and soliciting gifts and favors, which is codified at Chapter 2, Division 2, Subdivision II, Section 574, and can be read in its entirety at www.municode.com.

J. **LIVING WAGE ORDINANCE PREFERENCE (COOK COUNTY CODE, CHAPTER 34, SECTION 34-160;**

Unless expressly waived by the Cook County Board of Commissioners, the Code requires that a living wage must be paid to individuals employed by a Contractor which has a County Contract and by all subcontractors of such Contractor under a County Contract, throughout the duration of such County Contract. The amount of such living wage is annually by the Chief Financial Officer of the County, and shall be posted on the Chief Procurement Officer's website.

The term "Contract" as used in Section 4, I, of this EDS, specifically excludes contracts with the following:

1) Not-For Profit Organizations (defined as a corporation having tax exempt status under Section 501(C)(3) of the United State Internal Revenue Code and recognized under the Illinois State not-for -profit law);

2) Community Development Block Grants;

3) Cook County Works Department;

4) Sheriff's Work Alternative Program; and

5) Department of Correction inmates.

Section 7: REQUIRED DISCLOSURES

1. DISCLOSURE OF LOBBYIST CONTACTS

List all persons that have made lobbying contacts on your behalf with respect to this contract:

Name Address

None

2. LOCAL BUSINESS PREFERENCE STATEMENT (CODE, CHAPTER 34, SECTION 34-230)

Local business means a Person, including a foreign corporation authorized to transact business in Illinois, having a bona fide establishment located within the County at which it is transacting business on the date when a Bid is submitted to the County, and which employs the majority of its regular, full-time work force within the County. A Joint Venture shall constitute a Local Business if one or more Persons that qualify as a "Local Business" hold interests totaling over 50 percent in the Joint Venture, even if the Joint Venture does not, at the time of the Bid submittal, have such a bona fide establishment within the County.

a) Is Applicant a "Local Business" as defined above?

Yes: X No: _____

b) If yes, list business addresses within Cook County:

13769 Main Street, Lemont, Illinois 60439 (office)

16222 Western Avenue, Markham, Illinois 60426 (plant)

11835 South Central Park Avenue, Merrionette Park, Illinois 60803 (shop)

c) Does Applicant employ the majority of its regular full-time workforce within Cook County?

Yes: X No: _____

3. THE CHILD SUPPORT ENFORCEMENT ORDINANCE (CODE, CHAPTER 34, SECTION 34-172)

Every Applicant for a County Privilege shall be in full compliance with any child support order before such Applicant is entitled to receive or renew a County Privilege. When delinquent child support exists, the County shall not issue or renew any County Privilege, and may revoke any County Privilege.

All Applicants are required to review the Cook County Affidavit of Child Support Obligations attached to this EDS (EDS-5) and complete the Affidavit, based on the instructions in the Affidavit.

4. REAL ESTATE OWNERSHIP DISCLOSURES.

The Applicant must indicate by checking the appropriate provision below and providing all required information that either:

a) The following is a complete list of all real estate owned by the Applicant in Cook County:

PERMANENT INDEX NUMBER(S): SEE ATTACHED (NEXT PAGE)

(ATTACH SHEET IF NECESSARY TO LIST ADDITIONAL INDEX NUMBERS)

OR:

b) _____The Applicant owns no real estate in Cook County.

5. EXCEPTIONS TO CERTIFICATIONS OR DISCLOSURES.

If the Applicant is unable to certify to any of the Certifications or any other statements contained in this EDS and not explained elsewhere in this EDS, the Applicant must explain below:

If the letters, "NA", the word "None" or "No Response" appears above, or if the space is left blank, it will be conclusively presumed that the Applicant certified to all Certifications and other statements contained in this EDS.

Address	PIN
13769 Main St. Lemont, IL	22-15-200-003-0000
13769 Main St. Lemont, IL	22-15-200-015-0000
13751 Main St, Lemont, IL	22-15-200-016-0000
12256 S. Cottage Grove, Chicago, IL	25-27-200-007-0000

Section 7: COOK COUNTY DISCLOSURE OF OWNERSHIP INTEREST STATEMENT

The Cook County Code of Ordinances (§2-610 *et seq.*) requires that any Applicant for any County Action must disclose information concerning ownership interests in the Applicant. This Disclosure of Ownership Interest Statement must be completed with all information current as of the date this Statement is signed. Furthermore, this Statement must be kept current, by filing an amended Statement, until such time as the County Board or County Agency shall take action on the application. The information contained in this Statement will be maintained in a database and made available for public viewing.

If you are asked to list names, but there are no applicable names to list, you must state NONE. An incomplete Statement will be returned and any action regarding this contract will be delayed. A failure to fully comply with the ordinance may result in the action taken by the County Board or County Agency being voided.

"*Applicant*" means any Entity or person making an application to the County for any County Action.

"County Action" means any action by a County Agency, a County Department, or the County Board regarding an ordinance or ordinance amendment, a County Board approval, or other County agency approval, with respect to contracts, leases, or sale or purchase of real estate.

"Person" "Entity" or *"Legal Entity"* means a sole proprietorship, corporation, partnership, association, business trust, estate, two or more persons having a joint or common interest, trustee of a land trust, other commercial or legal entity or any beneficiary or beneficiaries thereof.

This Disclosure of Ownership Interest Statement must be submitted by :

1. An Applicant for County Action and

2. A Person that holds stock or a beneficial interest in the Applicant and is listed on the Applicant's Statement (a "Holder") must file a Statement and complete #1 only under **Ownership Interest Declaration**.

Please print or type responses clearly and legibly. Add additional pages if needed, being careful to identify each portion of the form to which each additional page refers.

This Statement is being made by the [X] Applicant or [ ] Stock/Beneficial Interest Holder

This Statement is an: [X] Original Statement or [ ] Amended Statement

Identifying Information:

Name Robert G. Krug

D/B/A: K-Five Construction Corporation FEIN NO/SSN (LAST FOUR DIGITS): 2161

Street Address: 13769 Main Street

City: Lemont State: Illinois Zip Code: 60439

Phone No.: (630) 257-5600 Fax Number: (630) 257-6788 Email: brianj@k-five.net

Cook County Business Registration Number: 012650
(Sole Proprietor, Joint Venture Partnership)

Corporate File Number (if applicable): D-5113-8449

Form of Legal Entity:

[ ] Sole Proprietor [ ] Partnership [X] Corporation [ ] Trustee of Land Trust

[ ] Business Trust [ ] Estate [ ] Association [ ] Joint Venture

[ ] Other (describe) _____

Ownership Interest Declaration:

1. List the name(s), address, and percent ownership of each Person having a legal or beneficial interest (including ownership) of more than five percent (5%) in the Applicant/Holder.

Name	Address	Percentage Interest in Applicant/Holder
George Krug, Jr.	13769 Main Street, Lemont	41.8%
Robert G. Krug	13769 Main Street, Lemont	4.1%
Robert W. Krug	13769 Main Street, Lemont	35.7%
Josephine M. Krug	13769 Main Street, Lemont	14.3%
Jennifer A. Krug	13769 Main Street, Lemont	4.1%

2. If the interest of any Person listed in (1) above is held as an agent or agents, or a nominee or nominees, list the name and address of the principal on whose behalf the interest is held.

Name of Agent/Nominee	Name of Principal	Principal's Address

3. Is the Applicant constructively controlled by another person or Legal Entity? [ ] Yes [X] No

If yes, state the name, address and percentage of beneficial interest of such person, and the relationship under which such control is being or may be exercised.

Name	Address	Percentage of Beneficial Interest	Relationship

Corporate Officers, Members and Partners Information:

For all corporations, list the names, addresses, and terms for all corporate officers. For all limited liability companies, list the names, addresses for all members. For all partnerships and joint ventures, list the names, addresses, for each partner or joint venture.

Name	Address	Title (specify title of Office, or whether manager or partner/joint venture)	Term of Office
George Krug, Jr.,	13769 Main Street, Lemont	CEO	
Robert G. Krug,	13769 Main Street, Lemont	President	
Robert W. Krug,	13769 Main Street, Lemont	Secretary	
Josephine M. Krug,	13769 Main Street, Lemont	Treasurer	
Jennifer A. Krug,	13769 Main Street, Lemont	Vice President	

Declaration (check the applicable box):

[X] I state under oath that the Applicant has withheld no disclosure as to ownership interest in the Applicant nor reserved any information, data or plan as to the intended use or purpose for which the Applicant seeks County Board or other County Agency action.

[X] I state under oath that the Holder has withheld no disclosure as to ownership interest nor reserved any information required to be disclosed.

Robert G. Krug
Name of Authorized Applicant/Holder Representative (please print or type)

President
Title

Signature

August 14, 2015
Date

brianj@k-five.net
E-mail address

(630) 257-5600
Phone Number

Subscribed to and sworn before me
this 14th day of Aug, 2015

My commission expires:

Notary Public Signature

Notary Seal

OFFICIAL SEAL
SUZANNE HOLBROOK
Notary Public - State of Illinois
Commission Expires May 23, 2018

COOK COUNTY BOARD OF ETHICS
69 W. WASHINGTON STREET, SUITE 3040
CHICAGO, ILLINOIS 60602
312/603-4304 Office 312/603-9988 Fax

Section 7: FAMILIAL RELATIONSHIP DISCLOSURE PROVISION

Nepotism Disclosure Requirement:

Doing a significant amount of business with the County requires that you disclose to the Board of Ethics the existence of any familial relationships with any County employee or any person holding elective office in the State of Illinois, the County, or in any municipality within the County. The Ethics Ordinance defines a significant amount of business for the purpose of this disclosure requirement as more than $25,000 in aggregate County leases, contracts, purchases or sales in any calendar year.

If you are unsure of whether the business you do with the County or a County agency will cross this threshold, err on the side of caution by completing the attached familial disclosure form because, among other potential penalties, any person found guilty of failing to make a required disclosure or knowingly filing a false, misleading, or incomplete disclosure will be prohibited from doing any business with the County for a period of three years. The required disclosure should be filed with the Board of Ethics by January 1 of each calendar year in which you are doing business with the County and again with each bid/proposal/quotation to do business with Cook County. The Board of Ethics may assess a late filing fee of $100 per day after an initial 30-day grace period.

The person that is doing business with the County must disclose his or her familial relationships. If the person on the County lease or contract or purchasing from or selling to the County is a business entity, then the business entity must disclose the familial relationships of the individuals who are and, during the year prior to doing business with the County, were:

- its board of directors,
- its officers,
- its employees or independent contractors responsible for the general administration of the entity,
- its agents authorized to execute documents on behalf of the entity, and
- its employees who directly engage or engaged in doing work with the County on behalf of the entity.

Do not hesitate to contact the Board of Ethics at (312) 603-4304 for assistance in determining the scope of any required familial relationship disclosure.

Additional Definitions:

"*Familial relationship*" means a person who is a spouse, domestic partner or civil union partner of a County employee or State, County or municipal official, or any person who is related to such an employee or official, whether by blood, marriage or adoption, as a:

☐ Parent	☐ Grandparent	☐ Stepfather
☐ Child	☐ Grandchild	☐ Stepmother
☐ Brother	☐ Father-in-law	☐ Stepson
☐ Sister	☐ Mother-in-law	☐ Stepdaughter
☐ Aunt	☐ Son-in-law	☐ Stepbrother
☐ Uncle	☐ Daughter-in-law	☐ Stepsister
☐ Niece	☐ Brother-in-law	☐ Half-brother
☐ Nephew	☐ Sister-in-law	☐ Half-sister

Section 7: COOK COUNTY BOARD OF ETHICS FAMILIAL RELATIONSHIP DISCLOSURE FORM

A. PERSON DOING OR SEEKING TO DO BUSINESS WITH THE COUNTY

Name of Person Doing Business with the County: K-FIVE CONSTRUCTION

Address of Person Doing Business with the County: 13769 MAIN STREET, LEMONT IL 60439

Phone number of Person Doing Business with the County: (630) 257-5600

Email address of Person Doing Business with the County: BRIANJ@K-FIVE.NET

If Person Doing Business with the County is a Business Entity, provide the name, title and contact information for the individual completing this disclosure on behalf of the Person Doing Business with the County:
BRIAN JOHNSSON, ESTIMATOR, 312-446-0857, BRIANJ@K-FIVE.NET

B. DESCRIPTION OF BUSINESS WITH THE COUNTY

Append additional pages as needed and for each County lease, contract, purchase or sale sought and/or obtained during the calendar year of this disclosure (or the proceeding calendar year if disclosure is made on January 1), identify:

The lease number, contract number, purchase order number, request for proposal number and/or request for qualification number associated with the business you are doing or seeking to do with the County:
1523-14815

The aggregate dollar value of the business you are doing or seeking to do with the County: $ 4,373,000.00

The name, title and contact information for the County official(s) or employee(s) involved in negotiating the business you are doing or seeking to do with the County: SEE BELOW

The name, title and contact information for the County official(s) or employee(s) involved in managing the business you are doing or seeking to do with the County: EDMUND RENDON 312-603-6824

C. DISCLOSURE OF FAMILIAL RELATIONSHIPS WITH COUNTY EMPLOYEES OR STATE, COUNTY OR MUNICIPAL ELECTED OFFICIALS

Check the box that applies and provide related information where needed

☐ The Person Doing Business with the County **is an individual** and there is **no familial relationship** between this individual and any Cook County employee or any person holding elective office in the State of Illinois, Cook County, or any municipality within Cook County.

☑ The Person Doing Business with the County **is a business entity** and there is **no familial relationship** between any member of this business entity's board of directors, officers, persons responsible for general administration of the business entity, agents authorized to execute documents on behalf of the business entity or employees directly engaged in contractual work with the County on behalf of the business entity, and any Cook County employee or any person holding elective office in the State of Illinois, Cook County, or any municipality within Cook County.

Section 7: COOK COUNTY BOARD OF ETHICS FAMILIAL RELATIONSHIP DISCLOSURE FORM

☐ The Person Doing Business with the County **is an individual** and **there is a familial relationship** between this individual and at least one Cook County employee and/or a person or persons holding elective office in the State of Illinois, Cook County, and/or any municipality within Cook County. **The familial relationships are as follows:**

Name of Individual Doing Business with the County	Name of Related County Employee or State, County or Municipal Elected Official	Title and Position of Related County Employee or State, County or Municipal Elected Official	Nature of Familial Relationship*

If more space is needed, attach an additional sheet following the above format.

☐ The Person Doing Business with the County **is a business entity** and **there is a familial relationship** between at least one member of this business entity's board of directors, officers, persons responsible for general administration of the business entity, agents authorized to execute documents on behalf of the business entity and/or employees directly engaged in contractual work with the County on behalf of the business entity, on the one hand, and at least one Cook County employee and/or a person holding elective office in the State of Illinois, Cook County, and/or any municipality within Cook County, on the other. **The familial relationships are as follows:**

Name of Member of Board of Director for Business Entity Doing Business with the County	Name of Related County Employee or State, County or Municipal Elected Official	Title and Position of Related County Employee or State, County or Municipal Elected Official	Nature of Familial Relationship*

Name of Officer for Business Entity Doing Business with the County	Name of Related County Employee or State, County or Municipal Elected Official	Title and Position of Related County Employee or State, County or Municipal Elected Official	Nature of Familial Relationship*

Name of Person Responsible for the General Administration of the Business Entity Doing Business with the County	Name of Related County Employee or State, County or Municipal Elected Official	Title and Position of Related County Employee or State, County or Municipal Elected Official	Nature of Familial Relationship*

Name of Agent Authorized to Execute Documents for Business Entity Doing Business with the County	Name of Related County Employee or State, County or Municipal Elected Official	Title and Position of Related County Employee or State, County or Municipal Elected Official	Nature of Familial Relationship*

Name of Employee of Business Entity Directly Engaged in Doing Business with the County	Name of Related County Employee or State, County or Municipal Elected Official	Title and Position of Related County Employee or State, County or Municipal Elected Official	Nature of Familial Relationship*

If more space is needed, attach an additional sheet following the above format.

VERIFICATION: To the best of my knowledge, the information I have provided on this disclosure form is accurate and complete. I acknowledge that an inaccurate or incomplete disclosure is punishable by law, including but not limited to fines and debarment.

Signature of Recipient

8/14/15
Date

SUBMIT COMPLETED FORM TO: Cook County Board of Ethics
69 West Washington Street, Suite 3040, Chicago, Illinois 60602
Office (312) 603-4304 – Fax (312) 603-9988
CookCounty.Ethics@cookcountyil.gov

* Spouse, domestic partner, civil union partner or parent, child, sibling, aunt, uncle, niece, nephew, grandparent or grandchild by blood, marriage (*i.e.* in laws and step relations) or adoption.

Section 8: CONTRACT AND EDS EXECUTION PAGE

PLEASE EXECUTE THREE ORIGINALS

The Applicant hereby certifies and warrants: that all of the statements, certifications and representations set forth in this EDS are true, complete and correct; that the Applicant is in full compliance and will continue to be in compliance throughout the term of the Contract or County Privilege issued to the Applicant with all the policies and requirements set forth in this EDS; and that all facts and information provided by the Applicant in this EDS are true, complete and correct. The Applicant agrees to inform the Chief Procurement Officer in writing if any of such statements, certifications, representations, facts or information becomes or is found to be untrue, incomplete or incorrect during the term of the Contract or County Privilege.

Execution by Corporation

Robert G. Krug
President's Name

President's Signature

(630) 257-5600
Telephone

brianj@k-five.net (estimator)
Email

Secretary Signature
Robert W. Krug

August 14, 2015
Date

Execution by LLC

Member/Manager (Signature)*

Date

Telephone

Email

Execution by Partnership/Joint Venture

Partner/Joint Venturer (Signature)*

Date

Telephone

Email

Execution by Sole Proprietorship

Signature

Date

Telephone

Email

Subscribed and sworn to before me this
14th day of August, 20 15.

My commission expires:

OFFICIAL SEAL
SUZANNE HOLBROOK
Notary Public - State of Illinois
My Commission Expires May 23, 2018

Notary Public Signature

Notary Seal

If the operating agreement, partnership agreement or governing documents requiring execution by multiple members, managers, partners, or joint venturers, please complete and execute additional Contract and EDS Execution Pages.

SECTION 5
COOK COUNTY SIGNATURE PAGE

ON BEHALF OF THE COUNTY OF COOK, A BODY POLITIC AND CORPORATE OF THE STATE OF ILLINOIS, THIS CONTRACT IS HEREBY EXECUTED BY:

Sam E. M

COOK COUNTY CHIEF PROCUREMENT OFFICER

DATED AT CHICAGO, ILLINOIS THIS 2 DAY OF November ,20 15.

IN THE CASE OF A BID/ PROPOSAL/RESPONSE, THE COUNTY HEREBY ACCEPTS:

THE FOREGOING BID/PROPOSAL/RESPONSE AS IDENTIFIED IN THE CONTRACT DOCUMENTS FOR CONTRACT NUMBER

1523-14815

APPROVED BY BOARD OF
COOK COUNTY COMMISSIONERS

OCT 28 2015

OR

ITEM(S), SECTION(S), PART(S): 14-PPRPS-01-PV

TOTAL AMOUNT OF CONTRACT: $ 4,373,000.00

(DOLLARS AND CENTS)

FUND CHARGEABLE:

APPROVED AS TO FORM:

ASSISTANT STATE'S ATTORNEY
(Required on contracts over $1,000,000.00)

Insert

IDOT Certificate of Eligibility

Section 9

Illinois Department of Transportation

Certificate of Eligibility

Contractor No 3069

K-Five Construction Corporation
13769 Main Street Lemont, IL 60439

WHO HAS FILED WITH THE DEPARTMENT AN APPLICATION FOR PREQUALIFICATION STATEMENT OF EXPERIENCE, EQUIPMENT AND FINANCIAL CONDITION IS HEREBY QUALIFIED TO BID AT ANY OF DEPARTMENT OF TRANSPORTATION LETTINGS IN THE CLASSES OF WORK AND WITHIN THE AMOUNT AND OTHER LIMITATIONS OF EACH CLASSIFICATION, AS LISTED BELOW, FOR SUCH PERIOD AS THE UNCOMPLETED WORK FROM ALL SOURCES DOES NOT EXCEED SUPER UNLIMITED

001	EARTHWORK	$9,525,000
002	PCC PAVING	$35,750,000
003	HMA PLANT MIX	Unlimited
017	CONCRETE CONSTRUCTION	$32,475,000
031	PAVT. TEXTUR. & SURF. REM.	$1,275,000
032	COLD MILL,PLAN. & ROTOMILL	$8,600,000
08A	AGGREGATE BASES & SURF. (A)	$11,650,000

THIS CERTIFICATE OF ELIGIBILITY IS VALID FROM 6/18/2015 TO 6/30/2016 INCLUSIVE, AND SUPERSEDES ANY CERTIFICATE PREVIOUSLY ISSUED, BUT IS SUBJECT TO REVISION OR REVOCATION, IF AND WHEN CHANGES IN THE FINANCIAL CONDITION OF THE CONTRACTING FIRM OR OTHER FACTS JUSTIFY SUCH REVISIONS OR REVOCATION.
ISSUED AT SPRINGFIELD, ILLINOIS ON 6/18/2015.

Tim Kell

Interim Engineer of Construction

IL 494-0645

Insert

IDOT Certificate of Availability

Section 10

K-FIVE Construction Corporation

• 13769 Main Street Lemont, Illinois 60439

Phone 630-257-5600
Fax 630-257-6788

August 13th, 2015

Local Municipality/City Engineer

RE: "Affidavit of Availability"

Gentlemen:

Per the attached "Rules for Prequalification of Contractors and Issuance of Plans and Proposals" as supplied by Illinois Department of Transportation Section 650.310 item'd' K-Five Construction Corporation hereby requests to forego the filing of an "Affidavit of Availability" based upon the "Unlimited" financial rating (d2) and bituminous and PCC paving rating (d2) as shown on the attached "Certificate of Eligibility".

This method of substitution for the "Affidavit of Availability" has been approved by IDOT's prequalification engineer and has been accepted by IDOT for contract lettings for IDOT. The prequalification engineer at IDOT (Springfield) is Mike Renner. If there are any questions he can be reached at (217) 782-3413.

Sincerely,
K-Five Construction Corporation

Joseph M. Bodzioch, PE
Chief Estimator

Illinois Department of Transportation

RULES FOR

PREQUALIFICATION OF CONTRACTORS

AND

ISSUANCE OF PLANS AND PROPOSALS

44 IL. ADM.CODE SEC. 650

ADOPTED JULY 2, 1994

AMENDED DECEMBER 7, 2000

e) An applicant's capacity to perform may exceed the calculated equipment factor. This can occur by good management, efficiency and additional hours of work. When this occurs, the primary and advanced formulas will be replaced by the secondary formula.

f) The work rating in any given category may not exceed the financial rating of the applicant.

g) A work rating may be designated as "Illinois Work Only." This work rating indicates the dollar value of work which the applicant's own forces can perform within the State of Illinois in one construction season. This rating will be established by the Department if the applicant does work in more than one state or outside the continental United States and it would be impractical to verify all outstanding work.

h) Prior to any consideration for establishing a work rating value, the applicant shall provide a list of all technical, supervisory and key personnel who would manage a project awarded by the Department. This list should include the individual's job title and number of years of construction experience. The Department may also require the submittal of resumes of the above individuals. Applicants prequalifying with the Department for the first time shall be required to submit resumes. Insufficient personnel may be justification for a reduction in the rating of a work category as determined by the primary, advanced or secondary formula. Hiring of additional personnel may be justification for an increase in the rating of a work category. Applicants without experienced personnel for a requested work category may be denied the rating.

i) Methods to Improve a Work Rating

1) Hiring of additional personnel.
2) Purchase, lease or rental of additional equipment.
3) Completion of additional work.

j) A contractor may request additional rating in a work category at any time during the prequalification period by submitting a revised application or supplemental information.

Section 650.290 Advertising for Bids

The procedures for procuring contracts are set out in the Department's rules for contract procurement found at 44 Ill. Adm. Code 660. The procedures of this Subpart B govern the granting of authority to bid on contracts advertised for bids in the Transportation Bulletin in accordance with the Department's rules for contract procurement.

Section 650.300 Request for Proposal Forms and Plans; Authorization to Bid

A Request for Proposal Forms and Plans and Request for Authorization to Bid (Form BD-124) is published with the Transportation Bulletin. The FormBD-124 shall be used by contractors to request proposals and plans and to request formal authorization to bid on contracts advertised in the Transportation Bulletin. Anyone may obtain proposal forms and plans regardless of prequalification status. An Authorization to Bid must be granted in accordance with this Part before a prequalified contractor may submit a bid.

Section 650.310 Affidavit of Availability

a) An Affidavit of Availability (Form BC-57) is attached to theTransportation Bulletin and must be submitted with a request for Authorizations to Bid. It is a swom statement concerning the contractor's present and pending contract commitments. The contractor shall not omit or misrepresent its work outstanding. When the contractor has uncompleted or pending work as a party of a joint venture, the contractor's responsible portion of the work shall be shown. The affidavit shall be signed by an officer or

director of a corporate contractor, and otherwise, an owner shall sign. The affidavit is not required when Authorization to Bid is not being requested. The affidavit shall include:

1) The amount of all uncompleted work, by type, either as a principal or subcontractor together with the name of the agency under whose jurisdiction the work is being performed. All uncompleted work shall be based upon the engineer's or owners most recent estimate.

2) The commitment of equipment and personnel on a payroll or rental basis even though no formal contract exists.

3) All work on which the contractor is the low bidder and which has not yet been awarded.

4) A listing of all subcontractors and the value of work sublet.

b) Prospective bidders shall notify the Department within two working days of any low bids pending award or contracts awarded after submission of the affidavit.

c) Facsimiles of the affidavit will be accepted for analysis purposes. Authorization to Bid will not be issued without a correct, signed and notarized original affidavit in the Department's Central Bureau of Construction's possession by the cut-off date specified in the Transportation Bulletin.

d) A contractor may request to forego filing an affidavit if it has a financial rating at either of the following levels. The Prequalification Section will grant such a request provided the contractor's existing contracts with the Department are not behind approved contract progress schedules and provided the most recent performance evaluation rating is not less than 6.0 in the performance factor calculation. (See Section 650.240 of this Part.)

1) A financial rating of $300 million.

2) A financial rating of at least $150 million or a Department calculated net worth of at least $40 million, either in conjunction with two or more work ratings calculated to equal or exceed $50 million each.

Section 650.315 Disclosure of Other Procurement Relationships

a) Section 50-35(h) of the Illinois Procurement Code [30 ILCS 500/50-35(h)] requires that all bids of more than $10,000 be accompanied by disclosure of all current or pending contracts, proposals, leases, or other ongoing procurement relationships the contractor has with any other unit of State government. This disclosure is required in addition to the financial interest disclosure provided at Section 650.80(d) of this Part.

b) The Department provides the form for making the required disclosure of other procurement relationships with the Invitation for Bids in the Transportation Bulletin.

c) Contractors submitting an Affidavit of Availability with a request for Authorization to Bid may incorporate by reference on this disclosure form the contents of the Affidavit of Availability that are responsive to the disclosure requirement. Procurement relationships that are not included in the Affidavit of Availability shall be disclosed on the form. Contractors not required to submit an Affidavit of Availability as provided in Section 650.310(a) of this Part shall make the required disclosures on the disclosure form.

Section 11: CONTRACTOR'S CERTIFICATION CONCERNING LABOR STANDARDS AND PREVAILING WAGE REUIREMENTS

To Contractor:

Date: August 14, 2015
Project Number: 1523-14815
Project Name Pavement Preservation and Rehabilitation Program 2015 - South Rebid

1. The undersigned, having executed a contract with the County of Cook for the construction of the above identified project, acknowledges that:

   (a) The Labor Standards provisions of the Contract for Construction are included in the aforesaid contract.

   (b) Correction of any infractions of the aforesaid conditions, including infractions by any of his Subcontractors and any lower tier subcontractors, is his responsibility.

2. He certifies that:

   (b) Neither he nor any firm, corporation, partnership or association in which he has a substantial interest is designated as an ineligible contractor by the Comptroller General of the United States pursuant to Section 5.6(b) of the Regulations of the Secretary of Labor, Part 5 (29CFR Part 5) or pursuant to the Section 3(a) of the Davis-Bacon Act, as amended [40 U.S.C. 276a-2(a)]

   (c) No part of the aforementioned Contract has been or will be subcontracted to any Subcontractor if such Subcontractor or any firm, corporation, partnership or association in which such Subcontractor has a substantial interest is designated as an ineligible Contractor pursuant to any of the aforementioned regulatory or statutory provisions.

3. He agrees to obtain and forward to the aforementioned recipient within ten days after the execution of any subcontract, including those executed by his Subcontractor any lower tier subcontractor, a Subcontractor's Certification Concerning Labor Standards and Prevailing Wages Requirements executed by the Subcontractors.

4. **He certifies that:**

   (a) The legal name and the business address of the undersigned are: K-Five Construction Corp 13769 MAIN ST. LEMONT, I

   (b) The undersigned is (check one):
   - ____ Sole Proprietorship
   - ____ Partnership
   - X Corporation
   - ____ Other Organization (Describe)

   (c) The name, title and address of the owner, partners or officers of the undersigned are:

NAME	TITLE	ADDRESS
George Krug, Jr.	CEO	13769 Main Street, Lemont
Robert G. Krug	President	13769 Main Street, Lemont
Robert W. Krug	Secretary	13769 Main Street, Lemont

Josephine M. Krug	Treasurer	13769 Main Street, Lemont
Jennifer A. Krug-McNaughton	Vice President	13769 Main Street, Lemont
Mark Sniegowski	CFO-Vice President	13769 Main Street, Lemont
Rick Sniegowski	Vice President	13769 Main Street, Lemont

(d) The name and address of all other persons, both natural and corporate, having a substantial interest in the undersigned, and the nature of the interest are (if none, so state):

NAME	ADDRESS	NATURE OF INTEREST
George Krug, Jr.	13769 Main Street, Lemont	41.8%
Robert G. Krug	13769 Main Street, Lemont	4.1%
Robert W. Krug	13769 Main Street, Lemont	35.7%
Josephine M. Krug	13769 Main Street, Lemont	14.3%
Jennifer Krug-McNaughton	13769 Main Street, Lemont	4.1%

(e) The names and addresses and trade classifications of all other building construction contractors in which the undersigned has a substantial interest is (if none, so state):

NAME	ADDRESS	TRADE CLASSIFICATION

Robert G. Krug, President
CONTRACTOR K-Five Construction Corp.

DATE August 14, 2015

X
SIGNATURE

Section 11: SUBCONTRACTOR'S CERTIFICATION CONCERNING LABOR STANDARDS AND PREVAILING WAGE REQUIREMENTS

To Contractor:

Date:_____
Project Number:_____
Project Name_____

1. The undersigned, having executed a contract with_____
(Contractor)
_____ for_____
Nature of Work)
_____ in the amount of $_____ in the construction of the above-identified project, certifies that:

   (a) The Labor Standards provisions of the Contract for Construction are included in the aforesaid contract.

   (b) Neither he nor any firm, corporation, partnership or association in which he has a substantial interest is designated as an ineligible contractor by the Comptroller General of the United States pursuant to Section 5.6(b) of the Regulations of the Secretary of Labor, Part 5 (29CFR Part 5) or pursuant to the Section 3(a) of the Davis-Bacon Act, as amended [40 U.S.C. 276a-2(a)]

   (c) No part of the aforementioned Contract has been or will be subcontracted to any Subcontractor if such Subcontractor or any firm, corporation, partnership or association in which such Subcontractor has a substantial interest is designated as an ineligible Contractor pursuant to any of the aforementioned regulatory or statutory provisions.

2. He agrees to obtain and forward to the aforementioned recipient within ten days after the execution of any subcontract, including those executed by his Subcontractor any lower tier subcontractor, a Subcontractor's Certification Concerning Labor Standards and Prevailing Wages Requirements executed by the Subcontractors.

3. The workmen will report for duty on _____
(Date)

4. He certifies that:

   (a) The legal name and the business address of the undersigned are:

   (b) The undersigned is (check one):
   ____ Sole Proprietorship
   ____ Partnership
   ____ Corporation
   ____ Other Organization (Describe)

   (c) The name and address of the owner, partners or officers of the undersigned are:

NAME	TITLE	ADDRESS

SUBCONTRACTOR SIGNATURE: _____ DATE: _____

Section 11: SUBCONTRACTOR'S CERTIFICATION CONCERNING LABOR STANDARDS AND PREVAILING WAGE REQUIREMENTS

To Contractor:

Date: August 13, 2015
Project Number: 1523-14815
Project Name: PARK PLACE + REHAB SOUTH ROBIO

1. The undersigned, having executed a contract with K-FIVE CONSTRUCTION CORP. (Contractor) for SEE Attached SCOPE (Work) in the amount of $253,000.00 for the construction of the above identified project, certifies that:

(a) The Labor Standards provisions of the Contract for Construction are included in the aforesaid contract.

(b) Neither he nor any firm, corporation, partnership or association in which he has a substantial interest is designated as an ineligible contractor by the Comptroller General of the United States pursuant to Section 5.6(b) of the Regulations of the Secretary of Labor, Part 5 (29 CFR Part 5) or pursuant to the Section 3(a) of the Davis-Bacon Act, as amended (40 U.S.C. 276a-2(a)).

(c) No part of the aforementioned Contract has been or will be subcontracted to any Subcontractor, such Subcontractor or any firm, corporation, partnership or association in which such Subcontractor has a substantial interest is designated as an ineligible Contractor pursuant to any of the aforementioned regulatory or statutory provisions.

2. He agrees to obtain and forward to the aforementioned recipient within ten days after the execution of any subcontract, including those executed by his Subcontractor any lower tier subcontractor, a Subcontractor's Certification Concerning Labor Standards and Prevailing Wages Requirements executed by the Subcontractors.

3. The workmen will report for duty on 10 DAYS After AWARD (Date).

4. He certifies that:

(a) The legal name and the business address of the undersigned are:

(b) The undersigned is (check one):
- X Sole Proprietorship
- ___ Partnership
- ___ Corporation
- ___ Other Organization (Describe)

(c) The name and address of the owner, partners or officers of the undersigned are:

NAME	TITLE	ADDRESS
Gem Construction		
348 WOODLANE CT		
WOODDALE IL 60191		

8/13/15
DATE

John Bonardi / President
SUBCONTRACTOR SIGNATURE

MBE/WBE UTILIZATION PLAN - FORM 1

BIDDER/PROPOSER HEREBY STATES that all MBE/WBE firms included in this Plan are certified MBEs/WBEs by at least one of the entities listed in the General Conditions – Section 19.

I. **BIDDER/PROPOSER MBE/WBE STATUS:** (check the appropriate line)

- [✓] Bidder/Proposer is a certified MBE or WBE firm. (If so, attach copy of current Letter of Certification)
- [ ] Bidder/Proposer is a Joint Venture and one or more Joint Venture partners are certified MBEs or WBEs. (If so, attach copies of Letter(s) of Certification, a copy of Joint Venture Agreement clearly describing the role of the MBE/WBE firm(s) and its ownership interest in the Joint Venture and a completed Joint Venture Affidavit – available online at :/www.cookcountyil.gov/contractcompliance)
- [ ] Bidder/Proposer is not a certified MBE or WBE firm, nor a Joint Venture with MBE/WBE partners, but will utilize MBE and WBE firms either directly or indirectly in the performance of the Contract. (If so, complete Sections II below and the Letter(s) of Intent – Form 2).

II. [x] **Direct Participation of MBE/WBE Firms** [ ] **Indirect Participation of MBE/WBE Firms**

NOTE: Where goals have not been achieved through direct participation, Bidder/Proposer shall include documentation outlining efforts to achieve Direct Participation at the time of Bid/Proposal submission. Indirect Participation will only be considered after all efforts to achieve Direct Participation have been exhausted. Only after written documentation of Good Faith Efforts is received will Indirect Participation be considered.

MBEs/WBEs that will perform as subcontractors/suppliers/consultants include the following:

MBE/WBE Firm: Gem Construction

Address: 348 Woodlane Ct WoodDale IL 60191

E-mail: gemconstruinc@comcast.net

Contact Person: JoAnn Raimondi Phone: fax#1-630-620-7298

Dollar Amount Participation: $ 253,000

Percent Amount of Participation: 5.8% %

*Letter of intent attached? Yes X No _____
*Current Letter of Certification attached? Yes X No _____

MBE/WBE Firm: _____

Address: _____

E-mail: _____

Contact Person: _____ Phone: _____

Dollar Amount Participation: $ _____

Percent Amount of Participation: _____ %

*Letter of Intent attached? Yes _____ No _____
*Current Letter of Certification attached? Yes _____ No _____

Attach additional sheets as needed.

*** Letter(s) of Intent and current Letters of Certification must be submitted at the time of bid.**

Aug 13 15 05:30p Gem Construction 6306207298 p.5

Section 12: MBE/WBE LETTER OF INTENT - FORM 2

M/WBE Firm: Gem Construction
Certifying Agency: City of Chicago
Contact Person: John Raimondi / President
Certification Expiration Date: 4/1/18
Address: 348 E. Woodlawn ct
Ethnicity: WBE
City/State: Wooddale IL. Zip: 60191.
Bid/Proposal/Contract #: 1523-14815
Phone: -0- Fax: (630) 620-7298
FEIN #: 36-3812604
Email: gemconstructinc@comcast.net
Participation: [ ] Direct [ ] Indirect

Will the M/WBE firm be subcontracting any of the goods or services of this contract to another firm?

[X] No. [ ] Yes – Please attach explanation. Proposed Subcontractor(s): _____

The undersigned M/WBE is prepared to provide the following Commodities/Services for the above named Project/ Contract: (If more space is needed to fully describe M/WBE Firm's proposed scope of work and/or payment schedule, attach additional sheet(s).

SEE ATTACHED.

Indicate the Dollar Amount, Percentage, and the Terms of Payment for the above-described Commodities/ Services:

$253,000.00 (5.8)% PER CCHD Contract TERMS.

THE UNDERSIGNED PARTIES AGREE that this Letter of Intent will become a binding Subcontract Agreement for the above work, conditioned upon (1) the Bidder/Proposer's receipt of a signed contract from the County of Cook; (2) Undersigned Subcontractor remaining compliant with all relevant credentials, codes, ordinances and statutes required by Contractor, Cook County, and the State to participate as a MBE/WBE firm for the above work. The Undersigned Parties do also certify that they did not affix their signatures to this document until all areas under Description of Service/ Supply and Fee/Cost were completed.

Signature (M/WBE): John Raimondi
Print Name: JOANN RAimondi
Firm Name: Gem Construction
Date: 8/13/2015

Signature (Prime Bidder/Proposer): _____
Print Name: JOE BORTOCH
Firm Name: K-Five Construction Corp.
Date: 8/13/15

Subscribed and sworn before me
this 13TH day of August, 2015.
Notary Public: Rainelle M Burke
SEAL
OFFICIAL SEAL
RAINELLE M BURKE
Notary Public - State of Illinois
My Commission Expires Mar 30, 2018

Subscribed and sworn before me
this 13 day of Aug, 2015.
Notary Public: Suzanne Holbrook
SEAL
OFFICIAL SEAL
SUZANNE HOLBROOK
Notary Public - State of Illinois
My Commission Expires May 23, 2018

GEM CONSTRUCTION

Description	Quantity	UM	Unit Price	Total Price
65 - 65 - CLASS B PATCHES, TYPE I, 10" (PARTIAL)	65	SY	$92.00	$5,980.00
66 - 66 - CLASS B PATCHES, TYPE II, 10" (PARTIAL)	2425	SY	$92.00	$223,100.00
67 - 67 - CLASS B PATCHES, TYPE III, 10" (PARTIAL)	50	SY	$92.00	$4,600.00
68 - 68 - CLASS B PATCHES, TYPE IV, 10" (PARTIAL)	210	SY	$92.00	$19,320.00
			GRAND TOTAL	**$253,000.00**

DEPARTMENT OF PROCUREMENT SERVICES

CITY OF CHICAGO

DEC 16 2014

Jo Ann Raimondi
Gem Construction Co.
348 E. Woodlane Court
Wood Dale, IL 60191

Dear Jo Ann Raimondi:

We are pleased to inform you that **Gem Construction Co.** has been recertified as a **Women's Business Enterprise ("WBE")** by the City of Chicago ("City"). This **WBE** certification is valid until **4/1/2018**; however your firm's certification must be revalidated annually. In the past the City has provided you with an annual letter confirming your certification; such letters will no longer be issued. As a consequence, we require you to be even more diligent in filing your **annual No-Change Affidavit 60 days** before your annual anniversary date.

It is now your responsibility to check the City's certification directory and verify your certification status. As a condition of continued certification during the five year period stated above, you must file an annual No-Change Affidavit. Your firm's **annual No-Change Affidavit** is due by **4/1/2015, 4/1/2016, 4/1/2017.** Please remember, you have an affirmative duty to file your **No-Change Affidavit 60 days** prior to the date of expiration. Failure to file your annual No-Change Affidavit may result in the suspension or rescission of your certification.

Your firm's five year certification will expire on **4/1/2018.** You have an affirmative duty to file for recertification **60 days** prior to the date of the five year anniversary date. Therefore, you must file for recertification by **2/1/2018.**

It is important to note that you also have an ongoing affirmative duty to notify the City of any changes in ownership or control of your firm, or any other fact affecting your firm's eligibility for certification **within 10 days** of such change. These changes may include but are not limited to a change of address, change of business structure, change in ownership or ownership structure, change of business operations, gross receipts and or personal net worth that exceed the program threshold. Failure to provide the City with timely notice of such changes may result in the suspension or rescission of your certification. In addition, you may be liable for civil penalties under Chapter 1-22, "False Claims", of the Municipal Code of Chicago.

Please note – you shall be deemed to have had your certification lapse and will be ineligible to participate as a **WBE** if you fail to:

121 NORTH LASALLE STREET, ROOM 806, CHICAGO, ILLINOIS 60602

DEPARTMENT OF PROCUREMENT SERVICES

CITY OF CHICAGO

MAY 19 2015

Jo Ann Raimondi
Gem Construction Co.
348 E. Woodlane Court
Wood Dale, IL 60191

Dear Jo Ann Raimondi:

The City of Chicago has reviewed your annual *No Change Affidavit* and supporting documentation and is pleased to inform you that your firm **Gem Construction Co.** continues to meet the **Disadvantaged Business Enterprise ("DBE")** program certification eligibility standards set forth in 49 CFR Part 26. Your next No Change Affidavit is due **April 1, 2016**.

This certification allows your firm to participate as a **DBE** in the Illinois Unified Certification Program (IL UCP). The participating agencies include the Illinois Department of Transportation, the City of Chicago, the Chicago Transit Authority, Metra and Pace.

If there is any change in circumstances during the course of your certification period that affect your ability to meet size, disadvantaged status, ownership, or control requirements or any material change in the information provided in your initial application, you must provide written notification to this agency within **thirty (30) days** of the occurrence of the change. Failure to provide this information is a ground for denial of certification based on failure to cooperate pursuant to 49 CFR 26.109(c).

Your firm's name will appear in the IL UCP DBE Directory under the following category name(s):

NAICS Code(s)
238990- All Other Specialty Trade Contractors

The Directory is used by prime contractors/consultants, as well as other agencies, to solicit participation of DBE, and ACDBE firms. The Directory can be accessed on the Internet at http://www.idot.illinois.gov/doing-business/certifications/disadvantaged-business-enterprise-certification/il-ucp-directory/index.

Your participation on contracts will only be credited toward **DBE** contract goals when you perform in your firm's approved area(s) of specialty. Credit for participation in an area outside your specialty requires prior approval (verification of resources, expertise, and corresponding support documentation, etc.).

Sincerely,

Jamie L. Rhee
Chief Procurement Officer

JLR/fn

121 NORTH LASALLE STREET, ROOM 806, CHICAGO, ILLINOIS 60602

Section 11: SUBCONTRACTOR'S CERTIFICATION CONCERNING LABOR STANDARDS AND PREVAILING WAGE REQUIREMENTS

To Contractor:

Date: August 13, 2015
Project Number: 1523 - 14815
Project Name Paint Preservation - South

1. The undersigned, having executed a contract with K-Five Construction Corp. (Contractor) for Concrete and Sewer Repair (Nature of Work) in the amount of $1,202,408.42 in the construction of the above-identified project, certifies that:

   (a) The Labor Standards provisions of the Contract for Construction are included in the aforesaid contract.

   (b) Neither he nor any firm, corporation, partnership or association in which he has a substantial interest is designated as an ineligible contractor by the Comptroller General of the United States pursuant to Section 5.6(b) of the Regulations of the Secretary of Labor, Part 5 (29CFR Part 5) or pursuant to the Section 3(a) of the Davis-Bacon Act, as amended [40 U.S.C. 276a-2(a)]

   (c) No part of the aforementioned Contract has been or will be subcontracted to any Subcontractor if such Subcontractor or any firm, corporation, partnership or association in which such Subcontractor has a substantial interest is designated as an ineligible Contractor pursuant to any of the aforementioned regulatory or statutory provisions.

2. He agrees to obtain and forward to the aforementioned recipient within ten days after the execution of any subcontract, including those executed by his Subcontractor any lower tier subcontractor, a Subcontractor's Certification Concerning Labor Standards and Prevailing Wages Requirements executed by the Subcontractors.

3. The workmen will report for duty on T.B.D. (Date)

4. He certifies that:

   (a) The legal name and the business address of the undersigned are:

   (b) The undersigned is (check one):
   ____ Sole Proprietorship
   ____ Partnership
   X Corporation
   ____ Other Organization (Describe)

   (c) The name and address of the owner, partners or officers of the undersigned are:

NAME	TITLE	ADDRESS
Guillermina Diaz	President	5001 S Linder Chicago, IL
Tomas Rios	Vice-President	5708 W 6rd Pl Chicago, IL
Jose Zoto	Secretary	714 Hudson Ave Chicago, IL

August 13, 2015
DATE

SUBCONTRACTOR SIGNATURE

Section 12: MBE/WBE UTILIZATION PLAN - FORM 1

BIDDER/PROPOSER HEREBY STATES that all MBE/WBE firms included in this Plan are certified MBEs/WBEs by at least one of the entities listed in the General Conditions – Section 19.

I. **BIDDER/PROPOSER MBE/WBE STATUS:** (check the appropriate line)

X Bidder/Proposer is a certified MBE/WBE firm. (If so, attach copy of current Letter of Certification)

___ Bidder/Proposer is a Joint Venture and one or more Joint Venture partners are certified MBEs or WBEs. (If so, attach copies of Letter(s) of Certification, a copy of Joint Venture Agreement clearly describing the role of the MBE/WBE firm(s) and its ownership interest in the Joint Venture and a completed Joint Venture Affidavit – available online at www.cookcountyil.gov/contractcompliance)

___ Bidder/Proposer is not a certified MBE or WBE firm, nor a Joint Venture with MBE/WBE partners, but will utilize MBE and WBE firms either directly or indirectly in the performance of the Contract. (If so, complete Sections II below and the Letter(s) of Intent – Form 2).

II. [X] **Direct Participation of MBE/WBE Firms** [ ] **Indirect Participation of MBE/WBE Firms**

NOTE: Where goals have not been achieved through direct participation, Bidder/Proposer shall include documentation outlining efforts to achieve Direct Participation at the time of Bid/Proposal submission. Indirect Participation will only be considered after all efforts to achieve Direct Participation have been exhausted. Only after written documentation of Good Faith Efforts is received will Indirect Participation be considered.

MBEs/WBEs that will perform as subcontractors/suppliers/consultants include the following:

MBE/WBE Firm: **Dynamicx Enterprises, Inc.**

Address: **4751 S. Central Avenue**, Chicago IL 60638

E-mail: **dynamicx4751@comcast.net**

Contact Person: **Nicolas Diaz** Phone: **(708) 929-4551**

Dollar Amount Participation: $ 1,202,408.42

Percent Amount of Participation: 27.5%

*Letter of Intent attached? Yes X No ___
*Current Letter of Certification attached? Yes X No ___

MBE/WBE Firm: ___

Address: ___

E-mail: ___

Contact Person: ___ Phone: ___

Dollar Amount Participation: $ ___

Percent Amount of Participation: ___%

*Letter of Intent attached? Yes ___ No ___
*Current Letter of Certification attached? Yes ___ No ___

Attach additional sheets as needed.

*** Letter(s) of Intent and current Letters of Certification must be submitted at the time of bid.**

Section 12: MBE/WBE LETTER OF INTENT - FORM 2

M/WBE Firm: Dynamicx Enterprises, Inc.

Certifying Agency: City of Chicago

Contact Person: Nicolas Diaz

Certification Expiration Date:

Address: 4751 S Central Ave

Ethnicity: Hispanic

City/State: Chicago, IL Zip: 60638

Bid/Proposal/Contract #: 1523-14815

Phone: (708) 929-4551 Fax: (708) 929-4553

FEIN #: 90-0496345

Email: dynamicx4751@comcast.net

Participation: [X] Direct [ ] Indirect

Will the M/WBE firm be subcontracting any of the goods or services of this contract to another firm?

[X] No [ ] Yes – Please attach explanation. Proposed Subcontractor(s):

The undersigned M/WBE is prepared to provide the following Commodities/Services for the above named Project/ Contract: *(If more space is needed to fully describe M/WBE Firm's proposed scope of work and/or payment schedule, attach additional sheets)*

SEE ATTACHED.

Indicate the **Dollar Amount**, **Percentage**, and the **Terms of Payment** for the above-described Commodities/ Services:

$1,202,408.42 (27.5%) PER CCHD CONTRACT.

THE UNDERSIGNED PARTIES AGREE that this Letter of Intent will become a binding Subcontract Agreement for the above work, conditioned upon (1) the Bidder/Proposer's receipt of a signed contract from the County of Cook; (2) Undersigned Subcontractor remaining compliant with all relevant credentials, codes, ordinances and statutes required by Contractor, Cook County, and the State to participate as a MBE/WBE firm for the above work. The Undersigned Parties do also certify that they did not affix their signatures to this document until all areas under Description of Service/ Supply and Fee/Cost were completed.

Signature (*M/WBE*)

Nicolas Diaz
Print Name

Dynamicx Enterprises, Inc.
Firm Name

August 11, 2015
Date

Subscribed and sworn before me

this 13 day of August, 2015.

Notary Public

SEAL

FELIPE GONZALEZ
OFFICIAL SEAL
Notary Public, State of Illinois
My Commission Expires
April 06, 2019

Signature (*Prime Bidder/Proposer*)

JOE BODZICH
Print Name

K-FIVE CONSTRUCTION CORP.
Firm Name

Aug. 13, 2015
Date

Subscribed and sworn before me

this 13 day of AUGUST, 2015.

Notary Public

SEAL

OFFICIAL SEAL
SUZANNE HOLCROOK
Notary Public - State of Illinois
My Commission Expires May 23, 2018

Dynamicx				
Description	Quantity	UM	Dynamicx	Total
1 - 1 - AGG BASE COURSE TYPE B, 4"	996	SY	$6.00	$5,976.00
2 - 2 - AGG BASE COURSE TYPE B, 8"	50	SY	$10.00	$500.00
5 - 5 - SUBBASE GRANULAR MATL TYPE B, 6"	5273	SY	$8.00	$42,184.00
20 - 20 - PAVEMENT FABRIC	4348	SY	$3.00	$13,044.00
21 - 21 - PCC SIDEWALK, 5"	6791	SF	$6.00	$40,746.00
22 - 22 - PCC DRIVEWAY PAVEMENT, 8"	100	SY	$70.00	$7,000.00
23 - 23 - PCC PAVEMENT 10"	2943	SY	$80.00	$235,440.00
24 - 24 - COMB CC&G REMOVAL	860	FOOT	$7.00	$6,020.00
25 - 25 - DRIVEWAY PAVEMENT REMOVAL	100	SY	$15.00	$1,500.00
26 - 26 - MEDIAN REMOVAL	300	SF	$4.00	$1,200.00
27 - 27 - PAVEMENT REMOVAL	2943	SY	$20.00	$58,860.00
28 - 28 - SIDEWALK REMOVAL	1091	SF	$2.00	$2,182.00
59 - 59 - COMB CC & G TYPE B-6.12	50	FOOT	$30.00	$1,500.00
60 - 60 - COMB CC & G TYPE B-6.24	894	FOOT	$35.00	$31,290.00
61 - 61 - COMB CC&G TYPE M-2.12	93	FOOT	$30.00	$2,790.00
64 - 64 - CONCRETE MEDIAN, TYPE C-4	373	SF	$10.00	$3,730.00
65 - 65 - CLASS B PATCHES, TYPE I, 10" (PARTIAL)	140	SY	$110.00	$15,400.00
66 - 66 - CLASS B PATCHES, TYPE II, 10" (PARTIAL)	5190	SY	$95.00	$493,050.00
67 - 67 - CLASS B PATCHES, TYPE III, 10" (PARTIAL)	440	SY	$85.00	$37,400.00
68 - 68 - CLASS B PATCHES, TYPE IV, 10" (PARTIAL)	705	SY	$84.00	$59,220.00
76 - 76 - DETECTABLE WARINGS	2750	SF	$20.00	$55,000.00
95 - 95 - MOBILIZATION	1	LS	$83,376.42	$83,376.42
98 - 98 - CRUSHED STONE (TEMP USE)	1	LS	$5,000.00	$5,000.00

GRAND TOTAL **$1,202,408.42**

DEPARTMENT OF PROCUREMENT SERVICES

CITY OF CHICAGO

JUN - 4 2015

Tomas Rios
Dynamicx Enterprises, Inc.
4751 S. Central Avenue
Chicago, IL 60638

Dear Tomas Rios:

We are pleased to inform you that **Dynamicx Enterprises, Inc.** has been recertified as a **Minority - Owned Business Enterprise ("MBE")** by the City of Chicago ("City"). This **MBE** certification is valid until **11/15/2015**; however your firm's certification must be revalidated annually. In the past the City has provided you with an annual letter confirming your certification; such letters will no longer be issued. As a consequence, we require you to be even more diligent in filing your **annual No-Change Affidavit 60 days** before your annual anniversary date.

Your firm's five year certification will expire on **11/15/2015**. You have an affirmative duty to file for recertification **60 days** prior to the date of the five year anniversary date. Therefore, you must file for recertification by **09/15/2015.**

It is important to note that you also have an ongoing affirmative duty to notify the City of any changes in ownership or control of your firm, or any other fact affecting your firm's eligibility for certification **within 10 days** of such change. These changes may include but are not limited to a change of address, change of business structure, change in ownership or ownership structure, change of business operations, gross receipts and or personal net worth that exceed the program threshold. Failure to provide the City with timely notice of such changes may result in the suspension or rescission of your certification. In addition, you may be liable for civil penalties under Chapter 1-22, "False Claims", of the Municipal Code of Chicago.

Please note – you shall be deemed to have had your certification lapse and will be ineligible to participate as a **MBE** if you fail to:

- File your annual No-Change Affidavit within the required time period;
- Provide financial or other records requested pursuant to an audit within the required time period;
- Notify the City of any changes affecting your firm's certification **within 10 days** of such change; or
- File your recertification within the required time period.

Please be reminded of your contractual obligation to cooperate with the City with respect to any reviews, audits or investigation of its contracts and affirmative action programs. We strongly encourage you to assist us in maintaining the integrity of our programs by reporting instances or suspicions of fraud or abuse to the **City's Inspector General at chicagoinspectorgeneral.org, or 866-IG-TIPLINE (866-448-4754).**

Be advised that if you or your firm is found to be involved in certification, bidding and/or contractual fraud or abuse, the City will pursue decertification and debarment. In addition to any other penalty imposed by law, any person who knowingly obtains, or knowingly assists another in obtaining a contract with the City by falsely representing the individual or entity, or the individual or entity assisted is guilty of a

JUN - 4 2015

misdemeanor, punishable by incarceration in the county jail for a period not to exceed six months, or a fine of not less than $5,000 and not more than $10,000 or both.

Your firm's name will be listed in the City's Directory of Minority and Women-Owned Business Enterprises in the specialty area(s) of:

NAICS Code(s):
237110 – Sewer Construction
237310 – Concrete Paving (i.e., Highway, Road, Street, Public Sidewalk)
238110 – Poured Concrete Foundation and Structure Contractors
238120 – Structural Steel and Precast Concrete Contractors
238140 – Masonry Contractors
238990 – All Other Specialty Trade Contractors
561730 – Landscaping Services
562998 – All Other Miscellaneous Waste Management Services

Your firm's participation on City contracts will be credited only toward **Minority – Owned Business Enterprise** goals in your area(s) specialty. While your participation on City contracts is not limited to your area of specialty, credit toward goals will be given only for work that is self-performed and providing a commercially useful function that is done in the approved specialty category.

Thank you for your interest in the City's Minority and Women-Owned Business Enterprise (MBE/WBE) Program.

Sincerely,

Jamie L. Rhee
Chief Procurement Officer

JLR/ab

Illinois Department of Transportation
Office of Business & Workforce Diversity
2300 South Dirksen Parkway / Springfield, Illinois 62764

February 25, 2013

CERTIFIED-RETURN RECEIPT REQUESTED

Guillermina Diaz
Dynamicx Enterprises, Inc.
4751 S. Central Ave.
Chicago, IL 60638

Dear Guillermina Diaz:

The Illinois Department of Transportation (IDOT), your host agency, has reviewed your *Continued DBE Eligibility Affidavit (CEA)* and supporting documentation and is pleased to inform you that your firm continues to meet the Disadvantaged Business Enterprise (DBE) program certification eligibility standards set forth in 49 CFR Part 26.

This certification allows your firm to participate as a DBE in the Illinois Unified Certification Program (IL UCP). The participating agencies include the Illinois Department of Transportation, the City of Chicago, the Chicago Transit Authority, Metra, and Pace.

Your certification is approved for a five (5) year period, commencing on **January 22, 2013**. To remain certified with the IL UCP during the five-year period, you must submit a *No Change Affidavit* each year. Notification will be sent to you sixty (60) days prior to the anniversary date of your certification. It is your responsibility to ensure that your certification is kept current by submitting the required information in a timely manner. Failure to provide this information is a ground for removal of certification based on failure to cooperate pursuant to 49 CFR 26.109(c).

If there is any change in circumstances that affects your ability to meet size, disadvantaged status, ownership, or control requirements or any material change in the information provided in your application, you must provide written notification to this agency within thirty (30) days of the occurrence of the change. Failure to provide this information is a ground for removal of certification pursuant to 49 CFR 26.83(i).

Your firm's name will appear in the IL UCP DBE Directory in the following area(s) of specialty:

DRAINAGE
CURB & GUTTER, SIDEWALKS
MISCELLANEOUS CONCRETE

This Directory is used by prime contractors/consultants, as well as other agencies, to solicit participation of DBE firms. The Directory can be accessed on the Internet at www.dot.il.gov/ucp/ucpdirectorybyname.pdf.

Your participation on contracts will only be credited toward DBE contract goals when you perform in your firm's approved area(s) of specialty. Credit for participation in an area outside your specialty requires prior approval (verification of resources, expertise, and corresponding support documentation, etc.).

Please note:

- This certification does not attest to your firm's abilities to perform in the approved work category(ies).
- Your certification may be revoked if your firm is found to be involved in bidding or contractual irregularities or has violated DBE program regulations pursuant to 49 CFR Part 26.107.
- For work to count toward a DBE contract goal, the DBE firm must perform a "commercially useful function" pursuant to 49 CFR Part 26.55. A DBE is considered to perform a commercially useful function when it is responsible for execution of a distinct element of the work of a contract and carrying out its responsibilities by actually performing, managing, and supervising the work involved.

Please direct all inquiries and any questions to this agency at (217) 782-5490.

Sincerely,

Debra A. Clark, Acting Bureau Chief
Bureau of Small Business Enterprises

Enclosure

Illinois Department of Transportation

Dynamics Enterprises, Inc.

is hereby certified as a

Disadvantaged Business Enterprise

This certificate is valid under current firm ownership and operational control only and supercedes any authorization or listing previously issued.

Ann L. Schneider
Secretary
Illinois Department of Transportation

Debra A. Clark
Acting Bureau Chief
Bureau of Small Business Enterprises

Effective the 22nd day of January 2013

Illinois Department of Transportation
Office of Business & Workforce Diversity
2300 South Dirksen Parkway / Springfield, Illinois 62764

March 11, 2015

CERTIFIED-RETURN RECEIPT REQUESTED

Ms. Guillermina Diaz
Dynamicx Enterprises, Inc.
4751 S. Central Ave.
Chicago, IL 60638

Dear Ms. Diaz:

This is written notification that the Illinois Department of Transportation (IDOT) has revised your work categories due to your written request. As of the date of this letter, your approved categories will be:

- Drainage
- Curb & Gutter, Sidewalks
- Miscellaneous Concrete
- Seeding & Sodding

The IL UCP DBE Directory will reflect the revised categories. If you have any questions or require additional information, please contact this agency at (217) 782-5490.

Sincerely,

Debra A. Clark, Manager
Certification Section
Bureau of Small Business Enterprises

Illinois Department of Transportation
Office of Business & Workforce Diversity
2300 South Dirksen Parkway / Springfield, Illinois 62764

May 06, 2015

CERTIFIED-RETURN RECEIPT REQUESTED

Ms. Guillermina Diaz
Dynamicx Enterprises, Inc.
4751 S. Central Ave.
Chicago, IL 60638

Dear Ms. Diaz:

The Illinois Department of Transportation (IDOT) has approved the "No Change Affidavit" for Dynamicx Enterprises, Inc. and determined that the firm continues to meet DBE eligibility standards to perform work towards DBE goals.

In order to remain certified and in good standing, you must annually submit a No Change Affidavit. IDOT will send an affidavit form 60 days prior to the firm's next anniversary date.

Should the submitted information change, you are required to notify IDOT's Bureau of Small Business Enterprises (bureau) within 30 days of the change.

Note: Pursuant to 49 CFR Part 26.83(i), whenever there are <u>any</u> change in circumstances affecting your firm's eligibility status, your firm <u>must</u> provide written notification to IDOT within 30 days of the occurrence of the change. If you fail to make timely notification, it may result in the loss of your firm's certification.

If you have any questions, please contact the Bureau of Small Business Enterprises at (217) 782-5490.

Sincerely,

Debra A. Clark, Manager
Certification Section
Bureau of Small Business Enterprises

Section 12: PETITION FOR REDUCTION/WAIVER OF MBE/WBE PARTICIPATION – FORM 3

A. **BIDDER/PROPOSER HEREBY REQUESTS:**

☐ **FULL MBE WAIVER** ☐ **FULL WBE WAIVER**

☐ **REDUCTION (PARTIAL MBE and/or WBE PARTICIPATION)**

_____% of Reduction for MBE Participation
_____% of Reduction for WBE Participation

B. **REASON FOR FULL/REDUCTION WAIVER REQUEST**

Bidder/Proposer shall check each item applicable to its reason for a waiver request. Additionally, supporting documentation shall be submitted with this request.

☐ (1) Lack of sufficient qualified MBEs and/or WBEs capable of providing the goods or services required by the contract. **(Please explain)**

☐ (2) The specifications and necessary requirements for performing the contract make it impossible or economically infeasible to divide the contract to enable the contractor to utilize MBEs and/or WBEs in accordance with the applicable participation. **(Please explain)**

☐ (3) Price(s) quoted by potential MBEs and/or WBEs are above competitive levels and increase cost of doing business and would make acceptance of such MBE and/or WBE bid economically impracticable, taking into consideration the percentage of total contract price represented by such MBE and/or WBE bid. **(Please explain)**

☐ (4) There are other relevant factors making it impossible or economically infeasible to utilize MBE and/or WBE firms. **(Please explain)**

C. **GOOD FAITH EFFORTS TO OBTAIN MBE/WBE PARTICIPATION**

☐ (1) Made timely written solicitation to identified MBEs and WBEs for utilization of goods and/or services; and provided MBEs and WBEs with a timely opportunity to review and obtain relevant specifications, terms and conditions of the proposal to enable MBEs and WBEs to prepare an informed response to solicitation. **(Attach of copy written solicitations made)**

☐ (2) Used the services and assistance of the Office of Contract Compliance staff. **(Please explain)**

☐ (3) Timely notified and used the services and assistance of community, minority and women business organizations. **(Attach of copy written solicitations made)**

☐ (4) Followed up on initial solicitation of MBEs and WBEs to determine if firms are interested in doing business. **(Attach supporting documentation)**

☐ (5) Engaged MBEs & WBEs for direct/indirect participation. **(Please explain)**

D. **OTHER RELEVANT INFORMATION**

Attach any other documentation relative to Good Faith Efforts in complying with MBE/WBE participation.

OFFICE OF CONTRACT COMPLIANCE
JACQUELINE GOMEZ
DIRECTOR
118 N. Clark, County Building, Room 1020 ● Chicago, Illinois 60602 ● (312) 603-5502

TONI PRECKWINKLE
PRESIDENT
Cook County Board of Commissioners

RICHARD R. BOYKIN
1st District

ROBERT STEELE
2nd District

JERRY BUTLER
3rd District

STANLEY MOORE
4th District

DEBORAH SIMS
5th District

JOAN PATRICIA MURPHY
6th District

JESUS G. GARCIA
7th District

LUIS ARROYO JR.
8th District

PETER N. SILVESTRI
9th District

BRIDGET GAINER
10th District

JOHN P. DALEY
11th District

JOHN A. FRITCHEY
12th District

LARRY SUFFREDIN
13th District

GREGG GOSLIN
14th District

TIMOTHY O. SCHNEIDER
15th District

JEFFREY R. TOBOLSKI
16th District

SEAN M. MORRISON
17th District

October 2, 2015

Ms. Shannon Andrews
Chief Procurement Officer
County Building, Room 1018
Chicago, IL 60602

Re: Contract #1523-14815
Pavement Preservation and Rehabilitation Program – South 2015

Dear Ms. Andrews:

The following bid for the above reference contract has been reviewed for compliance with the General Conditions regarding the Minority- and Women-owned Business Enterprises Ordinance and has been found to be responsive to the construction goal of 21.5% MBE and 5% WBE participation.

Bidder: K Five Construction
Bid Amount: $4,373,000.00

MWBE	Status	Certifying Agency	Commitment
Dynamicx Enterprises	MBE-9	City of Chicago	27.5% Direct
GEM Construction	WBE-7	City of Chicago	5.8% Direct
			33.3%

The Office of Contract Compliance has been advised by the Requesting Department that no other bidders are being recommended for award. Additionally, please note that original forms were used in the determination of the responsiveness of this contract.

Sincerely,

Jacqueline Gomez

Jacqueline Gomez
Director

JG/la

Cc: Pui Szeto, Dept. of Transportation and Highway

SURETY'S STATEMENT
of
QUALIFICATION FOR BONDING
(Section 10)

This document must be accurately executed (by the Surety Company) and yielded as part of this Bid.

IF THIS DOCUMENT IS NOT ACCURATELY EXECUTED AND SUBMITTED WITH THE BID PACKAGE, THIS CONSTITUTES CAUSE FOR DISQUALIFICATION OF THE VENDOR FROM BIDDING ON THIS CONTRACT.

The undersigned confirms that: Continental Casualty Company
(SURETY COMPANY)

would execute a Performance/Payment Bond in favor of the County of Cook for the full amount

of the bid/contract: **1523-14815**
(NUMBER)

to: K-Five Construction Corporation
(BIDDER)

The penalty of this bond is to be $ 100% of Total Amount Bid
(TOTAL DOLLAR AMOUNT OF CONTRACT)

SURETY

(SURETY COMPANY'S AUTHORIZED SIGNATURE)

CORPORATE

Kimberly R. Holmes
(ATTORNEY-IN-FACT)

002128 20443
AMB # NAIC

SEAL-

POWER OF ATTORNEY APPOINTING INDIVIDUAL ATTORNEY-IN-FACT

Know All Men By These Presents, That Continental Casualty Company, an Illinois insurance company, National Fire Insurance Company of Hartford, an Illinois insurance company, and American Casualty Company of Reading, Pennsylvania, a Pennsylvania insurance company (herein called "the CNA Companies"), are duly organized and existing insurance companies having their principal offices in the City of Chicago, and State of Illinois, and that they do by virtue of the signatures and seals herein affixed hereby make, constitute and appoint

Kimberly R. Holmes , Individually

of Lisle, IL their true and lawful Attorney(s)-in-Fact with full power and authority hereby conferred to sign, seal and execute for and on their behalf bonds, undertakings and other obligatory instruments of similar nature

- In Unlimited Amounts -

Surety Bond No.: Bid Bond
Principal: K-Five Construction Corporation
Obligee: County of Cook, Department of Transportation and Highways

and to bind them thereby as fully and to the same extent as if such instruments were signed by a duly authorized officer of their insurance companies and all the acts of said Attorney, pursuant to the authority hereby given is hereby ratified and confirmed.

This Power of Attorney is made and executed pursuant to and by authority of the By-Law and Resolutions, printed on the reverse hereof, duly adopted, as indicated, by the Boards of Directors of the insurance companies.

In Witness Whereof, the CNA Companies have caused these presents to be signed by their Vice President and their corporate seals to be hereto affixed on this 22nd day of May, 2015.

Continental Casualty Company
National Fire Insurance Company of Hartford
American Casualty Company of Reading, Pennsylvania

Paul T. Bruflat Vice President

State of South Dakota, County of Minnehaha, ss:

On this 22nd day of May, 2015, before me personally came Paul T. Bruflat to me known, who, being by me duly sworn, did depose and say: that he resides in the City of Sioux Falls, State of South Dakota; that he is a Vice President of Continental Casualty Company, an Illinois insurance company, National Fire Insurance Company of Hartford, an Illinois insurance company, and American Casualty Company of Reading, Pennsylvania, a Pennsylvania insurance company described in and which executed the above instrument; that he knows the seals of said insurance companies; that the seals affixed to the said instrument are such corporate seals; that they were so affixed pursuant to authority given by the Boards of Directors of said insurance companies and that he signed his name thereto pursuant to like authority, and acknowledges same to be the act and deed of said insurance companies.

S. EICH
NOTARY PUBLIC
SOUTH DAKOTA

My Commission Expires February 12, 2021

S. Eich Notary Public

CERTIFICATE

I, D. Bult, Assistant Secretary of Continental Casualty Company, an Illinois insurance company, National Fire Insurance Company of Hartford, an Illinois insurance company, and American Casualty Company of Reading, Pennsylvania, a Pennsylvania insurance company do hereby certify that the Power of Attorney herein above set forth is still in force, and further certify that the By-Law and Resolution of the Board of Directors of the insurance companies printed on the reverse hereof is still in force. In testimony whereof I have hereunto subscribed my name and affixed the seal of the said insurance companies this 14th day of August , 2015 .

Continental Casualty Company
National Fire Insurance Company of Hartford
American Casualty Company of Reading, Pennsylvania

D. Bult Assistant Secretary

Form F6853-4/2012

Authorizing By-Laws and Resolutions

ADOPTED BY THE BOARD OF DIRECTORS OF CONTINENTAL CASUALTY COMPANY:

This Power of Attorney is made and executed pursuant to and by authority of the following resolution duly adopted by the Board of Directors of the Company at a meeting held on May 12, 1995:

"RESOLVED: That any Senior or Group Vice President may authorize an officer to sign specific documents, agreements and instruments on behalf of the Company provided that the name of such authorized officer and a description of the documents, agreements or instruments that such officer may sign will be provided in writing by the Senior or Group Vice President to the Secretary of the Company prior to such execution becoming effective."

This Power of Attorney is signed by Paul T. Bruflat, Vice President, who has been authorized pursuant to the above resolution to execute power of attorneys on behalf of Continental Casualty Company.

This Power of Attorney is signed and sealed by facsimile under and by the authority of the following Resolution adopted by the Board of Directors of the Company by unanimous written consent dated the 25th day of April, 2012:

"Whereas, the bylaws of the Company or specific resolution of the Board of Directors has authorized various officers (the "Authorized Officers")to execute various policies, bonds, undertakings and other obligatory instruments of like nature; and

Whereas, from time to time, the signature of the Authorized Officers, in addition to being provided in original, hard copy format, may be provided via facsimile or otherwise in an electronic format (collectively, "Electronic Signatures"); Now therefore be it resolved: that the Electronic Signature of any Authorized Officer shall be valid and binding on the Company. "

ADOPTED BY THE BOARD OF DIRECTORS OF NATIONAL FIRE INSURANCE COMPANY OF HARTFORD:

This Power of Attorney is made and executed pursuant to and by authority of the following resolution duly adopted by the Board of Directors of the Company by unanimous written consent dated May 10, 1995:

"RESOLVED: That any Senior or Group Vice President may authorize an officer to sign specific documents, agreements and instruments on behalf of the Company provided that the name of such authorized officer and a description of the documents, agreements or instruments that such officer may sign will be provided in writing by the Senior or Group Vice President to the Secretary of the Company prior to such execution becoming effective."

This Power of Attorney is signed by Paul T. Bruflat, Vice President, who has been authorized pursuant to the above resolution to execute power of attorneys on behalf of National Fire Insurance Company of Hartford.

This Power of Attorney is signed and sealed by facsimile under and by the authority of the following Resolution adopted by the Board of Directors of the Company by unanimous written consent dated the 25th day of April, 2012:

"Whereas, the bylaws of the Company or specific resolution of the Board of Directors has authorized various officers (the "Authorized Officers")to execute various policies, bonds, undertakings and other obligatory instruments of like nature; and

Whereas, from time to time, the signature of the Authorized Officers, in addition to being provided in original, hard copy format, may be provided via facsimile or otherwise in an electronic format (collectively, "Electronic Signatures"); Now therefore be it resolved: that the Electronic Signature of any Authorized Officer shall be valid and binding on the Company. "

ADOPTED BY THE BOARD OF DIRECTORS OF AMERICAN CASUALTY COMPANY OF READING, PENNSYLVANIA:

This Power of Attorney is made and executed pursuant to and by authority of the following resolution duly adopted by the Board of Directors of the Company by unanimous written consent dated May 10, 1995:

"RESOLVED: That any Senior or Group Vice President may authorize an officer to sign specific documents, agreements and instruments on behalf of the Company provided that the name of such authorized officer and a description of the documents, agreements or instruments that such officer may sign will be provided in writing by the Senior or Group Vice President to the Secretary of the Company prior to such execution becoming effective."

This Power of Attorney is signed by Paul T. Bruflat, Vice President, who has been authorized pursuant to the above resolution to execute power of attorneys on behalf of American Casualty Company of Reading, Pennsylvania.

This Power of Attorney is signed and sealed by facsimile under and by the authority of the following Resolution adopted by the Board of Directors of the Company by unanimous written consent dated the 25th day of April, 2012:

"Whereas, the bylaws of the Company or specific resolution of the Board of Directors has authorized various officers (the "Authorized Officers")to execute various policies, bonds, undertakings and other obligatory instruments of like nature; and

Whereas, from time to time, the signature of the Authorized Officers, in addition to being provided in original, hard copy format, may be provided via facsimile or otherwise in an electronic format (collectively, "Electronic Signatures"); Now therefore be it resolved: that the Electronic Signature of any Authorized Officer shall be valid and binding on the Company. "

COOK COUNTY DEPARTMENT OF TRANSPORTATION AND HIGHWAYS
TRUST AGREEMENT

THIS TRUST AGREEMENT is made and entered into by and between the County of Cook, by and through the Department of Transportation and Highways, whose address is 69 West Washington, Suite 2300, Chicago, Illinois, 60602, hereinafter called the COUNTY, and K-FIVE CONSTRUCTION CORPORATION whose address is 13769 MAIN STREET, LEMONT, IL 60439, _____, IL hereinafter called the CONTRACTOR, and COUNTRYSIDE BANK, a FINANCIAL INSTITUTION or trust company located in Cook County, whose deposits are insured by an agency or instrumentality of the federal government and whose address is 6734 JOLIET ROAD, COUNTRYSIDE, IL, phone number (708)485-3100 hereinafter called the FINANCIAL INSTITUTION. Contact person being LIZ ZILLIS. Account number being: 1050012008

WITNESSETH:

WHEREAS the COUNTY has awarded to the CONTRACTOR Cook County Contract Number **1523-14815, PAVEMENT PRESERVATION AND REHABILITATION PROGRAM 2015 – SOUTH REBID** ; Section Number **14-PPRPS-01-PV** providing for the construction of a COUNTY highway improvement for a total price of $ 4,373,000.00 dollars; on the following locations:

107th Street - 88th Avenue to Kean Avenue
103rd Street - 88th Avenue to Kean Avenue
Plainfield Road - Willow Springs Rd to East Avenue
Kedzie Avenue - At Governors Highway
Kedzie Avenue - 183rd Street to 175th Street
Sauk Trail - Cicero Avenue to Governors Highway
Wolf Road - at 139th Street

WHEREAS under Section 5-409 of the Illinois Highway Code, as amended, the COUNTY is authorized to make progress payments as the CONTRACTOR performs the work under the contract and may retain a percentage of progress payments; and

WHEREAS the COUNTY may, at the request of CONTRACTOR, deposit the retainage under a Trust Agreement with a FINANCIAL INSTITUTION of the CONTRACTOR'S choice which is located in Cook County and has been approved for the deposit of such funds by the Superintendent of the Cook County Department of Transportation and Highways pursuant to Cook County Code Section 34-36; and

WHEREAS by execution of this Agreement, the CONTRACTOR and said FINANCIAL INSTITUTION request that the retainage be deposited with said FINANCIAL INSTITUTION as provided by law.

NOW THEREFORE, the parties do hereby agree that:

1. This Agreement shall not change any of the rights, duties, privileges or responsibilities of the parties to the above-referenced construction contract, except as may be provided herein.

2. Notwithstanding the provisions of this Agreement, the COUNTY may withhold progress payments or any portion thereof on account of lien claims, liquidated damages, or as may otherwise be provided by the above contract or by law.

3. All progress payments, including final payment under the above contract, shall be made by COUNTY warrants payable to the CONTRACTOR and FINANCIAL INSTITUTION, as trustee, jointly, and such payments shall be sent to the FINANCIAL INSTITUTION at the above address.

4. The progress payments shall specify on a copy of the COUNTY'S invoice to be mailed with the warrant the amount thereof to be paid to the CONTRACTOR and the amount to be held by the FINANCIAL INSTITUTION as retainage under this Agreement.

5. The money so held by the FINANCIAL INSTITUTION shall be described as "retainage" and shall be held in trust according to the terms of this Agreement. Interest earned on the retainage may be paid to the CONTRACTOR as it accrues or as the FINANCIAL INSTITUTION'S policy permits.

6. The principal balance of the retainage, or any part thereof, shall not be paid over to the CONTRACTOR except upon written directive to the FINANCIAL INSTITUTION by the COUNTY.

7. The FINANCIAL INSTITUTION may invest or reinvest said retainage in:

a. Certificates of Deposit Issued by a financial institution whose principal office is located in Cook County, including this FINANCIAL INSTITUTION;
b. United States Government Bonds;
c. United States Treasury Notes;
d. United States Treasury Bills;
e. Time Deposit on Open Account

Provided, however, that the investment of said retainage shall not relieve the FINANCIAL INSTITUTION from the return or repayment of such funds within ninety (90) days as provided in this Agreement.

8. Retainage is the property of the COUNTY until notice of final payment, and the principal amount, or any part thereof, shall not be pledged or used as security for any purpose.

9. The COUNTY shall be the sole judge of return or repayment of the funds to the Cook County Treasurer. Upon written demand made by the COUNTY to the FINANCIAL INSTITUTION for the return or repayment of the retainage, the FINANCIAL INSTITUTION shall make such return or repayment regardless of whether the COUNTY shall state any reason therefor and without imposition of any other requirements or conditions.

10. The repayment or return of retainage to the COUNTY shall be by check from the FINANCIAL INSTITUTION payable to the Treasurer of Cook County and shall be mailed to the COUNTY within ninety (90) days after the COUNTY'S demand.

11. The CONTRACTOR does not waive or release any rights he has against the COUNTY for breach of contract, including this Agreement, by reason of the repayment by the FINANCIAL INSTITUTION to the COUNTY on account of demand made by the COUNTY.

12. In the event demand for the retainage is made under this Agreement by the COUNTY, the COUNTY may specify, in its sole judgment, the amount to be repaid or returned as all or part of the principal balance of the retainage.

Bond#929620116

PERFORMANCE AND PAYMENT BOND TO THE COUNTY OF COOK

Know All Men by These Presents, That we, K-Five Construction Corporation

as principle, and Continental Casualty Company

333 S. Wabash Avenue, 41st Flr., Chicago, IL 60604, as surety, are

held and firmly bound unto the County of Cook in the penal sum of Four Million Three Hundred Seventy - Three and 00/100---------- Dollars ($ 4,373,000.00), lawful money of the United States of America, for the payment of which sum of money well and truly to be made, we bind ourselves, our respective heirs, executors, administrators, successors and assigns, firmly, by these presents.

Signed, sealed, and delivered this 25th day of August A.D. 20 15.

THE CONDITION OF THE ABOVE OBLIGATION IS SUCH, That whereas, the above bounded principle entered into a certain contract with the County of Cook, bearing date the day of August 24th, 2015 for

PAVEMENT PRESERVATION AND REHABILITATION PROGRAM 2015 – SOUTH REBID; Section Number 14-PPRPS-01-PV in Various Townships, Cook County Contract No.**1523-14815** on the following locations:

107th Street - 88th Avenue to Kean Avenue
103rd Street - 88th Avenue to Kean Avenue
Plainfield Road - Willow Springs Rd to East Avenue
Kedzie Avenue - At Governor's Highway
Kedzie Avenue - 183rd Street to 175th Street
Sauk Trail - Cicero Avenue to Governor's Highway
Wolf Road - at 139th Street

The terms and conditions of the Illinois Public Construction Bond Act, 30 ILCS 550 *et seq.* are hereby incorporated by reference.

It is hereby expressly understood and agreed, and made a condition hereof, that any judgment rendered in favor of any person not a party to said contract against the County of Cook in any suit arising out of said contract or its performance, when reasonable notice of the pendency of such suit shall have been given to said principle and to said surety, shall be conclusive against said principle and said surety as to both liability and amount.

In Witness Whereof, said parties hereto have caused this bond to be executed and delivered at Chicago, Illinois, all on the day and year first above written.

K-Five Construction Corporation

PRINCIPAL/CONTRACTOR SEAL

By Robert G. Krug PRESIDENT

Robert W. Krug SECRETARY

Continental Casualty Company

SURETY SEAL

By SURETY/ATTORNEY-IN-FACT (ATTACH POWER OF ATTORNEY)

Christine Eitel

02129 AMB#

20478 NAIC#

Approved as to form:

By: Assistant States Attorney

STATE OF ILLINOIS

COUNTY OF DuPage

I, Ann Marie Waters Notary Public of Cook County, in the State of Illinois , do hereby certify that Christine Eitel Attorney-in-Fact, of the Continental Casualty Company who is personally known to me to be the same person whose name is subscribed to the foregoing instrument, appeared before me this day in person, and acknowledged that she signed, sealed and delivered said instrument, for and on behalf of the Continental Casualty Company for the used and purposes therein set forth.

Given under my hand and notarial seal at my office in the City of Lisle in said County, this 25th day of August A.D., 2015.

Ann Marie Waters

(Notary Public) Ann Marie Waters
My Commission expires: 07/05/2017

Notary Seal:

OFFICIAL SEAL
ANN MARIE WATERS
NOTARY PUBLIC - STATE OF ILLINOIS
MY COMMISSION EXPIRES:07/05/17

POWER OF ATTORNEY APPOINTING INDIVIDUAL ATTORNEY-IN-FACT

Know All Men By These Presents, That Continental Casualty Company, an Illinois insurance company, National Fire Insurance Company of Hartford, an Illinois insurance company, and American Casualty Company of Reading, Pennsylvania, a Pennsylvania insurance company (herein called "the CNA Companies"), are duly organized and existing insurance companies having their principal offices in the City of Chicago, and State of Illinois, and that they do by virtue of the signatures and seals herein affixed hereby make, constitute and appoint

Karen A Ryan, Harriet R Reilly, William P Weible, William Cahill, Kimberly R Holmes, Melissa Newman, Kimberly Sawicki, Ann Marie Waters, Christine Eitel, Deborah A Campbell, Leigh Ann Francis, Individually

of Lisle, IL, their true and lawful Attorney(s)-in-Fact with full power and authority hereby conferred to sign, seal and execute for and on their behalf bonds, undertakings and other obligatory instruments of similar nature

- In Unlimited Amounts -

and to bind them thereby as fully and to the same extent as if such instruments were signed by a duly authorized officer of their insurance companies and all the acts of said Attorney, pursuant to the authority hereby given is hereby ratified and confirmed.

This Power of Attorney is made and executed pursuant to and by authority of the By-Law and Resolutions, printed on the reverse hereof, duly adopted, as indicated, by the Boards of Directors of the insurance companies.

In Witness Whereof, the CNA Companies have caused these presents to be signed by their Vice President and their corporate seals to be hereto affixed on this 2nd day of July, 2015.

Continental Casualty Company
National Fire Insurance Company of Hartford
American Casualty Company of Reading, Pennsylvania

Paul T. Bruflat — Vice President

State of South Dakota, County of Minnehaha, ss:

On this 2nd day of July, 2015, before me personally came Paul T. Bruflat to me known, who, being by me duly sworn, did depose and say: that he resides in the City of Sioux Falls, State of South Dakota; that he is a Vice President of Continental Casualty Company, an Illinois insurance company, National Fire Insurance Company of Hartford, an Illinois insurance company, and American Casualty Company of Reading, Pennsylvania, a Pennsylvania insurance company described in and which executed the above instrument; that he knows the seals of said insurance companies; that the seals affixed to the said instrument are such corporate seals; that they were so affixed pursuant to authority given by the Boards of Directors of said insurance companies and that he signed his name thereto pursuant to like authority, and acknowledges same to be the act and deed of said insurance companies.

S. EICH
NOTARY PUBLIC
SOUTH DAKOTA

My Commission Expires February 12, 2021

S. Eich — Notary Public

CERTIFICATE

I, D. Bult, Assistant Secretary of Continental Casualty Company, an Illinois insurance company, National Fire Insurance Company of Hartford, an Illinois insurance company, and American Casualty Company of Reading, Pennsylvania, a Pennsylvania insurance company do hereby certify that the Power of Attorney herein above set forth is still in force, and further certify that the By-Law and Resolution of the Board of Directors of the insurance companies printed on the reverse hereof is still in force. In testimony whereof I have hereunto subscribed my name and affixed the seal of the said insurance companies this 25 day of August, 2015.

Continental Casualty Company
National Fire Insurance Company of Hartford
American Casualty Company of Reading, Pennsylvania

D. Bult — Assistant Secretary

Form F6853-4/2012

Authorizing By-Laws and Resolutions

ADOPTED BY THE BOARD OF DIRECTORS OF CONTINENTAL CASUALTY COMPANY:

This Power of Attorney is made and executed pursuant to and by authority of the following resolution duly adopted by the Board of Directors of the Company at a meeting held on May 12, 1995:

"RESOLVED: That any Senior or Group Vice President may authorize an officer to sign specific documents, agreements and instruments on behalf of the Company provided that the name of such authorized officer and a description of the documents, agreements or instruments that such officer may sign will be provided in writing by the Senior or Group Vice President to the Secretary of the Company prior to such execution becoming effective."

This Power of Attorney is signed by Paul T. Bruflat, Vice President, who has been authorized pursuant to the above resolution to execute power of attorneys on behalf of Continental Casualty Company.

This Power of Attorney is signed and sealed by facsimile under and by the authority of the following Resolution adopted by the Board of Directors of the Company by unanimous written consent dated the 25th day of April, 2012:

"Whereas, the bylaws of the Company or specific resolution of the Board of Directors has authorized various officers (the "Authorized Officers") to execute various policies, bonds, undertakings and other obligatory instruments of like nature; and

Whereas, from time to time, the signature of the Authorized Officers, in addition to being provided in original, hard copy format, may be provided via facsimile or otherwise in an electronic format (collectively, "Electronic Signatures"); Now therefore be it resolved: that the Electronic Signature of any Authorized Officer shall be valid and binding on the Company."

ADOPTED BY THE BOARD OF DIRECTORS OF NATIONAL FIRE INSURANCE COMPANY OF HARTFORD:

This Power of Attorney is made and executed pursuant to and by authority of the following resolution duly adopted by the Board of Directors of the Company by unanimous written consent dated May 10, 1995:

"RESOLVED: That any Senior or Group Vice President may authorize an officer to sign specific documents, agreements and instruments on behalf of the Company provided that the name of such authorized officer and a description of the documents, agreements or instruments that such officer may sign will be provided in writing by the Senior or Group Vice President to the Secretary of the Company prior to such execution becoming effective."

This Power of Attorney is signed by Paul T. Bruflat, Vice President, who has been authorized pursuant to the above resolution to execute power of attorneys on behalf of National fire Insurance Company of Hartford.

This Power of Attorney is signed and sealed by facsimile under and by the authority of the following Resolution adopted by the Board of Directors of the Company by unanimous written consent dated the 25th day of April, 2012:

"Whereas, the bylaws of the Company or specific resolution of the Board of Directors has authorized various officers (the "Authorized Officers") to execute various policies, bonds, undertakings and other obligatory instruments of like nature; and

Whereas, from time to time, the signature of the Authorized Officers, in addition to being provided in original, hard copy format, may be provided via facsimile or otherwise in an electronic format (collectively, "Electronic Signatures"); Now therefore be it resolved: that the Electronic Signature of any Authorized Officer shall be valid and binding on the Company."

ADOPTED BY THE BOARD OF DIRECTORS OF AMERICAN CASUALTY COMPANY OF READING, PENNSYLVANIA:

This Power of Attorney is made and executed pursuant to and by authority of the following resolution duly adopted by the Board of Directors of the Company by unanimous written consent dated May 10, 1995:

"RESOLVED: That any Senior or Group Vice President may authorize an officer to sign specific documents, agreements and instruments on behalf of the Company provided that the name of such authorized officer and a description of the documents, agreements or instruments that such officer may sign will be provided in writing by the Senior or Group Vice President to the Secretary of the Company prior to such execution becoming effective."

This Power of Attorney is signed by Paul T. Bruflat, Vice President, who has been authorized pursuant to the above resolution to execute power of attorneys on behalf of American Casualty Company of Reading, Pennsylvania.

This Power of Attorney is signed and sealed by facsimile under and by the authority of the following Resolution adopted by the Board of Directors of the Company by unanimous written consent dated the 25th day of April, 2012:

"Whereas, the bylaws of the Company or specific resolution of the Board of Directors has authorized various officers (the "Authorized Officers") to execute various policies, bonds, undertakings and other obligatory instruments of like nature; and

Whereas, from time to time, the signature of the Authorized Officers, in addition to being provided in original, hard copy format, may be provided via facsimile or otherwise in an electronic format (collectively, "Electronic Signatures"); Now therefore be it resolved: that the Electronic Signature of any Authorized Officer shall be valid and binding on the Company."

CERTIFICATE OF LIABILITY INSURANCE

DATE (MM/DD/YYYY): 8/24/2015

THIS CERTIFICATE IS ISSUED AS A MATTER OF INFORMATION ONLY AND CONFERS NO RIGHTS UPON THE CERTIFICATE HOLDER. THIS CERTIFICATE DOES NOT AFFIRMATIVELY OR NEGATIVELY AMEND, EXTEND OR ALTER THE COVERAGE AFFORDED BY THE POLICIES BELOW. THIS CERTIFICATE OF INSURANCE DOES NOT CONSTITUTE A CONTRACT BETWEEN THE ISSUING INSURER(S), AUTHORIZED REPRESENTATIVE OR PRODUCER, AND THE CERTIFICATE HOLDER.

IMPORTANT: If the certificate holder is an ADDITIONAL INSURED, the policy(ies) must be endorsed. If SUBROGATION IS WAIVED, subject to the terms and conditions of the policy, certain policies may require an endorsement. A statement on this certificate does not confer rights to the certificate holder in lieu of such endorsement(s).

PRODUCER
Columbian Agency
1005 Laraway Road
New Lenox IL 60451

CONTACT NAME: Lisa Sizemore, CISR, CRIS, MLIS
PHONE (A/C, No, Ext): 815-215-4703 FAX (A/C, No): 815-215-4743
E-MAIL ADDRESS: lsizemore@columbianagency.com

INSURER(S) AFFORDING COVERAGE	NAIC #
INSURER A: Old Republic Insurance Company	24147
INSURER B: National Fire & Marine	19410
INSURER C: Catlin Specialty Ins Co	15989
INSURER D: Charter Oak Fire Insurance Co	
INSURER E:	
INSURER F:	

INSURED KFIVE-1
K-Five Construction Corporation
13769 Main Street
Lemont IL 60439

COVERAGES **CERTIFICATE NUMBER:** 375116288 **REVISION NUMBER:**

THIS IS TO CERTIFY THAT THE POLICIES OF INSURANCE LISTED BELOW HAVE BEEN ISSUED TO THE INSURED NAMED ABOVE FOR THE POLICY PERIOD INDICATED. NOTWITHSTANDING ANY REQUIREMENT, TERM OR CONDITION OF ANY CONTRACT OR OTHER DOCUMENT WITH RESPECT TO WHICH THIS CERTIFICATE MAY BE ISSUED OR MAY PERTAIN, THE INSURANCE AFFORDED BY THE POLICIES DESCRIBED HEREIN IS SUBJECT TO ALL THE TERMS, EXCLUSIONS AND CONDITIONS OF SUCH POLICIES. LIMITS SHOWN MAY HAVE BEEN REDUCED BY PAID CLAIMS.

INSR LTR	TYPE OF INSURANCE	ADDL INSR	SUBR WVD	POLICY NUMBER	POLICY EFF (MM/DD/YYYY)	POLICY EXP (MM/DD/YYYY)	LIMITS	
A	GENERAL LIABILITY X COMMERCIAL GENERAL LIABILITY CLAIMS-MADE X OCCUR X XCU Included X Contractual Liab GEN'L AGGREGATE LIMIT APPLIES PER: POLICY X PRO-JECT LOC	Y	Y	A5DG05441	2/28/2015	2/28/2016	EACH OCCURRENCE DAMAGE TO RENTED PREMISES (Ea occurrence) MED EXP (Any one person) PERSONAL & ADV INJURY GENERAL AGGREGATE PRODUCTS - COMP/OP AGG $	$1,000,000 $300,000 $10,000 $1,000,000 $2,000,000 $2,000,000
A	AUTOMOBILE LIABILITY X ANY AUTO ALL OWNED AUTOS SCHEDULED AUTOS X HIRED AUTOS X NON-OWNED AUTOS	Y	Y	A5CA05441	2/28/2015	2/28/2016	COMBINED SINGLE LIMIT (Ea accident) BODILY INJURY (Per person) BODILY INJURY (Per accident) PROPERTY DAMAGE (Per accident) Hired Physical Damage	$1,000,000 $ $ $ $130,000 ACV
B	X UMBRELLA LIAB X OCCUR EXCESS LIAB CLAIMS-MADE DED X RETENTION $ 10,000			42-UMO-301093	2/28/2015	2/28/2016	EACH OCCURRENCE AGGREGATE *FOLLOWS FORM*	$25,000,000 $25,000,000 $
A	WORKERS COMPENSATION AND EMPLOYERS' LIABILITY ANY PROPRIETOR/PARTNER/EXECUTIVE OFFICER/MEMBER EXCLUDED? (Mandatory in NH) Y/N N If yes, describe under DESCRIPTION OF OPERATIONS below	N/A	Y	A5DW05441	2/28/2015	2/28/2016	X WC STATU-TORY LIMITS OTH-ER E.L. EACH ACCIDENT E.L. DISEASE - EA EMPLOYEE E.L. DISEASE - POLICY LIMIT	 $1,000,000 $1,000,000 $1,000,000
C D D	Pollution & Professional Liab. Contractors' Equipment Installation/Builders Risk			CPL2021940216 QT-660-2C421833 QT-660-2C421833	2/28/2015 2/28/2015 2/28/2015	2/28/2016 2/28/2016 2/28/2016	Each Loss/Aggregate Leased and/or Rented Any One Jobsite	$2,000,000 $500,000 Per Item $1,000,000

DESCRIPTION OF OPERATIONS / LOCATIONS / VEHICLES (Attach ACORD 101, Additional Remarks Schedule, if more space is required)

RE: K-Five Job #15081 - Pavement Preservation and Rehabilitation Program 2015 – SOUTH; Contract No. 1523-14815; Section 15-PPRPS-01-PV
Cook County, its officials and employees are included as an additional insured under the General Liability per attached CG2010/2037 forms and Auto policy if required by written contract with respect to all work performed by the named insured. *Waivers of Subrogation apply in favor of the additional insureds for General Liability, Auto, and Workers Compensation policies. *The coverage and limits conform to the minimums required by Article 107.27 of the Standard Specifications for Road and Bridge Construction*

CERTIFICATE HOLDER

Cook County Department of Transportation and Highways
69 West Washington Street
Contract Documents, Suite 2400
Chicago IL 60602

CANCELLATION

SHOULD ANY OF THE ABOVE DESCRIBED POLICIES BE CANCELLED BEFORE THE EXPIRATION DATE THEREOF, NOTICE WILL BE DELIVERED IN ACCORDANCE WITH THE POLICY PROVISIONS.

AUTHORIZED REPRESENTATIVE

© 1988-2010 ACORD CORPORATION. All rights reserved.

The ACORD name and logo are registered marks of ACORD

THIS ENDORSEMENT CHANGES THE POLICY. PLEASE READ IT CAREFULLY.

ADDITIONAL INSURED – OWNERS, LESSEES OR CONTRACTORS – COMPLETED OPERATIONS

This endorsement modifies insurance provided under the following:

COMMERCIAL GENERAL LIABILITY COVERAGE PART
PRODUCTS/COMPLETED OPERATIONS LIABILITY COVERAGE PART

SCHEDULE

Name Of Additional Insured Person(s) Or Organization(s)	Location And Description Of Completed Operations
WHERE REQUIRED BY WRITTEN CONTRACT, BUT ONLY WHEN COVERAGE FOR COMPLETED OPERATIONS IS SPECIFICALLY REQUIRED BY THAT CONTRACT.	ALL JOBS/LOCATIONS WHERE REQUIRED BY WRITTEN CONTRACT
Information required to complete this Schedule, if not shown above, will be shown in the Declarations.	

A. Section II – Who Is An Insured is amended to include as an additional insured the person(s) or organization(s) shown in the Schedule, but only with respect to liability for "bodily injury" or "property damage" caused, in whole or in part, by "your work" at the location designated and described in the Schedule of this endorsement performed for that additional insured and included in the "products-completed operations hazard".

However:

1. The insurance afforded to such additional insured only applies to the extent permitted by law; and
2. If coverage provided to the additional insured is required by a contract or agreement, the insurance afforded to such additional insured will not be broader than that which you are required by the contract or agreement to provide for such additional insured.

B. With respect to the insurance afforded to these additional insureds, the following is added to **Section III – Limits Of Insurance:**

If coverage provided to the additional insured is required by a contract or agreement, the most we will pay on behalf of the additional insured is the amount of insurance:

1. Required by the contract or agreement; or
2. Available under the applicable Limits of Insurance shown in the Declarations;

whichever is less.

This endorsement shall not increase the applicable Limits of Insurance shown in the Declarations.

© Insurance Services Office, Inc., 2012

THIS ENDORSEMENT CHANGES THE POLICY. PLEASE READ IT CAREFULLY.

ADDITIONAL INSURED – OWNERS, LESSEES OR CONTRACTORS – SCHEDULED PERSON OR ORGANIZATION

This endorsement modifies insurance provided under the following:

COMMERCIAL GENERAL LIABILITY COVERAGE PART

SCHEDULE

Name Of Additional Insured Person(s) Or Organization(s)	Location(s) Of Covered Operations
WHERE REQUIRED BY WRITTEN CONTRACT.	ALL JOBS/LOCATIONS WHERE REQUIRED BY WRITTEN CONTRACT
Information required to complete this Schedule, if not shown above, will be shown in the Declarations.	

A. **Section II – Who Is An Insured** is amended to include as an additional insured the person(s) or organization(s) shown in the Schedule, but only with respect to liability for "bodily injury", "property damage" or "personal and advertising injury" caused, in whole or in part, by:

1. Your acts or omissions; or
2. The acts or omissions of those acting on your behalf;

in the performance of your ongoing operations for the additional insured(s) at the location(s) designated above.

However:

1. The insurance afforded to such additional insured only applies to the extent permitted by law; and
2. If coverage provided to the additional insured is required by a contract or agreement, the insurance afforded to such additional insured will not be broader than that which you are required by the contract or agreement to provide for such additional insured.

B. With respect to the insurance afforded to these additional insureds, the following additional exclusions apply:

This insurance does not apply to "bodily injury" or "property damage" occurring after:

1. All work, including materials, parts or equipment furnished in connection with such work, on the project (other than service, maintenance or repairs) to be performed by or on behalf of the additional insured(s) at the location of the covered operations has been completed; or
2. That portion of "your work" out of which the injury or damage arises has been put to its intended use by any person or organization other than another contractor or subcontractor engaged in performing operations for a principal as a part of the same project.

© Insurance Services Office, Inc., 2012

C. With respect to the insurance afforded to these additional insureds, the following is added to **Section III – Limits Of Insurance:**

If coverage provided to the additional insured is required by a contract or agreement, the most we will pay on behalf of the additional insured is the amount of insurance:

1. Required by the contract or agreement; or
2. Available under the applicable Limits of Insurance shown in the Declarations;

whichever is less.

This endorsement shall not increase the applicable Limits of Insurance shown in the Declarations.

© Insurance Services Office, Inc., 2012

CONTRACT
(SECTION 10)

This AGREEMENT made and entered into between the County of Cook, party of the first part and hereinafter called County, and K-Five Construction Corporation, party of the second part and hereinafter called Contractor.

WITNESSETH:

That for and in consideration of the payments to be made by the said County as hereinafter provided, the said Contractor hereby covenants and agrees with the said County to do all the work and furnish all the labor, materials, machinery, apparatus, implements, tools, and other things necessary for the improvement of a section of the public highway known as Cook County Contract # **1523-14815, PAVEMENT PRESERVATION AND REHABILITATION PROJECT 2015 – SOUTH REBID**, said section known or to be known as Section:**14-PPRPS-01-PV** at the following locations

107th Street - 88th Avenue to Kean Avenue; 103rd Street - 88th Avenue to Kean Avenue
Plainfield Road - Willow Springs Rd to East Avenue
Kedzie Avenue - At Governors Highway
Kedzie Avenue - 183rd Street to 175th Street
Sauk Trail - Cicero Avenue to Governors Highway
Wolf Road - at 139th Street

located in **Various** townships on **Various** routes of the County of Cook, and State of Illinois, at his own cost and expense, free from all liens, claims, and charges whatsoever, and in a good substantial, thorough and workmanlike manner, and in strict and full accordance, conformity and compliance with all the terms and conditions of this contract and the requirements under it of the Superintendent of Department of Transportation and Highways of Cook County, Illinois, and under the direction and to the satisfaction of the said Superintendent of Department of Transportation and Highways.

It is expressly understood and agreed by and between said County and said Contractor that the Bid hereto attached and Notice to Contractors, Specifications, Plans, Maps, Blue Prints, and Drawings, on file in the Office of the Superintendent of Department of Transportation and Highways of Cook County, Illinois, and in the office of the Department of Transportation, Springfield, Illinois, copies of which are hereto attached, hereby are included in and made a part of this contract.

The Contractor shall not begin construction operations until the contract has been approved by the Board of Cook County Commissioners and fully executed by the County. Subsequent to contract execution, the Contractor will be notified by a notice-to-proceed letter from the Superintendent of Cook County Department of Transportation of Highways to commence operations on a specified date. The undersigned agrees to start construction operations on the date specified and to complete the proposed improvement in

full compliance with the contract on or before **August 1, 2016**. The contract period is November 4, 2015 through **August 31, 2018**.

The Superintendent of Cook County Department of Transportation and Highways shall at the end of each month make an estimate in writing, such as in his opinion shall be just and fair, of the amount of materials furnished, delivered, properly set in place and incorporated into the herein described improvement, and the amount of work properly done by said Contractor in the performance of the work hereunder and the value thereof under and according to the terms of this contract.

The first estimate shall cover the amount of work performed and the value of the materials properly set in place and incorporated into the herein described improvement since said Contractor commenced the performance of this contract, and each subsequent estimate, except the final one, shall be of the amount of work performed and the value of the materials properly set in place and incorporated into said improvement since the last preceding estimate was made.

Such estimates of amount and quality shall not be required to be made by strict measurement, but shall be sufficient if they are made approximately only, and each such estimate shall be submitted to the Board of County Commissioners of Cook County and upon approval by said Board of Commissioners said County shall pay to said Contractor ninety per cent (90%) of the amount stated in said estimates.

At least one week before each payment falls due, said Contractor shall submit to said Superintendent of Department of Transportation and Highways requisition for such payment, and, shall, if required, submit therewith an itemized statement of the quantities and cost and proportionate profit of work performed to the termination of the period to be covered by such payment, together with an affidavit setting forth that the items in said statement are true and just, that the services were rendered, that the articles or materials were furnished, that the sum claimed is due and unpaid, after allowing all just credits, that all labor, materials, apparatus, fixtures, and machinery furnished or used have been paid for, and if not, stating those not paid for, giving the amount due, to whom due, and for what due, attaching to said affidavit waivers of lien from those mentioned in said exceptions as having unpaid claims, and such affidavit shall contain such other matter as may be deemed necessary by the said Superintendent of Department of Transportation and Highways to protect said County in its payments, and any such statement shall not be binding upon said Superintendent of Department of Transportation and Highways.

There shall be deducted from the amount so determined for the first fifty (50) percent of the completed work a sum of ten (10) percent to be retained until after the completion of the entire work to the satisfaction of the County. After fifty (50) percent or more of the work is completed, the County may, at its discretion, certify the remaining partial payments without any further retention, provided that satisfactory progress is being made, and provided that the amount retained is not less than five (5) percent of the total adjusted contract price.

It is expressly agreed by the parties hereto that in the event any defects or imperfections in the materials or workmanship to be furnished by the Contractor herein appear within the period of one year from the date of completion of all the work mentioned herein and the acceptance thereof by said County,

the Contractor will, upon notice from the said Superintendent of Department of Transportation and Highways, (which notice may be given by letter mailed to said Contractor to the business address of the Contractor shown in the Proposal), repair and make good at his own cost any such defects or imperfections and replace any defective or imperfect materials or workmanship with other materials or workmanship satisfactory to said Superintendent of Department of Transportation and Highways, and furnish all such new materials and labor as may be necessary to do so; and in the event of the failure, refusal or delay of said Contractor to so make good, repair or replace said workmanship or materials, said County may do so or have same done by others, and said Contractor and the surety or sureties on his bond given for the faithful performance of this contract shall be liable to the County of Cook for all damages and expense occasioned by such failure, refusal or delay.

It is expressly and mutually covenanted and agreed that all of the Plans and Specifications hereinbefore mentioned and this Instrument together are the documents forming the contract between said County and said Contractor and are correlative, and whatever may be provided for and required by one of said documents shall be as binding as if provided for and required by two or more of them.

The Contractor expressly agrees that not less than the general prevailing rate of wages as found by The Board of County Commissioners for the County of Cook in accordance with the provisions of "An Act regulating wages of laborers, mechanics and other workmen employed under contracts for public works", Approved June 26, 1941, as amended, or such wage rates as may be determined by the court on appeal as in said Act provided, shall be paid to all laborers, workmen and mechanics performing work under this contract. The prevailing wage rates as found by the said Board of County Commissioners are on file in the office of the County Clerk for the County of Cook.

It is expressly understood and agreed that if the said Contractor shall fail, refuse or neglect to comply with said contract and Plans and Specifications or any provisions therein contained, or to proceed according to the terms of said contract and Plans and Specifications or any part thereof, in the manner and at the time as directed by the said Superintendent of Department of Transportation and Highways, then the said County shall have the right, and The Board of County Commissioners of Cook County is hereby given authority on behalf of the said County to declare this contract forfeited, and the said County may re-bid the whole or any part thereof upon such terms as it may see fit without prejudice to any of its rights herein.

It is expressly understood and agreed by the parties hereto that the Superintendent of Department of Transportation and Highways shall fix and determine the amount of damages to be paid to said County by the said Contractor by reason of the failure or refusal to perform this contract or comply with the provisions thereof as aforesaid, and the said Contractor hereby agrees to be held liable for the amount so fixed and determined and agrees to pay such amount; and the said County shall apply in payment of any such amount so fixed and determined any and all sums on hand or due and owing to said Contractor, and if there be not sufficient money on hand or due and owing to said Contractor to balance and pay said amount so fixed and determined, then, in such case, any amount remaining unpaid shall be a valid and subsisting claim against the said Contractor and the surety or sureties on his bond given for the faithful performance of this agreement.

CONTRACT
EXHIBIT A
SCHEDULING

It is understood that time is of the essence to the contract. The following project milestones will apply to this contract. Failure to meet milestone dates listed below will result in liquidated damages being applied in accordance with Article 108.09 of the Standard Specifications. An extension of time for each requirement may be granted in accordance with Section 108.08 of the Standard Specifications.

Milestone 1

Requirement: **Submittal of Paperwork** including Progress Schedule, Request of Approval of Subcontractors and Request for Approval of Suppliers.
Due Date: **TWO WEEKS FROM NOTICE TO PROCEED**

Milestone 2

Requirement: **Substantial Completion of Project and Pre-Final Inspection of the following locations**
Plainfield Road – Willow Springs to East Avenue
Due Date: **November 25, 2015**

Milestone 3

Requirement: **Substantial Completion of Project and Pre-Final Inspection of the following locations**
107th Street – 88th Avenue to Kean Avenue
103rd Street – 88th Avenue to Kean Avenue
Kedzie Avenue at Governor's Highway
Sauk Trail – Cicero Avenue to Governors Highway
Kedzie Avenue – 183rd Street to 175th Street
Wolf Road at 139th Street
Due Date: **August 1, 2016**

Milestone 4

Requirement: **Completion of All Punch List Work, Final Inspection and Acceptance**
Restrictions: Completion of all punch list work within 30 Calendar days from the Pre-Final inspection of each section of the contract
Due Date: **August 31, 2016**

Milestone 5

Requirement: **Return the Final Construction Report (Form 69)** with any changes indicated initialed and dated on the report and include any and all pertinent information to substantiate any changes
Restrictions: Return the Final Construction Report (Form 69) within 21 days of receipt
Due Date: **February 28, 2017**

Milestone 6

Requirement: **Submittal of All Required Closeout Paperwork** including but not limited to Contractor's Affidavit (BC 141), Affidavit of Subcontractors or Material Supplier (BC 151) for all subcontractors and suppliers utilized for this contract, D//M/WBE Payment Agreement (SBE 2115) for all minority subcontractors and all required missing documentation as indicated in the Final Construction Report (Form 69).

Due Date: **August 31, 2017**

Pavement Preservation and Rehabilitation Program 2015 - SOUTH REBID

Contractor: K-Five Construction Corporation

At Various Locations

SCHEDULE OF PRICES

Section No.: 14-PPRPS-01-PV

ITEM NO.	QUAN-TITIES	UNIT	PAY ITEM	UNIT COST	TOTAL COST
1	996	SQ. YD.	AGGREGATE BASE COURSE, TYPE B, 4 IN	$ 6.00	$ 5,976.00
2	50	SQ. YD.	AGGREGATE BASE COURSE, TYPE B, 8 IN	$ 10.00	$ 500.00
3	199	TON	AGGREGATE SHOULDERS, TYPE B	$ 65.00	$ 12,935.00
4	85,982	SQ. YD.	DIAMOND GRINDING CONCRETE PAVEMENT	$ 7.01	$ 602,733.82
5	5,273	SQ. YD.	SUBBASE GRANULAR MATERIAL, TYPE B, 6 IN	$ 8.00	$ 42,184.00
6	36,493	POUND	BITUMINOUS MATERIALS (PRIME COAT)	$ 0.01	$ 364.93
7	3,396	FOOT	CUTTING HOT-MIX ASPHALT SURFACE	$ 1.60	$ 5,433.60
8	2,647	TON	HOT-MIX ASPHALT BINDER COURSE, IL-19.0, N70	$ 80.00	$ 211,760.00
9	50	SQ. YD.	HOT-MIX ASPHALT DRIVEWAY SURFACE REMOVAL, 4"	$ 55.00	$ 2,750.00
10	26	TON	HOT-MIX ASPHALT SURFACE COURSE, MIX "C", IL-12.5 OR 9.5, N50	$ 185.00	$ 4,810.00
11	6,356	TON	HOT-MIX ASPHALT SURFACE COURSE, MIX "D", IL-9.5, N70	$ 90.00	$ 572,040.00
12	32,577	SQ. YD.	HOT-MIX ASPHALT SURFACE REMOVAL, 2 IN	$ 3.00	$ 97,731.00
13	1,117	SQ. YD.	HOT-MIX ASPHALT SURFACE REMOVAL, 2.5 IN	$ 3.00	$ 3,351.00
14	21,318	SQ. YD.	HOT-MIX ASPHALT SURFACE REMOVAL, 4 IN	$ 5.00	$ 106,590.00
15	38	SQ. YD.	HOT-MIX ASPHALT SHOULDERS, IL-19.0, N30, 12 IN	$ 120.00	$ 4,560.00
16	267	SQ. YD.	HOT-MIX ASPHALT SHOULDERS, IL-19.0, N30, 6 IN	$ 60.00	$ 16,020.00
17	470	TON	POLYMERIZED LEVELING BINDER (MACHINE METHOD), IL-4.75, N50	$ 120.00	$ 56,400.00
18	2,929	FOOT	TEMPORARY BUTT JOINTS	$ 15.00	$ 43,935.00
19	11	EACH	CATCH BASINS TO BE ADJUSTED	$ 350.00	$ 3,850.00
20	4,348	SQ. YD.	PAVEMENT FABRIC	$ 3.00	$ 13,044.00
21	6,791	SQ. FT.	PORTLAND CEMENT CONCRETE SIDEWALK, 5 IN	$ 6.00	$ 40,746.00
22	100	SQ. YD.	PORTLAND CEMENT CONCRETE DRIVEWAY PAVEMENT, 8 IN	$ 70.00	$ 7,000.00
23	2,943	SQ. YD.	PORTLAND CEMENT CONCRETE PAVEMENT, 10 IN	$ 80.00	$ 235,440.00
24	860	FOOT	COMBINATION CURB AND GUTTER REMOVAL	$ 7.00	$ 6,020.00
25	100	SQ. YD.	DRIVEWAY PAVEMENT REMOVAL	$ 15.00	$ 1,500.00
26	300	SQ. FT.	MEDIAN REMOVAL	$ 4.00	$ 1,200.00
27	2,943	SQ. YD.	PAVEMENT REMOVAL	$ 20.00	$ 58,860.00
28	1,091	SQ. FT.	SIDEWALK REMOVAL	$ 2.00	$ 2,182.00
29	100	FOOT	SAW CUTS	$ 1.58	$ 158.00

Contractor: K-Five Construction Corporation

SCHEDULE OF PRICES

Section No.: 14-PPRPS-01-PV

ITEM NO.	QUAN-TITIES	UNIT	PAY ITEM	UNIT COST	TOTAL COST
30	4,180	FOOT	DETECTOR LOOP, TYPE I	$ 16.80	$ 70,224.00
31	850	CU. YD.	EARTH EXCAVATION	$ 15.00	$ 12,750.00
32	1,346	FOOT	GRADING AND SHAPING DITCHES	$ 5.00	$ 6,730.00
33	22	EACH	FRAMES AND LIDS TO BE ADJUSTED	$ 400.00	$ 8,800.00
34	7	EACH	FRAMES AND LIDS TO BE ADJUSTED, SPECIAL	$ 950.00	$ 6,650.00
35	10	EACH	VALVE VAULTS TO BE RECONSTRUCTED	$ 750.00	$ 7,500.00
36	13	EACH	MANHOLES TO BE RECONSTRUCTED	$ 1,100.00	$ 14,300.00
37	1	EACH	CATCH BASINS TO BE RECONSTRUCTED	$ 1,100.00	$ 1,100.00
38	1	EACH	WATERPROOFING SANITARY FRAMES AND LIDS TO BE ADJUSTED, SPECIAL	$ 850.00	$ 850.00
39	9	POUND	NITROGEN FERTILIZER NUTRIENT	$ 20.00	$ 180.00
40	9	POUND	PHOSPHORUS FERTILIZER NUTRIENT	$ 20.00	$ 180.00
41	9	POUND	POTASSIUM FERTILIZER NUTRIENT	$ 20.00	$ 180.00
42	484	SQ. YD.	SODDING, SALT TOLERANT	$ 10.00	$ 4,840.00
43	5	UNIT	SUPPLEMENTAL WATERING	$ 46.00	$ 230.00
44	484	SQ. YD.	TOPSOIL FURNISH AND PLACE, 4 IN	$ 15.00	$ 7,260.00
45	43,019	SQ. FT.	ERADICATION OF EXISTING PAVEMENT MARKING	$ 1.25	$ 53,773.75
46	1,358	SQ. FT.	MODIFIED URETHANE PAVEMENT MARKING - LETTERS AND SYMBOLS	$ 6.75	$ 9,166.50
47	42,976	FOOT	MODIFIED URETHANE PAVEMENT MARKING, - LINE 4 IN	$ 0.50	$ 21,488.00
48	5,996	FOOT	MODIFIED URETHANE PAVEMENT MARKING - LINE 6 IN	$ 0.75	$ 4,497.00
49	50	FOOT	MODIFIED URETHANE PAVEMENT MARKING, - LINE 8 IN	$ 2.00	$ 100.00
50	1,139	FOOT	MODIFIED URETHANE PAVEMENT MARKING - LINE 12 IN	$ 3.25	$ 3,701.75
51	809	FOOT	MODIFIED URETHANE PAVEMENT MARKING - LINE 24 IN	$ 6.75	$ 5,460.75
52	1,285	SQ. FT.	THERMOPLASTIC PAVEMENT MARKING - LETTERS AND SYMBOLS	$ 4.00	$ 5,140.00
53	49,188	FOOT	THERMOPLASTIC PAVEMENT MARKING - LINE 4 IN	$ 0.56	$ 27,545.28
54	2,980	FOOT	THERMOPLASTIC PAVEMENT MARKING - LINE 6 IN	$ 0.84	$ 2,503.20
55	2,207	FOOT	THERMOPLASTIC PAVEMENT MARKING - LINE 8 IN	$ 1.12	$ 2,471.84
56	1,688	FOOT	THERMOPLASTIC PAVEMENT MARKING - LINE 12 IN	$ 1.68	$ 2,835.84
57	464	FOOT	THERMOPLASTIC PAVEMENT MARKING - LINE 24 IN	$ 4.00	$ 1,856.00
58	7,915	FOOT	PAVEMENT MARKING TAPE, TYPE III 6"	$ 1.00	$ 7,915.00

Contractor: K-Five Construction Corporation

SCHEDULE OF PRICES

Section No.: 14-PPRPS-01-PV

ITEM NO.	QUAN-TITIES	UNIT	PAY ITEM	UNIT COST	TOTAL COST
59	50	FOOT	COMBINATION CONCRETE CURB AND GUTTER, TYPE B-6.12	$ 30.00	$ 1,500.00
60	894	FOOT	COMBINATION CONCRETE CURB AND GUTTER, TYPE B-6.24	$ 35.00	$ 31,290.00
61	93	FOOT	COMBINATION CONCRETE CURB AND GUTTER, TYPE M-2.12	$ 30.00	$ 2,790.00
62	392	EACH	RAISED REFLECTIVE PAVEMENT MARKER	$ 27.00	$ 10,584.00
63	392	EACH	RAISED REFLECTIVE PAVEMENT MARKER REMOVAL	$ 15.75	$ 6,174.00
64	373	SQ. FT.	CONCRETE MEDIAN, TYPE C-4	$ 10.00	$ 3,730.00
65	205	SQ. YD.	CLASS B PATCHES, TYPE I, 10 IN	$ 110.00	$ 22,550.00
66	7,615	SQ. YD.	CLASS B PATCHES, TYPE II, 10 IN	$ 95.00	$ 723,425.00
67	490	SQ. YD.	CLASS B PATCHES, TYPE III, 10 IN	$ 92.00	$ 45,080.00
68	915	SQ. YD.	CLASS B PATCHES, TYPE IV, 10 IN	$ 92.00	$ 84,180.00
69	870	SQ. YD.	CLASS D PATCHES, TYPE III, 10 IN	$ 85.00	$ 73,950.00
70	1,285	SQ. YD.	CLASS D PATCHES, TYPE IV, 10 IN	$ 85.00	$ 109,225.00
71	93	SQ. YD.	PAVEMENT REPLACEMENT	$ 85.00	$ 7,905.00
72	2,719	POUND	CRACK FILLING	$ 3.85	$ 10,468.15
73	545	FOOT	CRACK ROUTING AND SEALING	$ 8.43	$ 4,594.35
74	4,700	FOOT	CRACK AND JOINT ROUTING AND SEALING	$ 2.62	$ 12,314.00
75	34	TON	MIXTURE FOR CRACKS, JOINTS AND FLANGEWAYS	$ 400.00	$ 13,600.00
76	2,750	SQ. FT.	DETECTABLE WARNINGS	$ 20.00	$ 55,000.00
77	14	EACH	MAINTENANCE OF EXISTING TRAFFIC SIGNAL INSTALLATION	$ 3,000.00	$ 42,000.00
78	3	EACH	CONSTRUCTING TEST STRIP	$ 3,000.00	$ 9,000.00
79	10	EACH	TRAFFIC BARRIER TERMINAL, TYPE 1, SPECIAL	$ 3,000.00	$ 30,000.00
80	11	EACH	SURVEY MONUMENTS	$ 3,000.00	$ 33,000.00
81	410	FOOT	CLEANING EXISTING PIPE CULVERTS	$ 21.95	$ 8,999.50
82	380	FOOT	GUARDRAIL REMOVAL	$ 9.50	$ 3,610.00
83	100	FOOT	STEEL PLATE BEAM GUARDRAIL, TYPE A	$ 49.00	$ 4,900.00
84	2	EACH	FLARED END SECTION TO BE REMOVED	$ 200.00	$ 400.00
85	2	EACH	FLARED END SECTION TO BE RELOCATED	$ 800.00	$ 1,600.00
86	100	FOOT	STORM SEWER REMOVAL, 15 IN.	$ 35.00	$ 3,500.00
87	100	FOOT	STORM SEWERS, TYPE 1 (RCCP CLASS IV) 15 IN.	$ 135.00	$ 13,500.00

Pavement Preservation and Rehabilitation Program 2015 - SOUTH REBID

Contractor: K-Five Construction Corporation

At Various Locations

SCHEDULE OF PRICES

Section No.: 14-PPRPS-01-PV

ITEM NO.	QUAN-TITIES	UNIT	PAY ITEM	UNIT COST	TOTAL COST
88	1	EACH	REMOVING MANHOLES	$ 500.00	$ 500.00
89	1	EACH	MANHOLES, TYPE A, 5 FT.DIA. WITH FRAMES AND LIDS	$ 7,500.00	$ 7,500.00
90	1	EACH	REMOVING CATCH BASINS	$ 200.00	$ 200.00
91	1	EACH	CATCH BASINS, TYPE A, 4 FT. DIA. WITH FRAMES AND GRATES	$ 5,500.00	$ 5,500.00
92	1	EACH	PLUGGING EXISTING DRAINS AND SEWERS (OVER 12 IN.)	$ 200.00	$ 200.00
93	1	L. SUM	CONSTRUCTION LAYOUT STAKES AND SURVEY CONTROL POINTS	$ 25,000.00	$ 25,000.00
94	1	L. SUM	TRAFFIC PROTECTION	$ 378,606.74	$ 378,606.74
95	1	L. SUM	MOBILIZATION	$ 1.00	$ 1.00
96	6	CAL. MO.	ENGINEER'S FIELD OFFICE, TYPE A	$ 3,500.00	$ 21,000.00
97	80,000	UNIT	CONTRACT EXTRA WORK	$ 1.00	$ 80,000.00
98	1	L. SUM	CRUSHED STONE (TEMPORARY USE)	$ 10,000.00	$ 10,000.00
99	6	EACH	REBUILD EXISTING HEAVY DUTY HANDHOLE	$ 2,200.00	$ 13,200.00
100	6	EACH	REBUILD EXISTING HANDHOLE	$ 2,020.00	$ 12,120.00
				TOTAL	$ 4,373,000.00

County of Cook
Department of Transportation and Highways

Proposal Bid Bond

Project Pavement Preservation and Rehabilitation Program 2015-South
Section 14-PPRPS-01-PV
Date August 14, 2015
Letting _____

We K-Five Construction Corporation
as Principal, and Continental Casualty Company
as Surely, are held and firmly bound unto the County of Cook a body politic and corporate of the state of Illinois herein after called the County in the penal sum of 5% of the total bid price, or for the amount specified in Article 102.09 of the "Standard Specifications for Road and Bridge Construction" in effect on the date of invitation for bids. We bind ourselves, our heirs, executors, administrators, successors, and assigns, jointly to pay to the County this sum under the conditions of this instrument.

WHEREAS THE CONDITION OF THE FOREGOING OBLIGATION IS SUCH that, the said PRINCIPAL is submitting a written proposal to the County acting through its awarding agency for the construction of the work designated as the above section.

THEREFORE, if the proposal is accepted and a contract awarded to the PRINCIPAL by the County for the above-designated section, and the PRINCIPAL shall within fifteen (15) days after award enter into a formal contract, furnish surely guaranteeing the faithful performance of the work, and furnish the required insurance coverage, all as provided in the Standard Specifications for Road and Bridge Construction" and applicable Supplemental Specifications, then this obligation shall become void; otherwise it shall remain in full force and effect.

IN THE EVENT the County determines the PRINCIPAL has failed to enter into a formal contract in compliance with any requirements set forth in the preceding paragraph, then the County acting through its awarding agency shall immediately be entitled to recover the full penal sum set out above, together with all court costs, all attorney fees, and any other expense of recovery.

IN TESTIMONY WHEREOF, the said PRINCIPAL and said SURETY have caused this instrument to be signed by their respective officers and their corporate seals to be hereunto affixed this 14th day of August A.D. 2015.

PRINCIPAL

K-Five Construction Corporation
(Company Name) (Seal)

BY: _____
(Signature & Title) Robert G. Krug President

(Company Name) (Seal)

BY: _____
(Signature & Title)

(If PRINCIPAL is a joint venture of two or more contractors, the company names, seals and authorized signatures of each contractor must be affixed.)

SURETY

Continental Casualty Company
(Name of Surely) (Seal)

BY: _____
(Signature of Attorney-in-fact)
Kimberly R. Holmes Attorney-in-Fact

CONTINENTAL CASUALTY COMPANY CORPORATE SEAL 1897

STATE OF Illinois
COUNTY OF Cook

I, Ann Marie Waters, a Notary Public in and for Cook County, do hereby certify that Robert G. Krug Kimberly R. Holmes

(Insert names of individuals signing on behalf of PRINCIPAL & SURETY)

Who are each personally known to me to be the same persons whose names are subscribed to the foregoing instrument on behalf of PRINCIPAL and SURETY, appeared before me this day in person and acknowledged respectively, that they signed, sealed, and delivered said instrument as their free and voluntary act for the uses and purposes therein set forth.

Given under my hand and notarial seal this 14th day of August A.D., 2015. My commission expires July 5, 2017

Notary Public Ann Marie Waters

OFFICIAL SEAL
ANN MARIE WATERS
NOTARY PUBLIC - STATE OF ILLINOIS
MY COMMISSION EXPIRES:07/05/17

*Improper execution of this form (i.e. Missing Signatures or Seals or incomplete certification) will result in bid being declared irregular.
** If Bid Bond is used in lieu of proposal guaranty check, it must be on this form and must be submitted with Bid.

BID DEPOSIT FORM

AS REQUIRED BY INSTRUCTION TO BIDDER OF/AND INCONJUNCTION WITH THE BID HEREWITH SUBMITTED

(THIS FORM MUST BE SUBMITTED WITH THE BID)

TO: COOK COUNTY DEPARTMENT OF TRANSPORTATION AND HIGHWAYS

BID FOR: K-FIVE Construction

BID OPENING DATE: 8-14-15

We deposit (subject to all condition of said proposal) the following described deposit check:

( ) Cashier's Check ( ) Bank Draft (X) Bid Bond ( ) Other

Drawn on: Continental Casualty Co. **of** Illinois

Bank City State

Draft or Check Number: Bid Bond **Date:** _____

Amount: $ 5%

Submitted by: K-FIVE Construction

Bidder

13769 Main St.

Street Address

Lemont IL 60439

City State Zip Code

DO NOT WRITE IN THE SPACES BELOW

The above described Deposit Check is:

( ) Held _____ Date _____
( ) Mailed _____ Date _____
( ) Delivered To _____ Date _____
( ) Bond Substituted _____ Date _____
( ) Bond Mailed To _____ Date _____