BIDDER: Affiliated Steam Equipment Company

CONTRACT FOR SUPPLY

DOCUMENT NO. 1445-14222

ISSUED BY THE OFFICE OF THE CHIEF PROCUREMENT OFFICER

SPRAY FLOW II INDUSTRIAL STEAM DEAERATOR
FOR
FACILITIES MANAGEMENT OF COOK COUNTY

BOARD OF COMMISSIONERS
COUNTY OF COOK
TONI PRECKWINKLE, PRESIDENT

BIDS TO BE EXECUTED IN TRIPLICATE
BID OPENING WILL BE ON DECEMBER 19, 2014 AT 10:00 A.M.
LATE BIDS WILL NOT BE CONSIDERED
DELIVER BIDS TO 118 N. CLARK ST., ROOM 1018, CHICAGO, IL 60602

CONTACT: DAN GIZZI, SPECIFICATION ENGINEER, AT (312) 603-6825
EMAIL: DAN.GIZZI@COOKCOUNTYIL.GOV

REQ # 115781

INSTRUCTIONS TO BIDDERS
BID CONTRACTS
INDEX

Section	Subject	Page
IB-01	Definitions	IB-1
IB-02	Preparation of Bid Proposals	IB-1
IB-03	Site Inspection Certificate	IB-1
IB-04	Bid Deposit	IB-2
IB-05	Exceptions	IB-2
IB-06	Bidder Warranties	IB-2
IB-07	Submission of Bid Proposals	IB-3
IB-08	Bid Proposals to Conform to Requirements of Legal Advertising	IB-3
IB-09	Competency of Bidder	IB-3
IB-10	Local Business Preference	IB-3
IB-11	Consideration of Bid Proposals	IB-3
IB-12	Withdrawal of Bid Proposals	IB-4
IB-13	Acceptance of Bid Proposals	IB-4
IB-14	Performance and Payment Bond	IB-4
IB-15	Prices Firm	IB-4
IB-16	Cash Billing Discounts	IB-4
IB-17	Catalogs	IB-4
IB-18	Authorized Dealer/Distributor	IB-4
IB-19	Trade Names	IB-5
IB-20	Samples	IB-5
IB-21	Notices	IB-5
IB-22	Compliance with Laws - Public Contracts	IB-5
IB-23	Cooperation with Inspector General	IB-5

INSTRUCTIONS TO BIDDERS

IB-01 DEFINITIONS

A. **BIDDER** shall mean the individual or business entity submitting a Bid Proposal to supply any or all of the services or goods required by the Contract Documents.

B. **BID PROPOSAL** shall mean the Contract Documents as completed by the Bidder which constitutes the Bidder's offer.

C. **CONTRACT** shall mean the agreement between the County and Contractor as set forth in the Contract Documents and as awarded by the Cook County Board of Commissioners.

D. **CONTRACT DOCUMENTS** shall mean collectively the Instructions to Bidders, General Conditions, Special Conditions, Specifications, Attachments, Addenda, if any, Bid Proposal, Site Inspection Certificate, Contractor Certifications and Forms for Minority Participation. The above documents shall be considered as one integrated document setting forth the obligations of the parties.

E. **CONTRACTOR** shall mean the individual or business entity submitting a Bid Proposal and to whom the Cook County Board of Commissioners awards the Contract.

F. **COUNTY** shall mean the County of Cook, a body politic and corporate of the State of Illinois.

G. **DIRECTOR** shall mean the person or persons authorized by the County to act in connection with this Contract. Such authorization shall not include any power to change the scope of the Contract or to obligate the County to pay additional sums beyond the amount of the Contract awarded by the Cook County Board of Commissioners.

H. **CHIEF PROCUREMENT OFFICER** shall mean the Chief Procurement Officer of the County of Cook whose duties and responsibilities are more particularly described in the Illinois Compiled Statutes 1994, 55 ILCS 5/5-36003.

I. **SPECIFICATIONS** shall mean the description of the required services, Contract Goods, equipment, personnel, volume and use statistics and all requirements for the scope of work set forth in the Contract Documents.

IB-02 PREPARATION OF PROPOSALS

The Bidder shall prepare one (1) copy of its Bid Proposal on the proposal forms within the Contract Documents and three (3) execution pages, all with original signatures in the back of the document. Unless otherwise stated, all blank spaces on the proposal forms shall be fully completed. Bidder bears all responsibility for error or omissions in the submission of the Bid Proposal.

IB-03 SITE INSPECTION CERTIFICATE

When required in the legal advertisement or the Special Conditions, the Bidder shall visit the job-site and shall carefully examine and become familiar with all conditions which may in any way affect the performance of the Contract and shall submit certification of such inspection along with the Bid Proposal. The dates and conditions of the site inspection are determined by County.

IB-04 BID DEPOSIT

When required in the legal advertisement, the Bid Proposal shall be accompanied by cash, cashier's check, certified check, bank draft or surety bond in the amount shown in the legal advertisement or as may be prescribed in these Contract Documents. A certified or cashier's check shall be drawn on a responsible bank doing business in the United States and shall be made payable to the order of the County of Cook. The Surety issuing the bond must have a general rating of "A", and shall be a Class VII or higher in the financial size category as defined by Best's Key Rating Guide - Property and Casualty. Failure to submit the bid deposit shall constitute an informal Bid Proposal and such Bid Proposal shall be rejected.

The Bidder hereby agrees that the bid deposit shall be forfeited to the County as liquidated damages and not as penalty in the event Bidder fails to comply with IB-11, IB-13, or otherwise fails or refuses to honor the Bid Proposal upon award of the Contract by the County.

The bid deposit of all bidders will be returned, with the exception of the Contractor, after the County has awarded the Contract. The bid deposit of the Contractor will be returned after the Contract has been awarded and the Contractor has submitted all insurance documentation and the Performance and Payment Bond, as required by the Contract Documents.

IB-05 EXCEPTIONS

If any Bidder intends to take any deviations or exceptions from the Specifications or other Contract Documents, Bidder shall submit to the Chief Procurement Officer a written request for a deviation or exception prior to the date and time of Bid Opening. If the Chief Procurement Officer considers such deviation or exception acceptable, the Chief Procurement Officer shall issue an Addendum setting forth such deviation or exception from the Specifications or other Contract Documents which shall be applicable to all Bidders submitting a Bid Proposal. If no Addendum is issued by the Chief Procurement Officer, then such deviation or exception shall be deemed rejected. The County may reject any Bid Proposal containing deviations or exceptions not previously accepted through a written Addendum. A copy of such Addendum will be mailed or delivered to each Bidder receiving a set of such Contract Documents. Bidder shall acknowledge receipt of each Addendum issued in the space provided on the proposal form. All written requests for deviations or exceptions shall be addressed to:

Chief Procurement Officer
Office of the Chief Procurement Officer
118 North Clark Street, Room 1018
Chicago, Illinois 60602
(Reference the Project Title and Contract Number)

IB-06 BIDDER WARRANTIES

The submission of a Bid Proposal shall constitute a warranty that: (i) Bidder has carefully and thoroughly reviewed the Contract Documents and has found them complete and free from ambiguities and sufficient to describe the Contract work; (ii) Bidder and all workmen and/or employees it intends to use in the performance of this Contract are skilled and experienced in the type of work or services called for by the Contract Documents; and (iii) neither the Bidder nor any of its employees, agents, suppliers or subcontractors have relied on any verbal representations from the County, or any of the County's employees, agents, or consultants, in preparing the Bid Proposal.

IB-07 SUBMISSION OF BID PROPOSALS

All Bidders shall submit the bound copy of the sealed Bid Proposal in an envelope and shall deposit them in the bid box located in the County Board Office of the Chief Procurement Officer, Room 1018, County Building, 118 North Clark Street, Chicago, Illinois 60602 by the date and hour for the Bid Opening as shown in the legal advertisement. The sealed envelope submitted by the Bidder shall carry the following information on the face of the envelope: Bidder's name, address, subject matter of Bid Proposal, advertised date of Bid Opening and the hour designated for Bid Opening as shown in the legal advertisement.

IB-08 BID PROPOSALS TO CONFORM TO REQUIREMENTS OF LEGAL ADVERTISING

COOK COUNTY ORDINANCE CHAPTER 34, ARTICLE IV, DIVISION 2, SECTION 34-151.

The County will not entertain or consider any Bid Proposals: (i) received after the exact time specified in the legal advertisements; (ii) not accompanied by the required bid deposit; or (iii) in any other way failing to comply fully with the conditions stated in the legal advertisement therefore.

IB-09 COMPETENCY OF BIDDER

No Bid Proposal will be accepted from or Contract awarded to a Bidder that is in arrears or is in default to the County upon any debt or Contract, or that is a defaulter, as surety or otherwise upon any obligation to said County, or has failed to perform faithfully any previous contract with the County.

IB-10 LOCAL BUSINESS PREFERENCE

COOK COUNTY ORDINANCE CHAPTER 34, ARTICLE IV, DIVISION 2, SECTION 34-151(p).

The Chief Procurement Officer shall, in the purchase of all supplies and services funded with County dollars by competitive sealed bidding, accept the lowest bid price or lowest evaluated bid price from a responsive or responsible local business, provided that the bid does not exceed the lowest bid price or lowest evaluated bid price from a responsive and responsible non-local business by more than five percent (5%).

"Local Business" shall mean a person authorized to transact business in this State and having a bona fide establishment for transacting business located within Cook County at which it was actually transacting business on the date when any competitive solicitation for a public contract is first advertised or announced and further which employs the majority of its regular, full time work force within Cook County, including a foreign corporation duly authorized to transact business in this State and which has a bona fide establishment for transacting business located within Cook County at which it was actually transacting business on the date when any competitive solicitation for a public contract is first advertised or announced and further which employs the majority of its regular, full time work force within Cook County.

IB-11 CONSIDERATION OF BID PROPOSALS

The County reserves the right to reject or accept any or all Bid Proposals, to extend the bidding period, to waive technicalities in the Contract Documents and/or to direct that the project be abandoned or rebid prior to award of the Contract.

After Bid Proposals are opened and read aloud, they will be evaluated based on the price, conformance with Specifications, the responsibility of the various Bidders taking into consideration factors including, but not limited to, those noted in IB-09, IB-10 and responsiveness to the County's Minority and Female Owned Business Ordinance.

IB-12 WITHDRAWAL OF BID PROPOSALS

Bidders may withdraw their Bid Proposals at any time prior to the time specified in the legal advertisement as the date and hour set for the Bid Opening. However, no Bidder shall withdraw, cancel or modify its Bid Proposal for a period of ninety (90) calendar days after said advertised Bid Opening.

IB-13 ACCEPTANCE OF PROPOSALS

The Chief Procurement Officer shall notify the successful Bidder, in writing, of award of the Contract by the County within ninety (90) days from the Bid Opening date. Upon receipt of the Notice of Award, the Contractor shall promptly secure, execute and deliver to the Chief Procurement Officer any documents required herein.

IB-14 PERFORMANCE AND PAYMENT BOND

When required in the legal advertisement or Special Conditions, the successful Bidder shall furnish a Performance and Payment Bond in the full amount of the Contract on the County Form, a specimen of which is provided herein. The Surety issuing the Performance and Payment Bond must have a general rating of "A" and shall be a Class VII or higher in the financial size category as defined by Best's Key Rating Guide-Property and Casualty.

In the event that the Bidder fails to furnish the Performance and Payment Bond within fourteen (14) calendar days after service of the Notice of Award, the County may elect to retain Bidder's bid deposit as liquidated damages and not as a penalty and the Contract may be terminated. The parties agree that the sum of the bid deposit is a fair estimate of the amount of damages that the County will sustain due to the Bidder's failure to furnish the Performance and Payment Bond and the termination of the Contract.

IB-15 PRICES FIRM

All prices quoted in the Bid Proposal shall be firm and will not be subject to increase during the term of the Contract awarded to the Contractor, except as otherwise provided in these Contract Documents.

IB-16 CASH BILLING DISCOUNTS

Cash billing or percentage discounts for payment will not be considered in evaluating Bid Proposals.

IB-17 CATALOGS

Each Bidder shall submit in TRIPLICATE, where necessary or when requested catalogs, descriptive literature, and detailed drawings, fully detailing features, designs, construction, appointment and finishes not covered in the Specifications but necessary to fully describe the materials, Contract Goods or work proposed to be furnished.

IB-18 AUTHORIZED DEALER/DISTRIBUTOR

The Bidder must be: (i) the manufacturer; (ii) an authorized dealer/distributor; or (iii) able to promptly secure the necessary genuine parts, assemblies and/or accessories as supplied by the original equipment manufacturer (O.E.M.), along with any necessary schematics or drawings to fulfill the contractual obligations. Further, the Bidder must be able to furnish original product warranty and manufacturer's related services such as product information, product re-call notices, etc. Proof of ability to transfer product warranty to the County is to be submitted with the Bid Proposal.

IB-19 TRADE NAMES

In cases where an item is identified by a manufacturer's name, trade name, catalog number, or reference, it is understood that the Bidder proposes to furnish the item identified and does not propose to furnish an "equal" unless the proposed "equal" is definitely indicated therein by the Bidder. The County reserves the right to review and award alternate Contracts, if the commodity and/or service is suitable to its requirement.

The reference to the above catalog is intended to be descriptive and not restrictive and to indicate to the prospective Bidder articles that shall be satisfactory. Bid Proposals on other makes and catalogs shall be considered, provided each Bidder states on the face of the Bid Proposal exactly what is being proposed to be furnished or forwards with the Bid Proposal an illustration, or other descriptive matter which shall clearly indicate the character of the article covered by the Bid Proposal.

The County reserves the right to approve as an equal, or to reject as not being an equal, any article the Bidder proposes to furnish which contains major or minor variations from Specifications but which may comply substantially.

IB-20 SAMPLES

Bidders may be asked upon request of the Chief Procurement Officer or the Director to furnish and deliver a representative sample sufficient to effectively evaluate each item listed in the Bid Proposal. All samples must be delivered F.O.B. DESTINATION, FREIGHT PREPAID to an identified delivery location within five (5) business days of the request. Samples submitted must be identical to those specified in the Bid Proposal. Submission of other than the samples reflected in the Bid Proposal or failure to furnish samples within the required time period shall be cause for rejection of the Bid Proposal. All samples are subject to mutilation and will not be returned. Bidders shall bear the cost of any samples and shipping or delivery costs related thereto.

IB-21 NOTICES

All communications and notices between the County and Bidders regarding the Contract Documents shall be in writing and hand delivered or delivered via first class United States mail, postage prepaid. Notices to the Bidders shall be addressed to the name and address provided by the Bidders; notices to the Chief Procurement Officer shall be addressed to Room 1018, County Building, 118 North Clark Street, Chicago, Illinois 60602.

IB-22 COMPLIANCE WITH LAWS - PUBLIC CONTRACTS

This Contract is a competitively bid public contract of Cook County government subject to laws and ordinances governing public contracts. The Bidder shall at all times observe and comply with all laws, ordinances, regulations and codes of the Federal, State, County and other local government agencies which may in any manner effect the preparation of the Bid Proposal or the performance of the Contract. If the Bidder observes that any of the Contract Documents are at variance therewith, it shall promptly notify the Chief Procurement Officer in writing and necessary changes shall be effected by appropriate modification.

IB-23 COOPERATION WITH INSPECTOR GENERAL

Persons or businesses seeking County contracts are required to abide by all of the applicable provisions of the Office of the Independent Inspector General Ordinance (Section 2-281 et. seq. of the Cook County Code of Ordinances). Failure to cooperate as required may result in monetary and/or other penalties.

END OF SECTION

GENERAL CONDITIONS
BID CONTRACTS
INDEX

Section	Subject	Page
GC-01	Subcontracting or Assignment of Contract or Contract Funds	GC-1
GC-02	Indemnification	GC-1
GC-03	Inspection and Responsibility	GC-1
GC-04	Payment	GC-1
GC-05	Prepaid Fees	GC-1
GC-06	Taxes	GC-2
GC-07	Price Reduction	GC-2
GC-08	Contractor Credits	GC-2
GC-09	Disputes	GC-2
GC-10	Modifications and Amendments	GC-2
GC-11	Default	GC-3
GC-12	County's Remedies	GC-3
GC-13	Contractor's Remedies	GC-3
GC-14	Delays	GC-3
GC-15	Insurance Requirements	GC-4/6
GC-16	Patents, Copyrights and Licenses	GC-6
GC-17	Compliance with Laws	GC-6
GC-18	Delivery	GC-6
GC-19	MBE/WBE Cook County Ordinance	GC-7/10
GC-20	Material Safety Data Sheet	GC-10
GC-21	Conduct of the Contractor	GC-10
GC-22	Accident Reports	GC-11
GC-23	Use of Premises	GC-11
GC-24	General Notice	GC-11
GC-25	Termination for Convenience	GC-11

GENERAL CONDITIONS
BID CONTRACTS
INDEX

Section	Subject	Page
GC-26	Guarantees and Warranties	GC-11
GC-27	Standard of Contract Goods	GC-12
GC-28	Confidentiality And Ownership Of Documents	GC-12
GC-29	Quantities	GC-12
GC-30	Audit; Examination of Records	GC-12
GC-31	Governing Law	GC-13
GC-32	Cooperation with Inspector General	GC-13
GC-33	Waiver	GC-13
GC-34	Entire Agreement	GC-13
GC-35	Force Majeure	GC-13
GC-36	Governmental Joint Purchasing Agreement	GC-13
GC-37	Cooperative Purchasing	GC-13
GC-38	Federal Clauses	GC-14/21
GC-39	Contract Interpretation	GC-22

GENERAL CONDITIONS

GC-01 SUBCONTRACTING OR ASSIGNMENT OF CONTRACT OR CONTRACT FUNDS

Once awarded, this Contract shall not be subcontracted or any part thereof assigned without the express written approval of the County Chief Procurement Officer ("Chief Procurement Officer"). In no case, however, shall such approval relieve the Contractor from his obligations or change the terms of the Contract. The Contractor shall not transfer or assign any Contract funds or claims due or to become due without the advance written approval of the Chief Procurement Officer. The unauthorized subcontracting or assignment of the Contract, in whole or in part, or the unauthorized transfer or assignment of any Contract funds, either in whole or in part, or any interest therein, which shall be due or are to become due the Contractor shall have no effect on the County and are null and void.

The Contractor shall identify any and all contractors and subcontractors it intends to use in the performance of the Contract. All such persons shall be subject to the prior approval of the County.

The Contractor and its employees, contractors, subcontractors, agents and representatives are, for all purposed arising out of this Contract, independent contractors and are not employees of the County. It is expressly understood and agreed that the Contractor and its employees, contractors, subcontractors, agents and representatives shall in no event as a result of a contract be entitled to any benefit to which County employees are entitled, including, but not limited to, overtime, retirement benefits, worker's compensation benefits and injury leave or other leave benefits.

GC-02 INDEMNIFICATION

The Contractor covenants and agrees to indemnify and save harmless the County and its commissioners, officials, employees, agents and representatives, and their respective heirs, successors and assigns, from and against any and all costs, expenses, attorney's fees, losses, damages and liabilities incurred or suffered directly or indirectly from or attributable to any claims arising out of or incident to the performance or nonperformance of the Contract by the Contractor, or the acts or omissions of the officers, agents, employees, contractors, subcontractors, licensees or invitees of the Contractor. The Contractor expressly understands and agrees that any Performance Bond or insurance protection required of the Contractor, or otherwise provided by the Contractor, shall in no way limit the responsibility to indemnify the County as hereinabove provided.

GC-03 INSPECTION AND RESPONSIBILITY

The County shall have a right to inspect any Contract Goods used in carrying out this Contract and shall be responsible for the quality and standards of all materials or completed work furnished under this Contract. Contract Goods or completed work not complying herewith may be rejected by the Chief Procurement Officer and/or the Director and shall be replaced and/or re-performed by the Contractor at no cost to the County. Any Contract Goods rejected shall be removed within a reasonable time from the premises of the County at the entire expense of the Contractor, after notice has been given by the County to the Contractor that such Contract Goods have been rejected.

GC-04 PAYMENT

All invoices submitted by the Contractor shall be in accordance with the cost provisions contained in the Contract Documents. No payments shall be made without such invoices having been submitted along with a County Voucher Form.

GC-05 PREPAID FEES

In the event this Contract is terminated by either party, for cause or otherwise, and the County has prepaid for any service or Contract Good to be provided pursuant to this Contract, Contractor shall refund to the County, on a prorated basis to the effective date of termination, all amounts prepaid for such service or Contract Good not actually provided as a result of the termination. The refund shall be made within fourteen (14) days of the effective date of termination.

GC-06 TAXES

Federal Excise Tax does not apply to materials purchased by the County by virtue of Exemption Certificate No. 36-75-0038K. Illinois Retailers' Occupation Tax, Use Tax and Municipal Retailers' Occupation Tax do not apply to materials or services purchased by the County by virtue of statute. The price or prices quoted herein shall include any and all other federal and/or state, direct and/or indirect taxes which apply to this Contract. The County's State of Illinois Sales Tax Exemption Identification No. is E-9998-2013-05.

GC-07 PRICE REDUCTION

If at any time after the contract award, Contractor makes a general price reduction in the price of any goods covered by the Contract, the equivalent price reduction based on similar quantities and/or considerations shall apply to this Contract for the duration of the Contract period. Such price reductions shall be effective at the same time and in the same manner as the reduction in the price to customers generally.

GC-08 CONTRACTOR CREDITS

To the extent the Contractor gives credits toward future purchases of goods or services, financial incentives, discounts, value points or other benefits based on the purchase of the materials or services provided for under this Contract, such credits belong to the County and not any specific using department. Contractor shall report any such credits to the Chief Procurement Officer.

GC-09 DISPUTES

Any dispute arising under the Contract between the County and Contractor shall be decided by the Chief Procurement Officer. The complaining party shall submit a written statement detailing the dispute and specifying the specific relevant Contract provision(s) to the Chief Procurement Officer. Upon request of the Chief Procurement Officer, the party complained against shall respond to the complaint in writing within five days of such request. The Chief Procurement Officer will reduce his decision to writing and mail or otherwise furnish a copy thereof to the Contractor and Director. Dispute resolution as provided herein shall be a condition precedent to any other action at law or in equity. Notwithstanding a dispute, Contractor shall continue to discharge all its obligations, duties and responsibilities set forth in the Contract during any dispute resolution proceeding unless otherwise agreed to by the County in writing.

GC-10 MODIFICATIONS AND AMENDMENTS

The parties may during the term of the Contract make modifications and amendments to the Contract but only as provided in this section. Such modifications and amendments shall only be made by mutual agreement in writing.

In the case of Contracts not approved by the Board, the Chief Procurement Officer may amend a contract provided that any such amendment does not extend the Contract by more than one (1) year, and further provided that the total cost of all such amendments does not increase the total amount of the Contract beyond $150,000. Such action may only be made with the advance written approval of the Chief Procurement Officer. If the amendment extends the Contract beyond one (1) year or increases the total award amount beyond $150,000, then Board approval will be required.

No County department or employee thereof has authority to make any modifications or amendments to this Contract. Any modifications or amendments to this Contract made without the express written approval of the Chief Procurement Officer is void and unenforceable.

Contractor is hereby notified that, except for modifications and amendments which are made in accordance with this GC-10, Modifications and Amendments, no County department or employee thereof has authority to make any modification or amendment to this Contract.

GC-11 DEFAULT

Contractor shall be in default hereunder in the event of a material breach by Contractor of any term or condition of this Contract where Contractor has failed to cure such breach within ten (10) days after written notice of breach is given to Contractor by the County, setting forth the nature of such breach.

A material breach of the contract by the Contractor includes but is not limited to the following:

1. Failure to begin performance under this Contract within the specified time;
2. Failure to perform under this Contract with sufficient personnel, equipment, or materials to ensure completion of said performance within the specified time or failure to assign qualified personnel to ensure completion within the specified time;
3. Performance of this contract in an unsatisfactory manner;
4. Refusal to perform services deemed to be defective or unsuitable;
5. Discontinuance of performance of Contractor's obligations under the Contract or the impairment or the reasonable progress of performance;
6. Becoming insolvent, being declared bankrupt or committing any act of bankruptcy or insolvency;
7. Any assignment of this contract for the benefit of creditors;
8. Any cause whatsoever which impairs performance in an acceptable manner; or
9. Any other material breach of any term or condition of this Contract.

County shall be in default hereunder if any material breach of the Contract by the County occurs which is not cured by the County within forty-five (45) days after written notice of breach has been given by Contractor to the County, setting forth the nature of such breach.

GC-12 COUNTY'S REMEDIES

If the Contractor fails to remedy a material breach during the ten (10) day cure period pursuant to General Condition GC-11, Default, the County shall have the right to terminate this Contract provided, however, that the County shall give Contractor prior written notice of its intent to terminate. Following notice of breach to Contractor, the County reserves the right to withhold payments owed to Contractor until such time as Contractor has cured the breach which is the subject matter of the notice. In addition, the County shall have the right to pursue all remedies in law or equity.

GC-13 CONTRACTOR'S REMEDIES

If the County has been notified of breach and fails to remedy the breach during the forty-five (45) day cure period pursuant to General Condition GC-11, Default, the Contractor shall have the right to terminate this Contract providing, however, that Contractor shall give the County thirty (30) days prior written notice of termination.

Contractor shall have the right to pursue all remedies available in law or equity. In all cases the Contractor's damages shall be those provable damages not to exceed the value of the Contract as awarded by the Cook County Board of Commissioners. Contractor shall not disrupt the operation or repossess any component thereof.

GC-14 DELAYS

Contractor agrees that no charges or claims for damages shall be made by Contractor for any delays or hindrances from any cause whatsoever during the progress of any portion of this Contract.

GC-15 INSURANCE REQUIREMENTS

1) The Contractor shall require all policies of insurance that are in any way related to the work and are secured and maintained by Contractor and all tiers of subcontractors to include clauses providing that each underwriter shall waive all of its rights of recovery, under subrogation or otherwise, against Cook County, Board of Commissioners and employees of the County.

2) The Contractor shall waive all rights of recovery against Cook County, Board of Commissioners, employees of the County and other Contractors and subcontractors which Contractor may have or acquired because of deductible clauses in or inadequacy of limits of any policies of insurance that are in any way related to the work and that are secured and maintained by Contractor.

3) The Contractor shall require all tiers of subcontractors to waive the rights of recovery against Cook County and all tiers of subcontractors.

Insurance Requirements of the Contractor

Prior to the effective date of this Contract, the Contractor, at its cost, shall secure and maintain at all times, unless specified otherwise, until completion of the term of this Contract the insurance specified below.

Nothing contained in these insurance requirements is to be construed as limiting the extent of the Contractor's responsibility for payment of damages resulting from its operations under this Contract. The insurance purchased and maintained by the Contractor shall be primary and not excess or pro rata to any other insurance issued to the County.

The Contractor's insurance shall apply separately to each insured against whom claim is made or suit is brought, except with respect to the limits of the insurer's liability.

The limits of liability shall be as stated below, unless, prior to the effective date of this Contract, written approval is granted by the Cook County Department of Risk Management for variance from those limits.

1. Coverages

(a) **Workers Compensation Insurance**

Workers' Compensation shall be in accordance with the laws of the State of Illinois or any other applicable jurisdiction.

The Workers Compensation policy shall also include the following provisions:

(1) Employers' Liability coverage with a limit of

$500,000 each Accident
$500,000 each Employee
$500,000 Policy Limit for Disease

(2) Broad form all states coverage

GC-15 INSURANCE REQUIREMENTS (CON'T.)

(b) **Commercial General Liability Insurance**

(1) The Commercial General Liability shall be on an occurrence form basis to cover bodily injury and property damage including loss of use.

General Liability limits shall not be less than $1,000,000 per occurrence and $2,000,000 aggregate combined single limit for bodily injury and property damage. The General Liability policy shall include, without limitation the following coverages:

(a) All premises and operations;

(b) Broad Form Blanket Contractual Liability;

(c) Products/Completed Operations;

(d) Broad Form Property Damage Liability;

(e) Cross Liability.

(c) **Comprehensive Automobile Liability Insurance**

Comprehensive Automobile Liability to cover all owned, non-owned and hired automobiles, trucks and trailers. The Comprehensive Automobile Liability limits shall not be less than the following:

1) Liability - All Autos: Bodily Injury & Property Damage - $1,000,000 per Occurrence

2) Uninsured/Motorists: Per Illinois Requirements

(d) **Umbrella/Excess Liability Insurance**

In addition to the coverages and limits specified above, Contractor and Sub-Contractors of any tier shall secure and maintain a limit of liability no less than:

1) $2,000,000 each occurrence for all liability

2) $2,000,000 in the aggregate per policy year separately with respect to products and completed operations

2. Additional requirements

(a) Additional Insured

Cook County, its officials, employees and agents shall be named as additional insureds under the Commercial General Liability policy.

(b) Qualification of Insurers

All insurance companies providing coverage shall be licensed or approved by the Department of Insurance, State of Illinois, and shall have a financial rating no lower than (A-) VII as listed in A.M. Best's Key Rating Guide, current edition or interim report. Companies with ratings lower than (A-) VII will be acceptable only upon written consent of the Cook County Department of Risk Management.

GC-15 INSURANCE REQUIREMENTS (CON'T.)

(c) Insurance Notices

All policies of insurance which may be required under terms of this Contract shall be endorsed to provide that the insurance company shall notify the Cook County Office of the Chief Procurement Officer, 118 North Clark Street, Room 1018, Chicago, Illinois 60602 at least 30 days prior to the effective date of any cancellation or modification of such policies. Prior to the date on which Contractor commences performance of its part of the work, Contractor shall furnish to the County certificates of insurance maintained by Contractor.

In no event shall any failure of the County to receive Certificates of Insurance required hereof or to demand receipt of such Certificates of Insurance be construed as a waiver of Contractor's obligations to obtain insurance pursuant to these insurance requirements.

GC-16 PATENTS, COPYRIGHTS AND LICENSES

Contractor agrees to hold harmless and indemnify the County, its officers, agents, employees and affiliates from and defend, at its own expense (including reasonable attorneys', accountants' and consultants' fees), any suit or proceeding brought against County based upon a claim that the ownership and/or use of equipment, hardware and software or any part thereof utilized in performing Contractor's services constitutes an infringement of any patent, copyright or license or any other intellectual property right.

In the event the use of any equipment, hardware or software or any part thereof is enjoined, Contractor with all reasonable speed and due diligence shall provide or otherwise secure for County, at the Contractor's election, one of the following: the right to continue use of the equipment, hardware or software; an equivalent system having the Specifications as provided in this Contract; or to modify the system or its component parts so that it becomes non-infringing while performing in a substantially similar manner to the original system, meeting the Specifications of this Contract.

GC-17 COMPLIANCE WITH LAWS

The Contractor shall observe and comply with the laws, ordinances, regulations and codes of the Federal, State, County and other local government agencies which may in any manner affect the performance of the Contract, including but not limited to those County Ordinances set forth in the Certifications attached hereto and incorporated herein. Assurance of compliance with this requirement by the Contractor's employees, agents or subcontractors shall be the responsibility of the Contractor.

The Contractor shall secure and pay for all federal, state and local licenses, permits and fees required hereunder.

GC-18 DELIVERY

All Contract Goods shipped to the County shall be shipped F.O.B., DESTINATION, FREIGHT PREPAID. Arrangements shall be made in advance by the Contractor in order that the County may arrange for receipt of the materials.

Truck deliveries will be accepted before 3:00 P.M. on weekdays only. No deliveries will be accepted on Saturdays, Sundays or County Holidays. The County is not responsible for delivery delays due to waiting times for loading and unloading at dock locations.

The quantity of Contract Goods delivered by truck will be ascertained from a weight certificate issued by a duly licensed Public Weight-Master. In the case of delivery by rail, weight will be ascertained from bill of lading from originating line, but the County reserves the right to re-weigh at the nearest available railroad scale.

The County reserves the right to add new delivery locations or delete previously listed delivery locations as required during the Contract period. The only restriction regarding the County's right to add new delivery locations shall be that any new or additional location shall be within the geographical boundaries of the County of Cook.

GC-19 MINORITY AND WOMEN BUSINESS ENTERPRISES

COOK COUNTY ORDINANCE CHAPTER 34, DIVISION 6, SECTION 34-275 to SECTION 34-303

I. POLICY AND GOALS

A. It is the policy of the County of Cook to prevent discrimination in the award of or participation in County contracts and to eliminate arbitrary barriers for participation, as both prime and sub-contractors, in such contracts by local businesses certified as Minority Business Enterprises (MBE) and Women-owned Business Enterprises (WBE). In furtherance of this policy, the Cook County Board of Commissioners has adopted a Minority- and Women-owned Business Enterprise Ordinance (the "Ordinance") which establishes a goal of awarding not less than twenty-five percent (25%) of the annual total dollar amount of contracts to certified MBEs and ten percent (10%) of the annual dollar value of all such contracts to certified WBEs.

B. **The County may set contract-specific goals for each contract, based on the commodities or services specified in this bid document. The MBE/WBE percentages required for this contract are stated in the Special Conditions.** A Bid or Quotation shall be rejected if the County determines that a Bid or Quotation fails to comply with this General Condition, including but not limited to, commitments to achieve for this contract, the MBE/ WBE goals of the contract amount or to include a Petition for Reduction/Waiver documenting why the goals are not attainable despite the contractor's Good Faith Efforts. A Bid or Quotation may be rejected and a new Bid or Quotation may be solicited if the public interest is served thereby. Unless otherwise specified in the Bid or Quotation Documents, for purposes of this GC-19, the contract amount is the amount that has been entered on the Proposal page of the Bid or Quotation Documents.

C. Except to the extent that a Bid or Quotation includes a Reduction/Waiver request, the contract MBE and WBE participation goals may be achieved by the Bid or Quotation entities' status as a MBE or WBE; by entering into a joint venture with one or more MBEs and/or WBEs; by subcontracting a portion of the work to one or more MBEs and WBEs; by establishing and carrying out a mentor/protégé agreement; by the Indirect Participation of one or more MBEs and WBEs used by the entity submitting a Bid or Quotation in other aspects of its business; or by any combination of the foregoing so long as the Utilization Plan evidences a commitment to the MBE and WBE contract goals set forth in (B) above.

D. The same Business Enterprise, whether as a contractor, subcontractor or supplier, cannot be utilized as both a MBE and a WBE on the same contract.

E. To the extent that the Ordinance does not apply to this Bid or Quotation, unless specifically waived in the Bid or Quotation Documents, this GC-19 and the wording of the Ordinance shall apply. If there is a conflict between this GC-19 and the Ordinance or the wording of the Ordinance, the Ordinance or its wording controls.

F. A Contractor's failure to carry out its commitments in the course of the Contract's performance shall constitute a material breach of the Contract and if such breach is not appropriately cured, may result in the termination of the Contract or such remedy authorized by the Ordinance as the County deems appropriate.

GC-19 MINORITY AND WOMEN BUSINESS ENTERPRISES

COOK COUNTY ORDINANCE CHAPTER 34, DIVISION 6, SECTION 34-275 to SECTION 34-303

II. REQUIRED BID OR QUOTATION SUBMITTALS

To be considered responsive, a Bid or Quotation shall meet the MBE and WBE goals by submitting a Utilization Plan with the Bid or Quotation, which shall be (1) supported by Letters of Intent from the MBEs and WBEs together with the MBEs/WBEs Letters of Certification, and/or (2) include a written Petition for Reduction/Waiver with the Bid or Quotation supported by documentation of Good Faith Efforts to meet the goals. Failure to submit the documents set forth in (A) and (B) of this Section II in accordance with these guidelines will cause the Bid or Quotation to be considered non-responsive and shall be cause to reject the Bid or Quotation.

A. MBE/WBE Utilization Plan

Each Bid or Quotation shall include with the Bid or Quotation a complete Utilization Plan. The Utilization Plan shall list the names, mail and email addresses, telephone number and contact persons of businesses intended to be used as MBEs and WBEs on the Contract. If the entity submitting a Bid or Quotation, or any of its subcontractors, suppliers or consultants, are certified MBEs or WBEs they shall be identified as an MBE or WBE within the Utilization Plan.

1. Letter(s) of Intent

Except as set forth below, a Bid or Quotation shall include with its Utilization Plan, Letter(s) of Intent executed by each MBE and WBE included in the Utilization Plan and by the entity submitting the Bid or Quotation, which sets forth that each MBE and WBE intends to perform as a subcontractor, supplier, joint venture partner and/or consultant on the contract. The Letters of Intent must accurately detail the work to be performed by the MBE or WBE firm and the agreed rates and/or prices to be paid.

If the Bid or Quotation does not include all Letter(s) of Intent with its Utilization Plan, such Letter(s) of Intent may be submitted to the Office of Contract Compliance within three (3) business days after the date of the Bid or Quotation Opening. Failure to submit all Letter(s) of Intent as required shall result in the Contract Compliance Administrator's determination that a Bid or Quotation is not responsive and shall be cause to reject the Bid or Quotation.

All commitments made by a Bid or Quotation in its Utilization Plan must conform to those included in the submitted Letter(s) of Intent. The Contract Compliance Administrator reserves the right to request supplemental information regarding the Letter(s) of Intent submitted with a Bid or Quotation and such information shall be furnished. (Reference pages EDS-2 for a format sample of a Letter of Intent)

2. Letter(s) of Certification

Only a Letter of Certification from one of the following entities shall be accepted as certification of MBE/WBE status:

County of Cook
Small Business Administration 8A Program
Illinois Unified Certification Program

or any other governmental body or agency approved by the Contract Compliance Administrator as applying certification standards substantially similar to those applied by the County of Cook may also be accepted.

The Contract Compliance Administrator retains the right to reject the certification of any MBE or WBE on the ground that it does not meet the County's definition of a MBE or WBE.

GC-19 MINORITY AND WOMEN BUSINESS ENTERPRISES

COOK COUNTY ORDINANCE CHAPTER 34, DIVISION 6, SECTION 34-275 to SECTION 34-303

3. Joint Venture Affidavit

In the event a Bid or Quotation achieves MBE and/or WBE participation by entering into a Joint Venture, the Bid or Quotation shall include the required Joint Venture Affidavit which is available in the Office of Contract Compliance. Such Joint Venture Affidavit shall be submitted with the Bid or Quotation along with Letter(s) of Certification.

B. Reduction/Waiver Petition

In the event a Bid or Quotation is unable to meet the applicable contract MBE and WBE participation goals, the Bid or Quotation must include a Petition for Reduction/Waiver and submit the Petition with its Bid or Quotation. The Petition for Reduction/Waiver shall be supported with evidence and sufficient documentation to demonstrate the Bid's or Quotation's Good Faith Efforts in attempting to achieve the applicable MBE and WBE goals. If a Bid or Quotation does not include all documentation in support of the Petition with its Bid or Quotation, such documentation must be submitted to the Office of Contract Compliance within three (3) business days after the date of the Bid or Quotation opening.

III. REDUCTION/WAIVER OF MBE/MBE GOALS

A. Granting a Reduction/Waiver Request.

1. The determination of the adequacy of the Good Faith Efforts to utilize MBEs and WBEs in a Bid or Quotation will be evaluated on the basis of the actions in attempting to achieve MBE and WBE participation goals set forth in the Bid or Quotation. Examples of actions constituting Good Faith Efforts for a Bid or Quotation are set forth within the Ordinance and in the "Petition for Reduction/Waiver of MBE/WBE Participation Goals" contained in the Bid or Quotation Documents.

2. The Contract Compliance Administrator may grant the Petition for Reduction/Waiver based upon the following criteria: (a) sufficient qualified MBEs and WBEs capable of providing the goods or services required by the contract are unavailable despite the good faith efforts of the contractor; (b) the specifications and the reasonable and necessary requirements for performing the contract make it impossible or economically infeasible to divide the contract into sufficiently small tasks or quantities to enable the contractor to utilize MBEs and WBEs in accordance with the applicable goals; (c) the price(s) quoted by any potential MBE or WBE source of goods or services is more that 10% above competitive levels; and (d) any other factor determined to be relevant by the Contract Compliance Administrator.

B. Denying a Reduction/Waiver Request.

1. If the Contract Compliance Administrator determines that a Bid or Quotation has not demonstrated adequate Good Faith Efforts to meet the applicable contract MBE and WBE goals, the Contract Compliance Administrator may deny a Petition for Reduction/Waiver and declare the Bid or Quotation non-responsive and recommend rejection of the Bid or Quotation.

2. Failure to undertake and/or to document adequate Good Faith Efforts shall be cause to deny a Petition for Reduction/Waiver. Determination of the adequacy of a Bid's or Quotation's Good Faith Effort will be evaluated on the basis of the Bid's or Quotation's actions as of the date of the Bid or Quotation opening.

GC-19 MINORITY AND WOMEN BUSINESS ENTERPRISES

COOK COUNTY ORDINANCE CHAPTER 34, DIVISION 6, SECTION 34-275 to SECTION 34-303

IV. CHANGES IN CONTRACTOR'S UTILIZATION PLAN

A. Contractor, during its performance of the Contract, may not change the MBE or WBE commitments specified in its Utilization Plan, including but not limited to, terminating a MBE or WBE contract, reducing the scope of the work to be performed by a MBE/WBE, or decreasing the price to a MBE/WBE, except as otherwise provided by the Ordinance.

B. Where an enterprise under the Contact was previously considered to be a MBE or WBE but is later found not to be, or work is found not to be creditable toward the MBE or WBE goals as stated in the Utilization Plan, the Contractor shall seek to discharge the disqualified enterprise, upon proper written notification to the Contract Compliance Administrator, and make every effort to identify and engage a qualified MBE or WBE as its replacement. Failure to obtain a MBE or WBE replacement within 30 working days of the Contract Compliance Administrator's written approval of the removal of a MBE or WBE may result in the termination of the contract or the imposition of such remedy authorized by the Ordinance, unless a written Petition for Reduction/Waiver is granted to Contractor allowing Contractor to award the work to a non-MBE or WBE.

V. NON-COMPLIANCE

If the County determines that the Contractor has failed to comply with its contractual commitments or any portion of the Ordinance or this GC-19, the Contract Compliance Administrator will notify the Contractor of such noncompliance and may take any and all appropriate actions as set forth within the Ordinance.

VI. REPORTING/RECORD-KEEPING REQUIREMENTS

The Contractor is required to comply with the reporting and record-keeping requirements as set forth in the Ordinance and as established by the Contract Compliance Administrator. Upon award of a Contract, Contractor is responsible for acquiring all necessary County reporting and record-keeping forms which will be made available in the Office of Contract Compliance.

VII. EQUAL EMPLOYMENT OPPORTUNITY

Compliance with MBE and WBE requirements will not diminish or supplant Equal Employment Opportunity and Civil Rights provisions as required by law as they relate to contractor and subcontractor obligations.

GC-20 MATERIAL DATA SAFETY SHEET

Where required under the Illinois "Toxic Substance Disclosure To Employees Act", Illinois Compiled Statutes, 1994, 820 ILCS 255/1, Contractor shall submit with each delivery of Contract Goods, a Material Safety Data Sheet.

GC-21 CONDUCT OF THE CONTRACTOR

The Contractor agrees to inform the County on a timely basis of all of the Contractor's interests, if any, which are or which the Contractor reasonably believes may be incompatible with any interest of the County. The Contractor shall take notice of and comply with the Cook County Lobbyist Registration Ordinance (No. 93-0-22, 6-22-93). The Contractor shall not use for personal gain or make other improper use of privileged information which is acquired in connection with the Contract.

GC-22 ACCIDENT REPORTS

The Chief Procurement Officer and Director shall be given written notification within twenty-four (24) hours of any occurrence, on the site or otherwise, which pertains in any way to this Contract and involves the Contractor's personnel, or those of any of his subcontractors or others whether said occurrence be in the nature of bodily injury to employees or third parties or property damage.

The report shall include the name of person(s) injured, name of his employer, date, time and location of occurrence, extent of injury and/or damage, name(s) of eyewitnesses, and who treated the person(s) for injuries sustained, and such other information as may be relevant. The Contractor shall notify the local police any occurrence requiring an official police record. The accident report should indicate whether the police were notified and, if so, the number of the police report.

GC-23 USE OF PREMISES

Contractor shall confer with the Director to ascertain full knowledge of all rules and regulations of the County facilities relative to this Contract and shall comply therewith. The Contractor shall confine the operations of its employees to the limits indicated by laws, ordinances, permits and/or direction of the Director and shall not encumber the premises with materials or debris. The Contractor shall not load or permit any part of the structure to be loaded with a weight that will endanger its safety.

The County reserves the right to prohibit any person from entering any County facility for any reason. All subcontractors, agents and employees of the Contractor shall be accountable to the Director while on any County property and shall abide by all security regulations imposed by the County.

GC-24 GENERAL NOTICE

All notices required pursuant to this Contract shall be in writing and addressed to the parties at their respective addresses set forth below. All such notices shall be deemed duly given if hand delivered or if deposited in the United States mail, registered or certified, return receipt requested. Notice as provided herein does not waive service of summons or process.

TO THE COUNTY:

Chief Procurement Officer
County of Cook
Room 1018 County Building
118 North Clark Street
Chicago, Illinois 60602
(Reference County Contract Number)

TO THE CONTRACTOR:

At address provided in its bid document or as otherwise indicated in writing to County.

GC-25 TERMINATION FOR CONVENIENCE

The County may terminate this Contract, or any portion, at any time by notice in writing from the County to the Contractor.

GC-26 GUARANTEES AND WARRANTIES

All guarantees and warranties required shall be furnished by the Contractor and shall be delivered to the Director before final voucher on the Contract is issued. The Contractor agrees that the Contract Goods or services to be furnished shall be covered by the most favorable commercial warranties the Contractor gives to any customer for the same or substantially similar Contract Goods or services and that the rights and remedies so provided are in addition to and do not limit any rights afforded to County.

GC-27 STANDARD OF CONTRACT GOODS

Only new, originally manufactured Contract Goods will be accepted by the County. The County will not accept any Contract Goods that have been refurbished, rebuilt, restored or renovated in any manner. In addition, experimental materials will not be acceptable. Contract Goods not produced by regular production methods and/or which have not been offered for sale to the public through accepted industry trade channels for a reasonable period of time prior to the offering of the proposal, will be considered experimental.

GC-28 CONFIDENTIALITY AND OWNERSHIP OF DOCUMENTS

Contractor acknowledges and agrees that information regarding this Contract is confidential and shall not be disclosed, directly, indirectly or by implication, or be used by Contractor in any way, whether during the term of this Contract or at any time thereafter, except solely as required in the course of Contractor's performance of Services hereunder. Contractor shall comply with the applicable privacy laws and regulations affecting Owner and will not disclose any of Owner's records, materials, or other data to any third party. Contractor shall not have the right to compile and distribute statistical analyses and reports utilizing data derived from information or data obtained from Owner without the prior written approval of Owner. In the event such approval is given, any such reports published and distributed by Contractor shall be furnished to Owner without charge.

All documents, data, studies, reports, work product or product created as a result of the performance of Service(s) shall be the property of the County of Cook. It shall be a breach of this Contract for the Contractor to reproduce or use, any documents, data, studies, report, work product or product obtained from the County of Cook or created hereby for its own purposes or to be copied and used by any third party. During the performance of the Services herein provided for, the Contractor shall be responsible of any loss or damage to the documents herein enumerated while they are in his possession, and any such document lost or damaged shall be restored at the expense of the Contractor. Full access to the work during the preparation of the plans shall be available to the County and other public agencies interested in this work.

GC-29 QUANTITIES

The quantities of materials required for the performance of the Contract are estimates for the purpose of determining an approximate total Contract amount and may not be the actual quantities required during the term of the Contract. The County reserves the right to increase or decrease the quantities at the Contract price, to correspond to the actual needs of the County. The County will be obligated to order and pay for only such quantities as are from time to time ordered, delivered, and accepted on purchase orders issued by the Chief Procurement Officer.

GC-30 AUDIT; EXAMINATION OF RECORDS

The Contractor agrees that the Cook County Auditor or any of its duly authorized representatives shall, until expiration of three (3) years after the final payment under the Contract, have access and the right to examine any books, documents, papers, canceled checks, bank statements, purveyor's and other invoices, and records of the Contractor related to the Contract, or to Contractor's compliance with any term, condition or provision thereof. The Contractor shall be responsible for establishing and maintaining records sufficient to document the costs associated with performance under the terms of this Contract.

The Contractor further agrees that it shall include in all of its subcontracts hereunder a provision to the effect that the subcontractor agrees that the Cook County Auditor or any of its duly authorized representatives shall, until expiration of three (3) years after final payment under the subcontract, have access and the right to examine any books, documents, papers, canceled checks, bank statements, purveyor's and other invoices and records of such subcontractor involving transactions relating to the subcontract, or to such subcontractor's compliance with any term, condition or provision thereunder or under the Contract.

In the event the Contractor receives payment under the Contract, reimbursement for which is later disallowed by the County, the Contractor shall promptly refund the disallowed amount to the County on request, or at the County's option, the County may credit the amount disallowed from the next payment due or to become due to the Contractor under any contract with the County.

GC-31 GOVERNING LAW

This Contract shall be governed by and construed under the laws of the State of Illinois. The Contractor irrevocably agrees that, subject to the County's sole and absolute election, any action or proceeding in any way, manner or respect arising out of the Contract, or arising from any dispute or controversy arising in connection with or related to the Contract, shall be litigated only in courts within the City of Chicago, County of Cook, State of Illinois, and the Contractor consents and submits to the jurisdiction thereof. In accordance with these provisions, Contractor waives any right it may have to transfer or change the venue of any litigation brought against it by the County pursuant to this Contract.

GC-32 COOPERATION WITH INSPECTOR GENERAL

Contractors, subcontractors, licensees, grantees or persons or businesses who have a County contract, grant, license, or certification of eligibility for County contracts shall abide by all of the applicable provisions of the Office of the Independent Inspector General Ordinance (Section 2-281 et. seq. of the Cook County Code of Ordinances). Failure to cooperate as required may result in monetary and/or other penalties.

GC-33 WAIVER

No term or provision of this Contract shall be deemed waived and no breach consented to unless such waiver or consent shall be in writing and signed by the party claimed to have waived or consented. The waiver of any such provision shall be strictly limited to the identified provision.

GC-34 ENTIRE CONTRACT

It is expressly agreed that the provisions set forth in this Contract constitute all the understandings and agreements between the parties. Any prior agreements, promises, negotiations, or representations not expressly set forth in this Contract are of no force and effect.

GC-35 FORCE MAJEURE

Neither Contractor nor County shall be liable for failing to fulfill any obligation under this Contract if such failure is caused by an event beyond such party's reasonable control and which is not caused by such party's fault or negligence. Such events shall be limited to acts of God, acts of war, fires, lightning, floods, epidemics, or riots.

GC-36 GOVERNMENTAL JOINT PURCHASING AGREEMENT

Pursuant to Section 4 of the Illinois Governmental Joint Purchasing Act (30 ILCS 525) and the Joint Purchase Agreement approved by the Cook County Board of Commissioners (April 9, 1965), other units of government may purchase goods or services under this contract.

In the event that other agencies participate in a joint procurement, the County reseves the right to renegotiate the price to accommodate the larger volume.

GC-37 COOPERATIVE PURCHASING

As permitted by the County of Cook, other government entities may wish to also participate under the same terms and conditions contained in this contract (piggyback). Each entity wishing to piggyback must have prior authorization from the County of Cook and vendor. If such participation is authorized, all purchase orders will be issued directly from and shipped directly to the entity requiring supplies/services. The County shall not be held responsible for any orders placed, deliveries made or payment for supplies/services ordered by these entities. Each entity reserves the right to determine their participation in this contract.

GC-38 FEDERAL CLAUSES

1. Interest of Members of or Delegates to the United States Congress

In accordance with 41 U.S.C. § 22, the Contractor agrees that it will not admit any member of or delegate to the United States Congress to any share or part of the Contract or any benefit derived therefrom.

2. False or Fraudulent Statements and Claims

(a) The Contractor recognizes that the requirements of the Program Fraud Civil Remedies Act of 1986, as amended, 49 U.S.C. §§ 3081 et seq and U.S. DOT regulations, "Program Fraud Civil Remedies," 49 C.F.R. Part 31, apply to its actions pertaining to the Contract. Accordingly, by signing the Contract, the Contractor certifies or affirms the truthfulness and accuracy of any statement it has made, it makes, or it may make pertaining to the Contract, including without limitation any invoice for its services. In addition to other penalties that may be applicable, the Contractor also acknowledges that if it makes a false, fictitious, or fraudulent claim, statement, submission, or certification, the Federal Government reserves the right to impose the penalties of the Program Fraud Civil Remedies Act of 1986, as amended, on the Contractor to the extent the Federal Government deems appropriate.

(b) The Contractor also acknowledges that if it makes a false, fictitious, or fraudulent claim, statement, submission, or certification to the County or Federal Government in connection with an urbanized area formula project financed with Federal assistance authorized by 49 U.S.C. § 5307, the Government reserves the right to impose on the Contractor the penalties of 18 U.S.C. § 1001 and 49 U.S.C. § 5307(n)(1), to the extent the Federal Government deems appropriate.

3. Federal Interest in Patents

(a) General. If any invention, improvement, or discovery of the Contractor is conceived or first actually reduced to practice in the course of or under the Contract, and that invention, improvement, or discovery is patentable under the laws of the Unites States of America or any foreign country, the Contractor agrees to notify County immediately and provide a detailed report.

(b) Federal Rights. Unless the Federal Government later makes a contrary determination in writing, the rights and responsibilities of the County, Contractor, and the Federal Government pertaining to that invention, improvement, or discovery will be determined in accordance with applicable Federal laws and regulations, including any waiver thereof. Unless the Federal Government later makes a contrary determination in writing, the Contractor agrees that, irrespective of its status or the status of any subcontractor at any tier (e.g., a large business, small business, non-profit organization, institution of higher education, individual), the Contractor agrees it will transmit to the Federal Government those rights due the Federal Government in any invention resulting from the contract.

4. Federal Interest in Data and Copyrights

(a) Definition. The term "subject data" used in this section means recorded information, whether or not copyrighted, that is delivered or specified to be delivered under the Contract. Examples include, but are not limited, to: computer software, engineering drawings and associated lists, specifications, standards, process sheets, manuals, technical reports, catalog item identifications, and related information. The term "subject data" does not include financial reports, cost analyses, and similar information incidental to Contract administration.

(b) Federal Restrictions. The following restrictions apply to all subject data first produced in the performance of the Contract. Except as provided in the Contract and except for its own internal use, the Contractor may not publish or publicly reproduce subject data in whole or in part, or in any manner or form, nor may the Contractor authorize others to do so, without the written consent of the County and the Federal Government, until such time as the Federal Government may have either released or approved the release of such data to the public.

GC-38 FEDERAL CLAUSES (CON'T.)

(c) Federal Rights in Data and Copyrights. In accordance with subparts 34 and 36 of the Common Rule, the County and the Federal Government reserve a royalty-free, non-exclusive and irrevocable license to reproduce, publish, or otherwise use, and to authorize others to use, for County or Federal Government purposes, the types of subject data described below. Without the copyright owner's consent, the County and Federal Government may not extend their license to other parties.

(1) Any subject data developed under the contract or subagreement financed by a federal Grant Agreement or Cooperative Agreement, whether or not a copyright has been obtained; and

(2) Any rights of copyright which the Contractor purchases ownership with Federal assistance.

(d) Special Federal Rights for Planning Research and Development Projects. When the Federal Government provides financial assistance for a planning, research, development, or demonstration project, its general intention is to increase public knowledge, rather than limit the benefits of the project to participants in the project. Therefore, unless the Federal Government determines otherwise, the Contractor on a planning, research, development, or demonstration project agrees that, in addition to the rights in data and copyrights set forth above, the County or Federal Government may make available to any third party either a license in the copyright to the subject data or a copy of the subject data. If the project is not completed for any reason whatsoever, all data developed under the project will become subject data and will be delivered as the County or Federal Government may direct. This subsection, however, does not apply to adaptions of automatic data processing equipment or previously existing software programs for the County's use whose costs are financed with Federal transportation funds for capital projects.

(e) Hold Harmless. Unless prohibited by state law, upon request by the County or the Federal Government, the Contractor agrees to indemnify, save, and hold harmless the County and the Federal Government and their officers, agents, and employees acting within the scope of their official duties against any liability, including costs and expenses, resulting from any willful or intentional violation by the Contractor of proprietary rights, copyrights, or right of privacy, arising out of the publication, translation, reproduction, delivery, use, or disposition of any data furnished under the Contract. The Contractor will not be required to indemnify the County or Federal Government for any such liability arising out of the wrongful acts of employees or agents of the County or Federal Government.

(f) Restrictions on Access to Patent Rights. Nothing contained in this section on rights in data will imply a license to the County or Federal Government under any patent or be construed as affecting the scope of any license or other right otherwise granted to the County or Federal Government under any patent.

(g) Application on Materials Incorporated into Project. The requirements of Subsections 2, 3, and 4 of this Section do not apply to material furnished by the County and incorporated into the work.

GC-38 FEDERAL CLAUSES (CON'T.)

5. Records and Audits

Contractor will deliver or cause to be delivered all documents (including but not limited to all Deliverables and supporting data, records, graphs, charts and notes) prepared by or for the County under the terms of this Agreement to the County promptly in accordance with the time limits prescribed in this Contract, and if no time limit is specified, then upon reasonable demand therefor or upon termination or completion of the Services hereunder. In the event of the failure by the Contractor to make such delivery, then and in that event, the Contractor will pay to County reasonable damages the County may sustain by reason thereof.

The County and the Federal Government will have the right to audit all payments made to the Contractor under this Agreement. Any payments to the Contractor which exceed the amount to which the Contractor is entitled under the terms of this Agreement will be subject to set-off.

The Contractor will keep and retain records relating to this Agreement and will make such records available to representatives of the County and the Federal Government, including without limitation the sponsoring federal agency, other participating agencies, and the Comptroller General of the United States, at reasonable times during the performance of this Agreement and for at least five years after termination of this Agreement for purposes of audit, inspection, copying, transcribing and abstracting.

No provision in this Agreement granting the County or the Federal Government a right of access to records is intended to impair, limit or affect any right of access to such records which the County or the Federal Government would have had in the absence of such provisions.

6. Environmental Requirements

The Contractor recognizes that many Federal and state laws imposing environmental and resource conservation requirements may apply to the Contract. Some, but not all, of the major Federal Laws that may affect the Contract include: the National Environmental Policy Act of 1969, as amended, 42 U.S.C. §§ 4321 et seq.; the Clean Air Act, as amended, 42 U.S.C. §§ 7401 et seq. and scattered sections of 29 U.S.C.; the Clean Water Act, as amended, scattered sections of 33 U.S.C. and 12 U.S.C.; the Resource Conservation and Recovery Act, as amended, 42 U.S.C. §§ 6901 et seq.; and the Comprehensive Environmental Response, Compensation, and Liability acct, as amended, 42 U.S.C. §§ 9601 et seq. The Contractor also recognizes that U.S. EPA, U.S. DOT and other agencies of the Federal Government have issued and are expected in the future to issue regulations, guidelines, standards, orders, directives, or other requirements that may affect the Contract. Thus, the Contractor agrees to adhere to, and impose on its subcontractors, any such Federal requirements as the Federal Government may now or in the future promulgate. Listed below are requirements of particular concern. The Contractor acknowledges that this list does not constitute the Contractor's entire obligation to meet all Federal environmental and resource conservation requirements. The Contractor will include these provisions in all subcontracts.

(a) Environmental Protection. The Contractor agrees to comply with the applicable requirements of the National Environmental Policy Act of 1969, as amended, 42 U.S.C. §§ 4321 et seq. in accordance with Executive Order No. 12898, "Federal Actions to Address Environmental Justice in Minority Populations and Low-Income Populations," 59 Fed. Reg. 7629, Feb. 16, 1994; U.S. DOT statutory requirements on environmental matters at 49 U.S.C. § 5324(b); Council on Environmental Quality regulations on compliance with the National Environmental Policy Act of 1969, as amended, 40 C.F.R. Part 1500 et seq.; and U.S. DOT regulations, "Environmental Impact and Related Procedures," 23 C.F.R. Part 771 and 49 C.F.R. Part 622.

GC-38 FEDERAL CLAUSES (CON'T.)

(b) Air Quality. The Contractor agrees to comply with all applicable standards, orders, or regulations issued pursuant to the Clean Air Act, as amended, 42 U.S.C. §§ 7401 et seq. Specifically, the Contractor agrees to comply with applicable requirements of U.S. EPA regulations, "Conformity to State of Federal Implementation Plans of Transportation Plans, Programs, and Projects Developed, Funded or Approved Under Title 23 U.S.C. or the Federal Transit Act," 40 C.F.R. Part 51, Subpart T; and "Determining Conformity of Federal Actions to State or Federal Implementation Plans," 40 C.F.R. Part 93. The Contractor further agrees to report and require each subcontractor at any tier to report any violation of these requirements resulting from any Contract implementation activity to the County and the appropriate U.S. EPA Regional Office.

(c) Clean Water. The Contractor agrees to comply with all applicable standards, orders, or regulations issued pursuant to the Federal Water Pollution Control Act, as amended, 33 U.S.C. §§ 1251 et seq. The Contractor further agrees to report and require each subcontractor at any tier to report any violation of these requirements resulting from any Contract implementation activity to the County and the appropriate U.S. EPA Regional Office.

(d) List of Violating Facilities. The Contractor agrees that any facility to be used in the performance of the Contract or to benefit from the Contract will not be listed on the U.S. EPA List of Violating Facilities ("List"), and the Contractor will promptly notify the County if the Contractor receives any communication from the U.S. EPA that such a facility is under consideration for inclusion on the List.

(e) Preference for Recycled Products. To the extent practicable and economically feasible and to the extent that it does not reduce or impair the quality of the work, the Contractor agrees to use recycled products in performance of the Contract pursuant to U.S. Environment Protection Agency (U.S. EPA) guidelines at 40 C.F.R. Parts 247-253, which implement section 6002 of the Resource Conservation and Recovery Act, as amended, 42 U.S.C. § 6962.

7. No Exclusionary or Discriminatory Specifications

Apart from inconsistent requirements imposed by Federal statute or regulations, the Contractor agrees that it will comply with the requirements of 49 U.S.C. § 5323(h)(2) by refraining from using any Federal assistance to support subcontracts procured using exclusionary or discriminatory specifications.

8. Cargo Preference - Use of United States Flag Vessels

The Contractor agrees to comply with U.S. Maritime Administration regulations, "Cargo-Preference -- U.S. Flag Vessels," 49 C.F.R. Part 381, and to include the clauses required by those regulations, modified as necessary to identify the affected parties, in each subcontract or subagreement involving equipment, materials, or commodities suitable for transport by ocean vessel.

9. Fly America

Section 14.c of the Master Agreement states that if the contract or subcontracts may involve the international transportation of goods, equipment, or personnel by air, the contract must require Contractors and subcontractors at every tier to use U.S.-flag air carriers, to the extent service by these carriers is available. 49 U.S.C. 40118 and 4 C.F.R. Part 52.

GC-38 FEDERAL CLAUSES (CON'T.)

10. No Federal Government Obligations to Third Parties

The Contractor agrees that, absent the Federal Government's express written consent, the Federal Government will not be subject to any obligations or liabilities to any contractor or any other person not a party to the Grant Agreement or Cooperative Agreement between the County and the Federal Government which is a source of funds for this Contract. Notwithstanding any concurrence provided by the Federal Government in or approval of any solicitation, agreement, or contract, the Federal Government continues to have no obligations or liabilities to any party, including the Contractor.

11. Allowable Costs

Notwithstanding any compensation provision to the contrary, the Contractor's compensation under this Contract will be limited to those amounts which are allowable and allocable to the Contract in accordance with OMB Circular A-87 and the regulations in 49 C.F.R. Part 18. To the extent that an audit reveals that the Contractor has received payment in excess of such amounts, the County may offset such excess payments against any future payments due to the Contractor and, if no future payments are due or if future payments are less than such excess, the Contractor will promptly refund the amount of the excess payments to the County.

12. Trade Restrictions

Contractor certifies that neither it nor any Subcontractor:

(a) is owned or controlled by one or more citizens of a foreign country included in the list of countries that discriminate against U.S. firms published by the Office of the United States Trade Representative (USTR);

(b) has knowingly entered into any contract or subcontract with a person that is a citizen or national of a foreign country on said list, nor is owned or controlled directly or indirectly by one or more citizens or nationals of a foreign country on said list;

(c) will procure, subcontract for, or recommend any product that is produced in a foreign country on said list.

Unless the restrictions of this clause are waived by the Secretary of Transportation in accordance with 49 CFR 30.17, no Notice-to-Proceed will be issued to an entity who is unable to certify to the above. If Contractor knowingly procures or subcontracts for the supply of any product or service of a foreign country on said list for use on the project, the USDOT may direct, through the County, cancellation of the Contract at no cost to the Government.

Further, Contractor agrees that it will incorporate this provision for certification without modification in each subcontract. Contractor may rely on the certification of a prospective Subcontractor unless it has knowledge that the certification is erroneous. Contractor will provide immediate written notice to the County if it learns that its certification or that of a Subcontractor was erroneous when submitted or has become erroneous by reason of changed circumstances. Each Subcontractor must agree to provide written notice to Contractor if at any time it learns that its certification was erroneous by reason of changed circumstances. Nothing contained in the foregoing will be construed to require establishment of a system of records in order to render, in good faith, the certification required by this provision. The knowledge and information of the Contractor is not required to exceed that which is normally possessed by a prudent person in the ordinary course of business dealings.

This certification concerns a matter within the jurisdiction of an agency of the United States of America and the making of a false, fictitious, or fraudulent certification may render the maker subject to prosecution under Title 18, United States Code, Section 100.

GC-38 FEDERAL CLAUSES (CON'T.)

13. Contract Work Hours and Safety Standards Act

If applicable according to their terms, the Contractor agrees to comply and assures compliance with sections 102 and 107 of the Contract Work Hours and Safety Standards Act, as amended, 40 U.S.C. §§ 327 through 333, and implementing U.S. DOL regulations, "Labor Standards Provisions Applicable to Contracts Governing Federally Financed and Assisted Construction (also Labor Standards Provisions Applicable to Nonconstruction Contracts Subject to the Contract Work Hours and Safety Standards Act)," 29 C.F.R. Part 5; and U.S. DOL regulations, "Safety and Health Regulations for Construction," 29 C.F.R. Part 1926. In addition to other requirements that may apply:

(a) In accordance with section of the Contract Work Hours and Safety Standards Act, as amended, 40 U.S.C. §§ 327 through 332, the Contractor agrees and assures that, for the Contract, the wages of every mechanic and laborer will be computed on the basis of a standard work week of 40 hours, and that each worker will be compensated for work exceeding the standard work week at a rate of not less than 1.5 times the basic rate of pay for all hours worked in excess of 40 hours in the work week. The Contractor agrees that determinations pertaining to these requirements will be made in accordance with applicable U.S. DOL regulations, "Labor Standards Provisions Applicable to Contracts Governing Federally Financed and Assisted Construction (also Labor Standards Provisions Applicable to Nonconstruction Contracts Subject to the Contract Work Hours and Safety Standards Act)," 29 C.F.R. Part 5.

(b) In accordance with section 107 of the Contract Work Hours and Safety Standards Act, as amended, 40 U.S.C. § 333, the contractor agrees and assures that no laborer or mechanic working on a construction contract will be required to work in surroundings or under working conditions that are unsanitary, hazardous, or dangerous to his or her health and safety, as determined in accordance with U.S. DOL regulations, "Safety and Health Regulations for Construction," 29 C.F.R. Part 1926.

14. Veteran's Preference

In the employment of labor (except in executive, administrative, and supervisory positions), preference will be given to Vietnam-era veterans and disabled veterans. However, this preference may be given only where individuals are available and qualified to perform the work to which employment relates.

15. Copyright Ownership

Consultant and the County intend that, to the extent permitted by law, the Deliverables to be produced by Consultant at the County's instance and expense pursuant to this Agreement are conclusively deemed "works made for hire" within the meaning and purview of Section 101 of the United States Copyright Act, 17 U.S.C. §101 et seq. (the "Copyright Act"), and that the County will be the copyright owner of the Deliverables and of all aspects, elements and components of them in which copyright can subsist.

To the extent that any Deliverable does not qualify as a "work made for hire," Consultant irrevocably grants, conveys, bargains, sells, assigns, transfers and delivers to the County, its successors and assigns, all right, title and interest in and to the copyrights and all U.S. and foreign copyright registrations, copyright applications and copyright renewals for them, and other intangible, intellectual property embodied in or pertaining to the Deliverables prepared for the County under this Agreement, free and clear of any liens, claims or other encumbrances, to the fullest extent permitted by law. Consultant will execute all documents and perform all acts that the County may reasonably request in order to assist the County in perfecting its rights in and to the copyrights relating to the Deliverables, at the sole expense of the County. Consultant warrants to County, its successors and assigns, that on the date of transfer Consultant is the lawful owner of good and marketable title in and to the copyrights for the Deliverables and has the legal rights to fully assign them. Consultant further warrants that it has not assigned any copyrights nor granted any licenses, exclusive or nonexclusive, to any other party, and that it is not a party to any other agreements or subject to any other restrictions with respect to the Deliverables. Consultant warrants and represents that the Deliverables are complete and comprehensive, and the Deliverables are a work of original authorship.

.GC-38 FEDERAL CLAUSES (CON'T.)

16. Accessibility Compliance

If this Agreement involves design for construction, the Consultant warrants that all design documents produced or utilized under this Agreement and all construction or alterations undertaken under this Agreement will comply with all federal, state and local laws and regulations regarding accessibility standards for persons with disabilities or environmentally limited persons including, but not limited to, the following: the Americans with Disabilities Act of 1990, 42 U.S.C. § 12101 et seq. and the Americans with Disabilities Act Accessibility Guidelines for Buildings and Facilities ("ADAAG"); the Architectural Barriers Act, Pub. L. 90-480 (1968), and the Uniform Federal Accessibility Standards ("UFAS"); and the Illinois Environmental Barriers Act, 410 ILCS 25/1 et seq., and all regulations promulgated thereunder , see Illinois Administrative Code, Title 71, Chapter 1, Section 400.110. If the above standards are inconsistent, the Consultant must comply with the standard providing the greatest accessibility. Also, the Consultant must, prior to construction, review the plans and specifications to insure compliance with the above referenced standards. If the Consultant fails to comply with the foregoing standards, the Consultant must perform again, at no expense, all services required to be re-performed as a direct or indirect result of such failure.

17. Visual Rights Act Waiver

The Consultant/Contractor waives any and all rights that may be granted or conferred under Section 106A and Section 113 of the United States Copyright Act, (17 U.S.C. § 101 et seq.) (the "Copyright Act") in any work of visual art that may be provided pursuant to this Agreement,. Also, the Consultant/Contractor represents and warrants that the Consultant/Contractor has obtained a waiver of Section 106A and Section 113 of the Copyright Act as necessary from any employees and subcontractors, if any.

18. Equal Employment Opportunity

All contracts shall contain a provision requiring compliance with E.O. 11246, "Equal Employment Opportunity," as amended by E.O. 11375, "Amending Executive Order 11246 Relating to Equal Employment Opportunity," and as supplemented by regulations at 41 CFR part 60, "Office of Federal Contract Compliance Programs, Equal Employment Opportunity, Department of Labor."

19. Copeland "Anti-Kickback" Act (18 U.S.C. 874 and 40 U.S.C. 276c)

All contracts and subgrants in excess of $2000 for construction or repair awarded by recipients and subrecipients shall include a provision for compliance with the Copeland "Anti-Kickback" Act (18 U.S.C. 874), as supplemented by Department of Labor regulations (29 CFR part 3, "Contractors and Subcontractors on Public Building or Public Work Financed in Whole or in Part by Loans or Grants from the United States"). The Act provides that each contractor or subrecipient shall be prohibited from inducing, by any means, any person employed in the construction, completion, or repair of public work, to give up any part of the compensation to which he is otherwise entitled. The recipient shall report all suspected or reported violations to the Federal awarding agency.

20. Davis-Bacon Act, as amended (40 U.S.C. 276a to a-7)

When required by Federal program legislation, all construction contracts awarded by the recipients and subrecipients of more than $2000 shall include a provision for compliance with the Davis-Bacon Act (40 U.S.C. 276a to a-7) and as supplemented by Department of Labor regulations (29 CFR part 5, "Labor Standards Provisions Applicable to Contracts Governing Federally Financed and Assisted Construction"). Under this Act, contractors shall be required to pay wages to laborers and mechanics at a rate not less than the minimum wages specified in a wage determination made by the Secretary of Labor. In addition, contractors shall be required to pay wages not less than once a week. The recipient shall place a copy of the current prevailing wage determination issued by the Department of Labor in each solicitation and the award of a contract shall be conditioned upon the acceptance of the wage determination. The recipient shall report all suspected or reported violations to the Federal awarding agency.

GC-38 FEDERAL CLAUSES (CON'T.)

21. Contract Work Hours and Safety Standards Act (40 U.S.C. 327-333)

Where applicable, all contracts awarded by recipients in excess of $2000 for construction contracts and in excess of $2500 for other contracts that involve the employment of mechanics or laborers shall include a provision for compliance with Sections 102 and 107 of the Contract Work Hours and Safety Standards Act (40 U.S.C. 327-333), as supplemented by Department of Labor regulations (29 CFR part 5). Under Section 102 of the Act, each contractor shall be required to compute the wages of every mechanic and laborer on the basis of a standard work week of 40 hours. Work in excess of the standard work week is permissible provided that the worker is compensated at a rate of not less than 1 ½ times the basic rate of pay for all hours worked in excess of 40 hours in the work week. Section 107 of the Act is applicable to construction work and provides that no laborer or mechanic shall be required to work in surroundings or under working conditions which are unsanitary, hazardous or dangerous. These requirements do not apply to the purchases of supplies or materials or articles ordinarily available on the open market, or contracts for transportation or transmission of intelligence.

22. Rights to Inventions Made Under a Contract or Agreement

Contracts or agreements for the performance of experimental, developmental, or research work shall provide for the rights of the Federal Government and the recipient in any resulting invention in accordance with 37 CFR part 401, "Rights to Inventions Made by Nonprofit Organizations and Small Business Firms Under Government Grants, Contracts and Cooperative Agreements," and any implementing regulations issued by the awarding agency.

23. Clean Air Act (42 U.S.C. 7401 et seq.) and the Federal Water Pollution Control Act (33 U.S.C. 1251 et seq.), as amended

Contracts and subgrants of amounts in excess of $100,000 shall contain a provision that requires the recipient to agree to comply with all applicable standards, orders or regulations issued pursuant to the Clean Air Act (42 U.S.C. 7401 et seq.) and the Federal Water Pollution Control Act as amended (33 U.S.C. 1251 et seq.). Violations shall be reported to the Federal awarding agency and the Regional Office of the Environmental Protection Agency (EPA).

24. Byrd Anti-Lobbying Amendment (31 U.S.C. 1352)

Contractors who apply or bid for an award of $100,000 or more shall file the required certification. Each tier certifies to the tier above that it will not and has not used Federal appropriated funds to pay any person or organization for influencing or attempting to influence an officer or employee of any agency, a member of Congress, officer or employee of Congress, or an employee of a member of Congress in connection with obtaining any Federal contract, grant or any other award covered by 31 U.S.C. 1352. Each tier shall also disclose any lobbying with non-Federal funds that takes place in connection with obtaining any Federal award. Such disclosures are forwarded from tier to tier up to the recipient.

25. Debarment and Suspension (E.O.s 12549 and 12689)

No contract shall be made to parties listed on the General Services Administration's List of Parties Excluded from Federal Procurement or Nonprocurement Programs in accordance with E.O.s 12549 and 12689, "Debarment and Suspension." This list contains the names of parties debarred, suspended, or otherwise excluded by agencies, and contractors declared ineligible under statutory or regulatory authority other than E.O. 12549. Contractors with awards that exceed the small purchase threshold shall provide the required certification regarding its exclusion status and that of its principal employees.

GC-39 CONTRACT INTERPRETATION

Whenever the singular is used herein, the masculine, feminine and neuter gender shall be deemed to include the others. The headings of articles, paragraphs and sections in this Contract are included for convenience only and shall not be considered by either party in construing the meaning of this Contract. If any provision or clause of this Contract shall be held to be invalid, such provision or clause shall be deleted from the Contract and the Contract shall be construed to give effect to the remaining portions thereof.

This Contract shall be interpreted and construed based upon the following order of precedence of component parts. Such order of precedence shall govern to resolve all cases of conflict, ambiguity or inconsistency.

1. Addenda, if any.
2. Execution Forms
3. Specification.
4. Special Conditions.
5. General Conditions.
6. Instruction to Bidders.
7. Legal Advertisement.
8. Bid Proposal.

END OF SECTION

SPECIAL CONDITIONS

SC-01 SCOPE

The bidder shall furnish a Spray Flow II Industrial Steam Deaerator for Cook County Department of Facilities Management, all in accordance with the Contract Documents, Specifications and Proposal herein. **This Bid document is specific to Spray Flow II. No other manufacturers are solicited nor will they be considered.**

SC-02 CONTRACT PERIOD

This is a contract effective for February 1, 2015 through January 31, 2016, with one, one year renewal option after award by the Board of Commissioners and after proper execution of the Contract Documents.

SC-03 AWARD OF CONTRACT

The contract shall be awarded to the lowest responsible and responsive bidder whose bid meets the requirements and criteria set forth in the Request for Sealed Bid. All items, unless otherwise stated, will be assumed to meet all specifications and requirements as set forth in the Request for Sealed Bid. Ambiguous bids which are uncertain as to terms, delivery, quantity, or compliance with specifications may be rejected or declared non-responsive. The County shall be sole determinant of the relevant and appropriate cost factors used in evaluating any Base, Options and/or Alternate bids. Bidders must quote all lines for consideration. It is the intent of the County to award this bid in whole and not in part. Only one award will result from this bid.

SC-04 MBE/WBE REQUIREMENTS FOR THIS CONTRACT

The bidder shall have a subcontracting goal of not less than twelve and a half (12.5%) percent MBE and five (5%) percent WBE of the awarded contract price for work to be performed.

The bidder must comply with the County's MBE/WBE participation requirements. The County has issued MBE/WBE goals for this Project. The bidder shall submit with its Proposal, an MBE/WBE Utilization Plan indicating how it proposes to meet these goals. If the bidder has not met the goals or made good faith efforts to meet the goals, the bidder's response will be deemed nonresponsive and will not be considered for award. The MBE/WBE firms must certified by the County of Cook or the City of Chicago.

Certified MBE/WBE bidders may count their own participation, however, a female firm certified as M/WBE or W/MBE may be counted towards the MBE or WBE goal, but not both. (Designations cannot be changed after submission of the compliance plan.)

Unless otherwise specified in the Bid Documents, for purposes of this contract, the contract amount is the total bid amount that has been entered on the Proposal Page of the Bid Documents.

SPECIAL CONDITIONS

SC-05 INQUIRIES

A copy of any written request for interpretation of documents shall be provided to the Office of the Chief Procurement Officer at the address set forth below.

Inquiries about the interpretation of the Specifications must be made only in writing and shall be directed to the Chief Procurement Officer. Inquiries will be answered in writing, if deemed necessary, by means of an Addendum issued by the Office of the Chief Procurement Officer. (Reference Instructions to Bidders, Section IB-05 "Exceptions", Page IB-2). **Inquiries must be received no later than 12:00 p.m. on December 3, 2014.**

During the bid process, all inquiries must be directed, in writing, only to the Office of the Chief Procurement Officer as follows:

Shannon E. Andrews
Cook County Chief Procurement Officer
c/o Dan Gizzi, Specifications Engineer III
118 N. Clark Street, Room 1018
Chicago, IL 60602

Contact Info for Specifications Engineer III:
Dan Gizzi: (312) 603-6825, dan.gizzi@cookcountyil.gov

SC-06 WARRANTY

One (1) year warranty on all items upon receipt of delivery.

SC-79 DELIVERY INSTRUCTIONS

Time of delivery shall be between the hours of 5:00 a.m. and 12:00 p.m., Monday through Friday, except County Holidays. Delivery shall be on pallets and stretch-wrapped. Freight and delivery costs shall be included in the vendor's bid. Purchase Order Number is to appear on the dock receipt when goods are delivered. Vendor will make delivery upon request during the one-year contract term. Vendor must contact the Head Engineer at (773) 674-6264 at least 48 hours before delivery. The loading dock at the above location will not accommodate a tractor trailer delivery truck.

"Holidays" means the following National Holidays only: Columbus Day, Veteran's Day, Thanksgiving Day, Christmas Day, New Year's Day, Martin Luther King Day and Washington's Birthday.

Vendor is responsible for inside dock delivery:

SPECIAL CONDITIONS

SC-08 DELIVERY LOCATION

R. J. Institute of Forensic Medicine
Department of Facilities Management
2121 W. Harrison Street
Chicago, IL 60612
5:00 A.M. – 12:00 P.M.

SC-09 LATE DELIVERIES

No Deliveries will be accepted after the time specified.

SC-10 PRODUCT MANUAL

All vendors must present a current product manual for the Spray Flow II Industrial Steam Deaerator with its bid.

SC-11 NOTIFICATION

Do not deliver until notified by using department.

SPECIFICATIONS

ITEM NO.01 INDUSTRIAL STEAM DEAERATOR

SPRAY FLOW II INDUSTRIAL STEAM DEAERATOR
Model Number: 2SP5II
Rated Capacity: 6,900 LBS/HOUR, 200 HP
Receiver Size D & L Inches: 30" x 96"
System Capacity to Overflow: 290 GALLONS, 21 MINUTE
Recycle Pump: 20 GPM, ¾ HP
Overall Dimensions: Height 90", Length 108", and Width 42"
Shipping Weight: 1,800 pounds

UNIT RECIEVER TANK MUST BE BOLT-ON AND BE ABLE TO EASLIY REMOVED FOR DOORWAY ACCESSIBILITY.

- **CONSTANT RECYCLING** deaeration of all dissolved oxygen in excess of .005 cc/liter from 0% to 100% of deaerator capacity.
- **UNIQUE FULL PARTITION DEAERATOR DESIGN** accepts gravity returns to the atmospheric scrubbing section along with make-up and pumped returns. Deaerating section accepts trapped returns for preferential use of flash steam.
- **ELECTRONIC INSTRUMENTATION FOR MODULATING DEAERATOR LEVEL** control includes a HART compatible differential pressure transmitter, PID controller, and motorized control valve.
- **SEPARATE DEAERATING & MIXING SECTIONS** two stage continuous cycle which provides .005 cc/l deaerated water during all load conditions regardless of surges from the system.
- **ONLY STAINLESS STEEL DEAERATOR** components come in contact with undeaerated water.
- **ATMOSPHERIC NON-CODE DEAERATOR VESSEL** requires no annual shutdown for inspection.
- **CUSTOM ENGINEERED PACKAGED DEAERATOR SYSTEM** includes boiler feed water pumps and quality components to insure reliable.

CONTRACT NO. 1445-14222

PROPOSAL

BIDDER: **Affiliated Steam Equipment Company**

The undersigned declares that they have carefully examined the Advertisement for Bids, the Proposal Form, General and Special Conditions and Specifications identified as Contract Document Number 1445-13900 for Cook County Department of Facilities Management for a Spray Flow II Industrial Steam Deaerator, as prepared by Cook County, and that they have familiarized themselves with all of the conditions under which it must be carried out and understand that in making this Proposal they waive all rights to plead any misunderstanding regarding the same.

ITEM NO.	UNIT OF MEASURE	QTY.	DESCRIPTION
1.	EACH	1	SPRAY FLOW II INDUSTRIAL STEAM DEAERATOR, AS PER SPECIFICATIONS HEREIN.

$ **67,500.00** /EACH

$ **67,500.00** TOTAL

MFR **Industrial Steam**

MFR NO. **2SP5II**

GRAND TOTAL: $ **67,500.00**

DELIVERY DATE: **10-12 weeks after drawing approval / 70-84 days**

(NUMBER OF CALENDAR DAYS AFTER AWARD OF CONTRACT)

The receipt of the following addenda to the Specifications is acknowledged:

Addendum No. **N/A** Date: _____

Addendum No. _____ Date: _____

Addendum No. _____ Date: _____

PROPOSAL

QUICK PAYMENT DISCOUNTS

Cook County is working hard to reduce budgets, engage in strategic sourcing, and streamline internal processes. Consequently, Cook County has initiated a Quick Payment program. The Quick Payment program serves the purpose of both benefiting Cook County and the vendor community. The County will be able to able purchase goods and services in a timelier manner while improving vendor relations. Vendors will benefit from reduced collection periods and improved capital charges. This will allow the vendor community to also reduce opportunity costs and improve strategic planning capabilities. In the chart below please provide what quick payment discounts your company is willing to offer. This will be used for informational purposes.

Quick Payment Discounts

1. What payment terms would your company propose for this procurement?

   Net 30

2. Is there a quick payment discount that your company would be willing to offer? If so, please provide details.

EARLY PAYMENT	% DISCOUNT
NET 30	**N/A** %
NET 20	_____ %
OTHER	_____ %

ECONOMIC DISCLOSURE STATEMENT AND EXECUTION DOCUMENT INDEX

Section	Description	Pages
Instructions	Instructions for Completion of EDS	EDS i - ii
1	MBE/WBE Utilization Plan	EDS 1
2	Letter of Intent	EDS 2
3	Petition for Reduction/Waiver of MBE/WBE Participation Goals	EDS 3
4	Certifications	EDS 4, 5
5	Economic and Other Disclosures, Affidavit of Child Support Obligations and Disclosure of Ownership Interest	EDS 6 – 12
6	Sole Proprietor Signature Page	EDS 13a/b/c
7	Partnership Signature Page	EDS 14/a/b/c
8	Limited Liability Corporation Signature Page	EDS 15a/b/c
9	Corporation Signature Page	EDS 16a/b/c
10	Cook County Signature Page	EDS 17

ECONOMIC DISCLOSURE STATEMENT

INSTRUCTIONS FOR COMPLETION OF ECONOMIC DISCLOSURE STATEMENT AND EXECUTION DOCUMENT

This Economic Disclosure Statement and Execution Document ("EDS") is to be completed and executed by every Bidder on a County contract, every party responding to a Request for Proposals or Request for Qualifications "(Proposer"), and others as required by the Chief Procurement Officer. If the Undersigned is awarded a contract pursuant to the procurement process for which this EDS was submitted (the "Contract"), this Economic Disclosure Statement and Execution Document shall stand as the Undersigned's execution of the Contract.

Definitions. Capitalized terms used in this EDS and not otherwise defined herein shall have the meanings given to such terms in the Instructions to Bidders, General Conditions, Request for Proposals, Request for Qualifications, or other documents, as applicable.

"Affiliated Entity" means a person or entity that, directly or indirectly: controls the Bidder, is controlled by the Bidder, or is, with the Bidder, under common control of another person or entity. Indicia of control include, without limitation, interlocking management or ownership; identity of interests among family members; shared facilities and equipment; common use of employees; and organization of a business entity following the ineligibility of a business entity to do business with the County under the standards set forth in the Certifications included in this EDS, using substantially the same management, ownership or principals as the ineligible entity.

"Bidder," "Proposer," "Undersigned," or **"Applicant,"** is the person or entity executing this EDS. Upon award and execution of a Contract by the County, the Bidder, Proposer, Undersigned or Applicant, as the case may be, shall become the Contractor or Contracting Party.

"Proposal," for purposes of this EDS, is the Undersigned's complete response to an RFP/RFQ, or if no RFQ/RFP was issued by the County, the "Proposal" is such other proposal, quote or offer submitted by the Undersigned, and in any event a "Proposal" includes this EDS .

"Code" means the Code of Ordinances, Cook County, Illinois available through the Cook County Clerk's Office website (http://www.cookctyclerk.com/sub/ordinances.asp). This page can also be accessed by going to www.cookctyclerk.com, clicking on the tab labeled "County Board Proceedings," and then clicking on the link to "Cook County Ordinances."

"Contractor" or **"Contracting Party"** means the Bidder, Proposer or Applicant with whom the County has entered into a Contract.

"EDS" means this complete Economic Disclosure Statement and Execution Document, including all sections listed in the Index and any attachments.

"Lobby" or **"lobbying"** means to, for compensation, attempt to influence a County official or County employee with respect to any County matter.

"Lobbyist" means any person or entity who lobbies.

"Prohibited Acts" means any of the actions or occurrences which form the basis for disqualification under the Code, or under the Certifications hereinafter set forth.

Sections 1 through 3: MBE/WBE Documentation. Sections 1 and 2 must be completed in order to satisfy the requirements of the County's MBE/WBE Ordinance, as set forth in the Contract Documents, if applicable. If the Undersigned believes a waiver is appropriate and necessary, Section 3, the Petition for Waiver of MBE/WBE Participation must be completed.

Section 4: Certifications. Section 4 sets forth certifications that are required for contracting parties under the Code. Execution of this EDS constitutes a warranty that all the statements and certifications contained, and all the facts stated, in the Certifications are true, correct and complete as of the date of execution.

Section 5: Economic and Other Disclosures Statement. Section 5 is the County's required Economic and Other Disclosures Statement form. Execution of this EDS constitutes a warranty that all the information provided in the EDS is true, correct and complete as of the date of execution, and binds the Undersigned to the warranties, representations, agreements and acknowledgements contained therein.

ECONOMIC DISCLOSURE STATEMENT

INSTRUCTIONS FOR COMPLETION OF ECONOMIC DISCLOSURE STATEMENT AND EXECUTION DOCUMENT

Sections 6, 7, 8, 9: Execution Forms. The Bidder executes this EDS, and the Contract, by completing and signing three copies of the appropriate Signature Page. Section 6 is the form for a sole proprietor; Section 7 is the form for a partnership or joint venture; Section 8 is the form for a Limited Liability Corporation, and Section 9 is the form for a corporation. Proper execution requires THREE ORIGINALS; therefore, the appropriate Signature Page must be filled in, three copies made, and all three copies must be properly signed, notarized and submitted. The forms may be printed and completed by typing or hand writing the information required.

Required Updates. The information provided in this EDS will be kept current. In the event of any change in any information provided, including but not limited to any change which would render inaccurate or incomplete any certification or statement made in this EDS, the Undersigned will supplement this EDS up to the time the County takes action, by filing an amended EDS or such other documentation as is requested.

Additional Information. The County's Governmental Ethics and Campaign Financing Ordinances, impose certain duties and obligations on persons or entities seeking County contracts, work, business, or transactions. For further information please contact the Director of Ethics at (312) 603-4304 (69 W. Washington St. Suite 3040, Chicago, IL 60602) or visit our web-site at www.cookcountygov.com and go to the Ethics Department link. The Bidder must comply fully with the applicable ordinances.

ECONOMIC DISCLOSURE STATEMENT

MBE/WBE UTILIZATION PLAN (SECTION 1)

BIDDER/PROPOSER HEREBY STATES that all MBE/WBE firms included in this Plan are certified MBEs/WBEs by at least one of the entities listed in the General Conditions.

I. **BIDDER/PROPOSER MBE/WBE STATUS:** (check the appropriate line)

_____Bidder/Proposer is a certified MBE or WBE firm. (If so, attach copy of appropriate Letter of Certification)

_____Bidder/Proposer is a Joint Venture and one or more Joint Venture partners are certified MBEs or WBEs. (If so, attach copies of Letter(s) of Certification, a copy of Joint Venture Agreement clearly describing the role of the MBE/WBE firm(s) and its ownership interest in the Joint Venture and a completed Joint Venture Affidavit – available from the Office of Contract Compliance)

__X__Bidder/Proposer is not a certified MBE or WBE firm, nor a Joint Venture with MBE/WBE partners, but will utilize MBE and WBE firms either directly or indirectly in the performance of the Contract. (If so, complete Sections II and III).

II. _____Direct Participation of MBE/WBE Firms _____Indirect Participation of MBE/WBE Firms

Where goals have not been achieved through direct participation, Bidder/Proposer shall include documentation outlining efforts to achieve Direct Participation at the time of Bid/Proposal submission. Indirect Participation will only be considered after all efforts to achieve Direct Participation have been exhausted. Only after written documentation of Good Faith Efforts is received will Indirect Participation be considered.

MBEs/WBEs that will perform as subcontractors/suppliers/consultants include the following:

MBE/WBE Firm: _____

Address: _____

E-mail: _____

Contact Person: _____Phone:_____

Dollar Amount Participation: $_____

Percent Amount of Participation:_____%

*Letter of Intent attached? Yes _____ No _____

*Letter of Certification attached? Yes _____ No _____

MBE/WBE Firm: _____

Address: _____

E-mail: _____

Contact Person: _____Phone: _____

Dollar Amount Participation: $_____

Percent Amount of Participation: _____%

*Letter of Intent attached? Yes _____ No _____

*Letter of Certification attached? Yes _____ No _____

Attach additional sheets as needed.

***Additionally, all Letters of Intent, Letters of Certification and documentation of Good Faith Efforts omitted from this bid/proposal <u>must</u> be submitted to the Office of Contract Compliance so as to assure receipt by the Contract Compliance Administrator not later than three (3) business days after the Bid Opening date.**

ECONOMIC DISCLOSURE STATEMENT

COOK COUNTY GOVERNMENT LETTER OF INTENT (SECTION 2)

M/WBE Firm: _____ Certifying Agency: _____

Address: _____ Certification Expiration Date: _____

City/State: _____ Zip: _____ FEIN #: _____

Phone: _____ Fax: _____ Contact Person: _____

Email: _____ Contract #: _____

Participation: _____Direct _____Indirect

Will the M/WBE firm be subcontracting any of the performance of this contract to another firm?

No _____ Yes _____ If " Yes", please attach explanation. Proposed Subcontractor: _____

The undersigned M/WBE is prepared to provide the following Commodities/Services for the above named Project/ Contract:

_____

_____

_____

_____

Indicate the Dollar Amount, or Percentage, and the Terms of Payment for the above-described Commodities/ Services:

_____

_____

_____

(If more space is needed to fully describe M/WBE Firm's proposed scope of work and/or payment schedule, attach additional sheets)

THE UNDERSIGNED PARTIES AGREE that this Letter of Intent will become a binding Subcontract Agreement conditioned upon the Bidder/Proposer's receipt of a signed contract from the County of Cook. The Undersigned Parties do also certify that they did not affix their signatures to this document until all areas under Description of Service/ Supply and Fee/Cost were completed.

_____	_____
Signature (M/WBE)	Signature (Prime Bidder/Proposer)
_____	_____
Print Name	Print Name
_____	_____
Firm Name	Firm Name
_____	_____
Date	Date
Subscribed and sworn before me	Subscribed and sworn before me
this ____ day of _____, 20_____.	this ____ day of _____, 20_____.
Notary Public _____	Notary Public _____
SEAL	SEAL

ECONOMIC DISCLOSURE STATEMENT

PETITION FOR WAIVER OF MBE/WBE PARTICIPATION (SECTION 3)

A. BIDDER/PROPOSER HEREBY REQUESTS:

__X__ FULL MBE WAIVER __X__ FULL WBE WAIVER

_____ REDUCTION (PARTIAL MBE and/or WBE PARTICIPATION)

_____ % of Reduction for MBE Participation

_____ % of Reduction for WBE Participation

B. REASON FOR FULL/REDUCTION WAIVER REQUEST:

Bidder/Proposer shall check each item applicable to its reason for a waiver request. Additionally, supporting documentation shall be submitted with this request. If such supporting documentation cannot be submitted with bid/proposal/quotation, such documentation shall be submitted directly to the Office of Contract Compliance no later than three (3) days from the date of submission date.

_____ (1) Lack of sufficient qualified MBEs and/or WBEs capable of providing the goods or services required by the contract. (Please explain)

_____ (2) The specifications and necessary requirements for performing the contract make it impossible or economically infeasible to divide the contract to enable the contractor to utilize MBEs and/or WBEs in accordance with the applicable participation. (Please explain)

_____ (3) Price(s) quoted by potential MBEs and/or WBEs are above competitive levels and increase cost of doing business and would make acceptance of such MBE and/or WBE bid economically impracticable, taking into consideration the Percentage of total contract price represented by such MBE and/or WBE bid. (Please explain)

__X__ (4) There are other relevant factors making it impossible or economically infeasible to utilize MBE and/or WBE firms. (Please explain)

C. GOOD FAITH EFFORTS TO OBTAIN MBE/WBE PARTICIPATION:

_____ (1) Made timely written solicitation to identified MBEs and WBEs for utilization of goods and/or services; and provided MBEs and WBEs with a timely opportunity to review and obtain relevant specifications, terms and conditions of the proposal to enable MBEs and WBEs to prepare an informed response to solicitation. (Please attach)

_____ (2) Followed up initial solicitation of MBEs and WBEs to determine if firms are interested in business. (Please attach)

_____ (3) Advertised in a timely manner in one or more daily newspapers and/or trade publication for MBEs and WBEs for supply of goods and services. (Please attach)

_____ (4) Used the services and assistance of the Office of Contract Compliance staff. (Please explain)

_____ (5) Engaged MBEs & WBEs for indirect participation. (Please explain)

D. OTHER RELEVANT INFORMATION:

Attach any other documentation relative to Good Faith Efforts in complying with MBE/WBE participation.

Affiliated
Steam • Hot Water

12424 South Lombard Lane
Alsip, IL 60803
PHONE (708) 371-0600 • FAX (708) 371-0670

December 17, 2014

COOK COUNTY
CONTRACT FOR SUPPLY
CONTRACT NO. 1445-14222
REQ# 115781

RE: Request to Waive MBE and WBE Compliance

Affiliated Steam Equipment Company is a manufacturer's representative for HVAC products and does not provide installation and/or labor services, and is therefore unable to find an avenue to integrate an MBE/WBE firm in a commercially useful function. As a result, we are requesting a waiver of MBE/WBE participation.

Sincerely,

Don Howley
Sales Solution Representative

/ajl

ECONOMIC DISCLOSURE STATEMENT

CERTIFICATIONS (SECTION 4)

THE FOLLOWING CERTIFICATIONS ARE MADE PURSUANT TO STATE LAW AND THE CODE. THE UNDERSIGNED IS CAUTIONED TO CAREFULLY READ THESE CERTIFICATIONS PRIOR TO SIGNING THE SIGNATURE PAGE. SIGNING THE SIGNATURE PAGE SHALL CONSTITUTE A WARRANTY BY THE UNDERSIGNED THAT ALL THE STATEMENTS, CERTIFICATIONS AND INFORMATION SET FORTH WITHIN THESE CERTIFICATIONS ARE TRUE, COMPLETE AND CORRECT AS OF THE DATE THE SIGNATURE PAGE IS SIGNED. THE UNDERSIGNED IS NOTIFIED THAT IF THE COUNTY LEARNS THAT ANY OF THE FOLLOWING CERTIFICATIONS WERE FALSELY MADE, THAT ANY CONTRACT ENTERED INTO WITH THE UNDERSIGNED SHALL BE SUBJECT TO TERMINATION.

A. PERSONS AND ENTITIES SUBJECT TO DISQUALIFICATION

No person or business entity shall be awarded a contract or sub-contract, for a period of five (5) years from the date of conviction or entry of a plea or admission of guilt, civil or criminal, if that person or business entity:

1) Has been convicted of an act committed, within the State of Illinois, of bribery or attempting to bribe an officer or employee of a unit of state, federal or local government or school district in the State of Illinois in that officer's or employee's official capacity;

2) Has been convicted by federal, state or local government of an act of bid-rigging or attempting to rig bids as defined in the Sherman Anti-Trust Act and Clayton Act. Act. 15 U.S.C. Section 1 et seq.;

3) Has been convicted of bid-rigging or attempting to rig bids under the laws of federal, state or local government;

4) Has been convicted of an act committed, within the State, of price-fixing or attempting to fix prices as defined by the Sherman Anti-Trust Act and the Clayton Act. 15 U.S.C. Section 1, et seq.;

5) Has been convicted of price-fixing or attempting to fix prices under the laws the State;

6) Has been convicted of defrauding or attempting to defraud any unit of state or local government or school district within the State of Illinois;

7) Has made an admission of guilt of such conduct as set forth in subsections (1) through (6) above which admission is a matter of record, whether or not such person or business entity was subject to prosecution for the offense or offenses admitted to; or

8) Has entered a plea of nolo contendere to charge of bribery, price-fixing, bid-rigging, or fraud, as set forth in sub-paragraphs (1) through (6) above.

In the case of bribery or attempting to bribe, a business entity may not be awarded a contract if an official, agent or employee of such business entity committed the Prohibited Act on behalf of the business entity and pursuant to the direction or authorization of an officer, director or other responsible official of the business entity, and such Prohibited Act occurred within three years prior to the award of the contract. In addition, a business entity shall be disqualified if an owner, partner or shareholder controlling, directly or indirectly, 20 % or more of the business entity, or an officer of the business entity has performed any Prohibited Act within five years prior to the award of the Contract.

THE UNDERSIGNED HEREBY CERTIFIES THAT: The Undersigned has read the provisions of Section A, Persons and Entities Subject to Disqualification, that the Undersigned has not committed any Prohibited Act set forth in Section A, and that award of the Contract to the Undersigned would not violate the provisions of such Section or of the Code.

B. BID-RIGGING OR BID ROTATING

THE UNDERSIGNED HEREBY CERTIFIES THAT: In accordance with 720 ILCS 5/33 E-11, neither the Undersigned nor any Affiliated Entity is barred from award of this Contract as a result of a conviction for the violation of State laws prohibiting bid-rigging or bid rotating.

C. DRUG FREE WORKPLACE ACT

THE UNDERSIGNED HEREBY CERTIFIES THAT: The Undersigned will provide a drug free workplace, as required by Public Act 86-1459 (30 ILCS 580/2-11).

D. DELINQUENCY IN PAYMENT OF TAXES

THE UNDERSIGNED HEREBY CERTIFIES THAT: The Undersigned is not an owner or a party responsible for the payment of any tax or fee administered by Cook County, by a local municipality, or by the Illinois Department of Revenue, which such tax or fee is delinquent, such as bar award of a contract or subcontract pursuant to the Code, Chapter 34, Section 34-129.

E. HUMAN RIGHTS ORDINANCE

No person who is a party to a contract with Cook County ("County") shall engage in unlawful discrimination or sexual harassment against any individual in the terms or conditions of employment, credit, public accommodations, housing, or provision of County facilities, services or programs (Code Chapter 42, Section 42-30 et seq).

ECONOMIC DISCLOSURE STATEMENT

F. ILLINOIS HUMAN RIGHTS ACT

THE UNDERSIGNED HEREBY CERTIFIES THAT: It is in compliance with the the Illinois Human Rights Act (775 ILCS 5/2-105), and agrees to abide by the requirements of the Act as part of its contractual obligations.

G. MACBRIDE PRINCIPLES, CODE CHAPTER 34, SECTION 34-132

If the primary contractor currently conducts business operations in Northern Ireland, or will conduct business during the projected duration of a County contract, the primary contractor shall make all reasonable and good faith efforts to conduct any such business operations in Northern Ireland in accordance with the MacBride Principles for Northern Ireland as defined in Illinois Public Act 85-1390.

H. LIVING WAGE ORDINANCE PREFERENCE (COOK COUNTY CODE, CHAPTER 34, SECTION 34-127;

The Code requires that a living wage must be paid to individuals employed by a Contractor which has a County Contract and by all subcontractors of such Contractor under a County Contract, throughout the duration of such County Contract. The amount of such living wage is determined from time to time by, and is available from, the Chief Financial Officer of the County.

For purposes of this EDS Section 4, H, "Contract" means any written agreement whereby the County is committed to or does expend funds in connection with the agreement or subcontract thereof. The term "Contract" as used in this EDS, Section 4, I, specifically excludes contracts with the following:

1) Not-For Profit Organizations (defined as a corporation having tax exempt status under Section 501(C)(3) of the United State Internal Revenue Code and recognized under the Illinois State not-for -profit law);

2) Community Development Block Grants;

3) Cook County Works Department;

4) Sheriff's Work Alternative Program; and

5) Department of Correction inmates.

ECONOMIC DISCLOSURE STATEMENT

REQUIRED DISCLOSURES (SECTION 5)

1. DISCLOSURE OF LOBBYIST CONTACTS

List all persons or entities that have made lobbying contacts on your behalf with respect to this contract:

Name Address

N/A

2. LOCAL BUSINESS PREFERENCE DISCLOSURE; CODE, CHAPTER 34, SECTION 34-151(p);

"Local Business" shall mean a person authorized to transact business in this State and having a bona fide establishment for transacting business located within Cook County at which it was actually transacting business on the date when any competitive solicitation for a public contract is first advertised or announced and further which employs the majority of its regular, full time work force within Cook County, including a foreign corporation duly authorized to transact business in this State and which has a bona fide establishment for transacting business located within Cook County at which it was actually transacting business on the date when any competitive solicitation for a public contract is first advertised or announced and further which employs the majority of its regular, full time work force within Cook County.

a) Is Bidder a "Local Business" as defined above?

Yes X No _____

b) If yes, list business addresses within Cook County:

c) Does Bidder employ the majority of its regular full-time workforce within Cook County?

Yes X No _____

3. THE CHILD SUPPORT ENFORCEMENT ORDINANCE (PREFERENCE (CODE, CHAPTER 34, SECTION 34-366)

Every Applicant for a County Privilege shall be in full compliance with any child support order before such Applicant is entitled to receive or renew a County Privilege. When delinquent child support exists, the County shall not issue or renew any County Privilege, and may revoke any County Privilege.

All Applicants are required to review the Cook County Affidavit of Child Support Obligations attached to this EDS (EDS-8) and complete the following, based upon the definitions and other information included in such Affidavit.

ECONOMIC DISCLOSURE STATEMENT

4. REAL ESTATE OWNERSHIP DISCLOSURES.

The Undersigned must indicate by checking the appropriate provision below and providing all required information that either:

a) The following is a complete list of all real estate owned by the Undersigned in Cook County:

PERMANENT INDEX NUMBER(S): 24-27-411-009-0000

(ATTACH SHEET IF NECESSARY TO LIST ADDITIONAL INDEX NUMBERS)

OR:

b) _____The Undersigned owns no real estate in Cook County.

5. EXCEPTIONS TO CERTIFICATIONS OR DISCLOSURES.

If the Undersigned is unable to certify to any of the Certifications or any other statements contained in this EDS and not explained elsewhere in this EDS, the Undersigned must explain below:

If the letters, "NA", the word "None" or "No Response" appears above, or if the space is left blank, it will be conclusively presumed that the Undersigned certified to all Certifications and other statements contained in this EDS.

CONTRACT NO. 1445-14222

ECONOMIC DISCLOSURE STATEMENT

COOK COUNTY DISCLOSURE OF OWNERSHIP INTEREST STATEMENT

The Cook County Code of Ordinances (§2-610 et seq.) requires that any Applicant for any County Action must disclose information concerning ownership interests in the Applicant. This Disclosure of Ownership Interest Statement must be completed with all information current as of the date this Statement is signed. Furthermore, this Statement must be kept current, by filing an amended Statement, until such time as the County Board or County Agency shall take action on the application. The information contained in this Statement will be maintained in a database and made available for public viewing.

If you are asked to list names, but there are no applicable names to list, you must state NONE. An incomplete Statement will be returned and any action regarding this contract will be delayed. A failure to fully comply with the ordinance may result in the action taken by the County Board or County Agency being voided.

"Applicant" means any Entity or person making an application to the County for any County Action.

"County Action" means any action by a County Agency, a County Department, or the County Board regarding an ordinance or ordinance amendment, a County Board approval, or other County agency approval, with respect to contracts, leases, or sale or purchase of real estate.

"Entity" or "Legal Entity" means a sole proprietorship, corporation, partnership, association, business trust, estate, two or more persons having a joint or common interest, trustee of a land trust, other commercial or legal entity or any beneficiary or beneficiaries thereof.

This Disclosure of Ownership Interest Statement must be submitted by :

1. An Applicant for County Action and

2. An individual or Legal Entity that holds stock or a beneficial interest in the Applicant and is listed on the Applicant's Statement (a "Holder") must file a Statement and complete #1 only under Ownership Interest Declaration.

Please print or type responses clearly and legibly. Add additional pages if needed, being careful to identify each portion of the form to which each additional page refers.

This Statement is being made by the [ ] Applicant or [ ] Stock/Beneficial Interest Holder

This Statement is an: [X] Original Statement or [ ] Amended Statement

Identifying Information:

Name: Richard M. Lee D/B/A: Affiliated Steam Equipment Company EIN NO.: 36-2392793

Street Address: 12424 South Lombard Lane

City: Alsip State: IL Zip Code: 60803

Phone No.: 708-371-0600

Form of Legal Entity:

[ ]	Sole Proprietor	[ ]	Partnership	[X]	Corporation	[ ]	Trustee of Land Trust
[ ]	Business Trust	[ ]	Estate	[ ]	Association	[ ]	Joint Venture

[ ] Other (describe) _____

CONTRACT NO. 1445-14222

ECONOMIC DISCLOSURE STATEMENT

Ownership Interest Declaration:

1. List the name(s), address, and percent ownership of each individual and each Entity having a legal or beneficial interest (including ownership) of more than five percent (5%) in the Applicant/Holder.

Name	Address	Percentage Interest in Applicant/Holder
Richard C. Lee	51 Shadow Creek Circle, Palos Hts., IL	50.428667%
Dawn L. Lee	51 Shadow Creek Circle, Palos Hts., IL	17.735333%
Richard M. Lee	1824 N. Marshfield Ave., Chicago, IL	16.116%
Alexis A. Lee	1935 N. Dayton, Unit 1, Chicago, IL	15.720000%

2. If the interest of any individual or any Entity listed in (1) above is held as an agent or agents, or a nominee or nominees, list the name and address of the principal on whose behalf the interest is held.

Name of Agent/Nominee	Name of Principal	Principal's Address

3. Is the Applicant constructively controlled by another person or Legal Entity? [ ] Yes [X] No

If yes, state the name, address and percentage of beneficial interest of such person or legal entity, and the relationship under which such control is being or may be exercised.

Name	Address	Percentage of Beneficial Interest	Relationship

Declaration (check the applicable box):

[ ] I state under oath that the Applicant has withheld no disclosure as to ownership interest in the Applicant nor reserved any information, data or plan as to the intended use or purpose for which the Applicant seeks County Board or other County Agency action.

[X] I state under oath that the Holder has withheld no disclosure as to ownership interest nor reserved any information required to be disclosed.

Richard M. Lee — Name of Authorized Applicant/Holder Representative (please print or type)

Vice President — Title

Signature

12-17-14 — Date

rmlee@affiliatedsteam.com — E-mail address

708-371-0600 — Phone Number

Subscribed to and sworn before me this 17th day of December 2014.

My commission expires: 3-24-16

X Kim Marie Rackos

Notary Public Signature

Notary Seal

"OFFICIAL SEAL"
Kim Marie Rackos
Notary Public, State of Illinois
My Commission Expires 3/24/2016

ECONOMIC DISCLOSURE STATEMENT

COOK COUNTY BOARD OF ETHICS
69 W. WASHINGTON STREET, SUITE 3040
CHICAGO, ILLINOIS 60602
312/603-4304
312/603-9988 FAX 312/603-1011 TT/TDD

FAMILIAL RELATIONSHIP DISCLOSURE PROVISION:

Section 2-582 of the Cook County Ethics Ordinance requires any person or persons doing business with Cook County, upon execution of a contract with Cook County, to disclose to the Cook County Board of Ethics the existence of familial relationships they may have with all persons holding elective office in the State of Illinois, the County of Cook, or in any municipality within the County of Cook.

The disclosure required by this section shall be filed by January 1 of each calendar year or within thirty (30) days of the execution of any contract or lease. Any person filing a late disclosure statement after January 31 shall be assessed a late filing fee of $100.00 per day that the disclosure is late. Any person found guilty of violating any provision of this section or knowingly filing a false, misleading, or incomplete disclosure to the Cook County Board of Ethics shall be prohibited, for a period of three (3) years, from engaging, directly or indirectly, in any business with Cook County. Note: Please see Chapter 2 Administration, Article VII Ethics, Section 2-582 of the Cook County Code to view the full provisions of this section.

If you have questions concerning this disclosure requirement, please call the Cook County Board of Ethics at (312) 603-4304. Note: A current list of contractors doing business with Cook County is available via the Cook County Board of Ethics' website at: http://www.cookcountygov.com/taxonomy/ethics/Listings/cc_ethics_VendorList_.pdf

DEFINITIONS:

"Calendar year" means January 1 to December 31 of each year.

"Doing business" for this Ordinance provision means any one or any combination of leases, contracts, or purchases to or with Cook County or any Cook County agency in excess of $25,000 in any calendar year.

"Familial relationship" means a person who is related to an official or employee as spouse or any of the following, whether by blood, marriage or adoption:

Parent	Grandparent	Stepfather
Child	Grandchild	Stepmother
Brother	Father-in-law	Stepson
Sister	Mother-in-law	Stepdaughter
Aunt	Son-in-law	Stepbrother
Uncle	Daughter-in-law	Stepsister
Niece	Brother-in-law	Half-brother
Nephew	Sister-in-law	Half-sister

"Person" means any individual, entity, corporation, partnership, firm, association, union, trust, estate, as well as any parent or subsidiary of any of the foregoing, and whether or not operated for profit.

CONTRACT NO. 1445-14222

ECONOMIC DISCLOSURE STATEMENT

SWORN FAMILIAL RELATIONSHIP DISCLOSURE FORM

Pursuant to Section 2-582 of the Cook County Ethics Ordinance, any person* doing business* with Cook County must disclose, to the Cook County Board of Ethics, the existence of familial relationships* to any person holding elective office in the State of Illinois, Cook County, or in any municipality within Cook County. Please print your responses.

Name of Owner/Employee:_____ Title:_____

Business Entity Name:_____ Phone:_____

Business Entity Address:_____

_____The following familial relationship exists between the owner or any employee of the business entity contracted to do business with Cook County and any person holding elective office in the State of Illinois, Cook County, or in any municipality within Cook County.

Owner/Employee Name: Related to: Relationship:

1._____

2._____

3._____

4._____

5._____

If more space is needed, attach an additional sheet following the above format.

__X__ There is no familial relationship that exists between the owner or any employee of the business entity contracted to do business with Cook County and any person holding elective office in the State of Illinois, Cook County, or in any municipality within Cook County.

To the best of my knowledge and belief, the information provided above is true and complete.

_____ 12-17-14

Owner/Employee's Signature Date

Subscribe and sworn before me this 17th day of December, 20 14.

a Notary Public in and for Cook County

Kim Marie Rackos

(Signature)

NOTARY PUBLIC SEAL "OFFICIAL SEAL" Kim Marie Rackos Notary Public, State of Illinois My Commission Expires 3/24/2016

My Commission expires 3-24-16

Completed forms must be filed within 30 days of the execution of any contract or lease with Cook County and should be mailed to:

Cook County Board of Ethics
69 West Washington Street,
Suite 3040
Chicago, Illinois 60602

ECONOMIC DISCLOSURE STATEMENT

SIGNATURE BY A SOLE PROPRIETOR

(SECTION 6)

The Undersigned hereby certifies and warrants: that all of the statements, certifications and representations set forth in this EDS are true, complete and correct; that the Undersigned is in full compliance and will continue to be in compliance throughout the term of the Contract or County Privilege issued to the Undersigned with all the policies and requirements set forth in this EDS; and that all facts and information provided by the Undersigned in this EDS are true, complete and correct. The Undersigned agrees to inform the Chief Procurement Officer in writing if any of such statements, certifications, representations, facts or information becomes or is found to be untrue, incomplete or incorrect during the term of the Contract or County Privilege.

BUSINESS NAME: N/A

BUSINESS ADDRESS:_____

BUSINESS TELEPHONE:_____ FAX NUMBER:_____

FEIN/SSN:_____

COOK COUNTY BUSINESS REGISTRATION NUMBER:_____

SOLE PROPRIETOR'S SIGNATURE:_____

PRINT NAME:_____

DATE:_____

Subscribed to and sworn before me

this ____ day of _____, 20_____.

X_____

Notary Public Signature

My commission expires:

_____

Notary Seal

ECONOMIC DISCLOSURE STATEMENT

SIGNATURE BY A SOLE PROPRIETOR

(SECTION 6)

The Undersigned hereby certifies and warrants: that all of the statements, certifications and representations set forth in this EDS are true, complete and correct; that the Undersigned is in full compliance and will continue to be in compliance throughout the term of the Contract or County Privilege issued to the Undersigned with all the policies and requirements set forth in this EDS; and that all facts and information provided by the Undersigned in this EDS are true, complete and correct. The Undersigned agrees to inform the Chief Procurement Officer in writing if any of such statements, certifications, representations, facts or information becomes or is found to be untrue, incomplete or incorrect during the term of the Contract or County Privilege.

BUSINESS NAME: **N/A**

BUSINESS ADDRESS:_____

_____

BUSINESS TELEPHONE:_____ FAX NUMBER:_____

FEIN/SSN:_____

COOK COUNTY BUSINESS REGISTRATION NUMBER:_____

SOLE PROPRIETOR'S SIGNATURE:_____

PRINT NAME:_____

DATE:_____

Subscribed to and sworn before me

this ____ day of _____, 20_____.

X_____

Notary Public Signature

My commission expires:

_____

Notary Seal

ECONOMIC DISCLOSURE STATEMENT

SIGNATURE BY A SOLE PROPRIETOR

(SECTION 6)

The Undersigned hereby certifies and warrants: that all of the statements, certifications and representations set forth in this EDS are true, complete and correct; that the Undersigned is in full compliance and will continue to be in compliance throughout the term of the Contract or County Privilege issued to the Undersigned with all the policies and requirements set forth in this EDS; and that all facts and information provided by the Undersigned in this EDS are true, complete and correct. The Undersigned agrees to inform the Chief Procurement Officer in writing if any of such statements, certifications, representations, facts or information becomes or is found to be untrue, incomplete or incorrect during the term of the Contract or County Privilege.

BUSINESS NAME: N/A

BUSINESS ADDRESS:_____

BUSINESS TELEPHONE:_____ FAX NUMBER:_____

FEIN/SSN:_____

COOK COUNTY BUSINESS REGISTRATION NUMBER:_____

SOLE PROPRIETOR'S SIGNATURE:_____

PRINT NAME:_____

DATE:_____

Subscribed to and sworn before me

this ____ day of _____, 20_____.

X_____

Notary Public Signature

My commission expires:

_____

Notary Seal

ECONOMIC DISCLOSURE STATEMENT

SIGNATURE BY A PARTNERSHIP (AND/OR A JOINT VENTURE)

(SECTION 7)

The Undersigned hereby certifies and warrants: that all of the statements, certifications and representations set forth in this EDS are true, complete and correct; that the Undersigned is in full compliance and will continue to be in compliance throughout the term of the Contract or County Privilege issued to the Undersigned with all the policies and requirements set forth in this EDS; and that all facts and information provided by the Undersigned in this EDS are true, complete and correct. The Undersigned agrees to inform the Chief Procurement Officer in writing if any of such statements, certifications, representations, facts or information becomes or is found to be untrue, incomplete or incorrect during the term of the Contract or County Privilege.

BUSINESS NAME: **N/A**

BUSINESS ADDRESS:_____

_____

BUSINESS TELEPHONE:_____ FAX NUMBER:_____

FEIN/SSN:_____

*COOK COUNTY BUSINESS REGISTRATION NUMBER:_____

SIGNATURE OF PARTNER AUTHORIZED TO EXECUTE CONTRACTS ON BEHALF OF PARTNERSHIP:

*BY:_____

DATE:_____

Subscribed to and sworn before me

this ____ day of _____, 20_____.

X_____

Notary Public Signature

My commission expires:

_____

Notary Seal

* Attach hereto a partnership resolution or other document authorizing the individual signing this Signature Page to so sign on behalf of the Partnership.

ECONOMIC DISCLOSURE STATEMENT

SIGNATURE BY A PARTNERSHIP (AND/OR A JOINT VENTURE)

(SECTION 7)

The Undersigned hereby certifies and warrants: that all of the statements, certifications and representations set forth in this EDS are true, complete and correct; that the Undersigned is in full compliance and will continue to be in compliance throughout the term of the Contract or County Privilege issued to the Undersigned with all the policies and requirements set forth in this EDS; and that all facts and information provided by the Undersigned in this EDS are true, complete and correct. The Undersigned agrees to inform the Chief Procurement Officer in writing if any of such statements, certifications, representations, facts or information becomes or is found to be untrue, incomplete or incorrect during the term of the Contract or County Privilege.

BUSINESS NAME: N/A

BUSINESS ADDRESS:_____

BUSINESS TELEPHONE:_____ FAX NUMBER:_____

FEIN/SSN:_____

*COOK COUNTY BUSINESS REGISTRATION NUMBER:_____

SIGNATURE OF PARTNER AUTHORIZED TO EXECUTE CONTRACTS ON BEHALF OF PARTNERSHIP:

*BY:_____

DATE:_____

Subscribed to and sworn before me

this ____ day of _____, 20_____.

X_____

Notary Public Signature

My commission expires:

_____

Notary Seal

* Attach hereto a partnership resolution or other document authorizing the individual signing this Signature Page to so sign on behalf of the Partnership.

ECONOMIC DISCLOSURE STATEMENT

SIGNATURE BY A PARTNERSHIP (AND/OR A JOINT VENTURE)

(SECTION 7)

The Undersigned hereby certifies and warrants: that all of the statements, certifications and representations set forth in this EDS are true, complete and correct; that the Undersigned is in full compliance and will continue to be in compliance throughout the term of the Contract or County Privilege issued to the Undersigned with all the policies and requirements set forth in this EDS; and that all facts and information provided by the Undersigned in this EDS are true, complete and correct. The Undersigned agrees to inform the Chief Procurement Officer in writing if any of such statements, certifications, representations, facts or information becomes or is found to be untrue, incomplete or incorrect during the term of the Contract or County Privilege.

BUSINESS NAME: N/A

BUSINESS ADDRESS:_____

BUSINESS TELEPHONE:_____ FAX NUMBER:_____

FEIN/SSN:_____

*COOK COUNTY BUSINESS REGISTRATION NUMBER:_____

SIGNATURE OF PARTNER AUTHORIZED TO EXECUTE CONTRACTS ON BEHALF OF PARTNERSHIP:

*BY:_____

DATE:_____

Subscribed to and sworn before me

this ____ day of _____, 20_____.

X_____

Notary Public Signature

My commission expires:

_____

Notary Seal

* Attach hereto a partnership resolution or other document authorizing the individual signing this Signature Page to so sign on behalf of the Partnership.

ECONOMIC DISCLOSURE STATEMENT

SIGNATURE BY A LIMITED LIABILITY CORPORATION

(SECTION 8)

The Undersigned hereby certifies and warrants: that all of the statements, certifications and representations set forth in this EDS are true, complete and correct; that the Undersigned is in full compliance and will continue to be in compliance throughout the term of the Contract or County Privilege issued to the Undersigned with all the policies and requirements set forth in this EDS; and that all facts and information provided by the Undersigned in this EDS are true, complete and correct. The Undersigned agrees to inform the Chief Procurement Officer in writing if any of such statements, certifications, representations, facts or information becomes or is found to be untrue, incomplete or incorrect during the term of the Contract or County Privilege.

BUSINESS NAME: N/A

BUSINESS ADDRESS:_____

BUSINESS TELEPHONE:_____ FAX NUMBER:_____

CONTACT PERSON:_____

FEIN:_____ *CORPORATE FILE NUMBER:_____

MANAGING MEMBER:_____ MANAGING MEMBER:_____

**SIGNATURE OF MANAGER:_____

ATTEST:_____

Subscribed to and sworn before me

this ____ day of _____, 20_____.

X_____ _____

Notary Public Signature **Notary Seal**

*** If the LLC is not registered in the State of Illinois, a copy of a current Certificate of Good Standing from the state of incorporation must be submitted with this Signature Page.**

**** Attach either a certified copy of the by-laws, articles, resolution or other authorization demonstrating such persons to sign the Signature Page on behalf of the LLC.**

ECONOMIC DISCLOSURE STATEMENT

SIGNATURE BY A LIMITED LIABILITY CORPORATION

(SECTION 8)

The Undersigned hereby certifies and warrants: that all of the statements, certifications and representations set forth in this EDS are true, complete and correct; that the Undersigned is in full compliance and will continue to be in compliance throughout the term of the Contract or County Privilege issued to the Undersigned with all the policies and requirements set forth in this EDS; and that all facts and information provided by the Undersigned in this EDS are true, complete and correct. The Undersigned agrees to inform the Chief Procurement Officer in writing if any of such statements, certifications, representations, facts or information becomes or is found to be untrue, incomplete or incorrect during the term of the Contract or County Privilege.

BUSINESS NAME: N/A

BUSINESS ADDRESS:_____

_____

BUSINESS TELEPHONE:_____ FAX NUMBER:_____

CONTACT PERSON:_____

FEIN:_____ *CORPORATE FILE NUMBER:_____

MANAGING MEMBER:_____ MANAGING MEMBER:_____

**SIGNATURE OF MANAGER:_____

ATTEST:_____

Subscribed to and sworn before me

this ____ day of _____, 20_____.

X_____ _____

Notary Public Signature **Notary Seal**

*** If the LLC is not registered in the State of Illinois, a copy of a current Certificate of Good Standing from the state of incorporation must be submitted with this Signature Page.**

**** Attach either a certified copy of the by-laws, articles, resolution or other authorization demonstrating such persons to sign the Signature Page on behalf of the LLC.**

ECONOMIC DISCLOSURE STATEMENT

SIGNATURE BY A LIMITED LIABILITY CORPORATION

(SECTION 8)

The Undersigned hereby certifies and warrants: that all of the statements, certifications and representations set forth in this EDS are true, complete and correct; that the Undersigned is in full compliance and will continue to be in compliance throughout the term of the Contract or County Privilege issued to the Undersigned with all the policies and requirements set forth in this EDS; and that all facts and information provided by the Undersigned in this EDS are true, complete and correct. The Undersigned agrees to inform the Chief Procurement Officer in writing if any of such statements, certifications, representations, facts or information becomes or is found to be untrue, incomplete or incorrect during the term of the Contract or County Privilege.

BUSINESS NAME: N/A

BUSINESS ADDRESS:_____

BUSINESS TELEPHONE:_____ FAX NUMBER:_____

CONTACT PERSON:_____

FEIN:_____ *CORPORATE FILE NUMBER:_____

MANAGING MEMBER:_____ MANAGING MEMBER:_____

**SIGNATURE OF MANAGER:_____

ATTEST:_____

Subscribed to and sworn before me

this ____ day of _____, 20_____.

X_____ _____

Notary Public Signature **Notary Seal**

*** If the LLC is not registered in the State of Illinois, a copy of a current Certificate of Good Standing from the state of incorporation must be submitted with this Signature Page.**

**** Attach either a certified copy of the by-laws, articles, resolution or other authorization demonstrating such persons to sign the Signature Page on behalf of the LLC.**

CONTRACT NO. 1445-14222

ECONOMIC DISCLOSURE STATEMENT

SIGNATURE BY A CORPORATION

(SECTION 9)

The Undersigned hereby certifies and warrants: that all of the statements, certifications and representations set forth in this EDS are true, complete and correct; that the Undersigned is in full compliance and will continue to be in compliance throughout the term of the Contract or County Privilege issued to the Undersigned with all the policies and requirements set forth in this EDS; and that all facts and information provided by the Undersigned in this EDS are true, complete and correct. The Undersigned agrees to inform the Chief Procurement Officer in writing if any of such statements, certifications, representations, facts or information becomes or is found to be untrue, incomplete or incorrect during the term of the Contract or County Privilege.

BUSINESS NAME: **Affiliated Steam Equipment Company**

BUSINESS ADDRESS: **12424 South Lombard Lane**

Alsip, IL 60803

BUSINESS TELEPHONE: **708-371-0600** FAX NUMBER: **708-371-0670**

CONTACT PERSON: **Don Howley**

FEIN: **36-2392793** *CORPORATE FILE NUMBER: **38058568**

PLEASE LIST THE FOLLOWING OFFICERS:

PRESIDENT: VICE PRESIDENT:

SECRETARY: TREASURER:

****SIGNATURE OF PRESIDENT:** Arthur C Lee

ATTEST: Dawn L. Lee **(CORPORATE SECRETARY)**

Subscribed to and sworn before me

this 17th day of December, 2014.

X Kim Marie Rackos

Notary Public Signature

My commission expires: 3-24-16

"OFFICIAL SEAL"
Kim Marie Rackos
Notary Public, State of Illinois
My Commission Expires 3/24/2016

Notary Seal

***If the corporation is not registered in the State of Illinois, a copy of the Certificate of Good Standing from the state of incorporation must be submitted with this Signature Page.**

****In the event that this Signature Page is signed by any persons than the President and Secretary, attach either a certified copy of the corporate by-laws, resolution or other authorization by the corporation, authorizing such persons to sign the Signature Page on behalf of the corporation.**

SPRAY FLOW II

.005 CC/LITER ATMOSPHERIC DEAERATOR

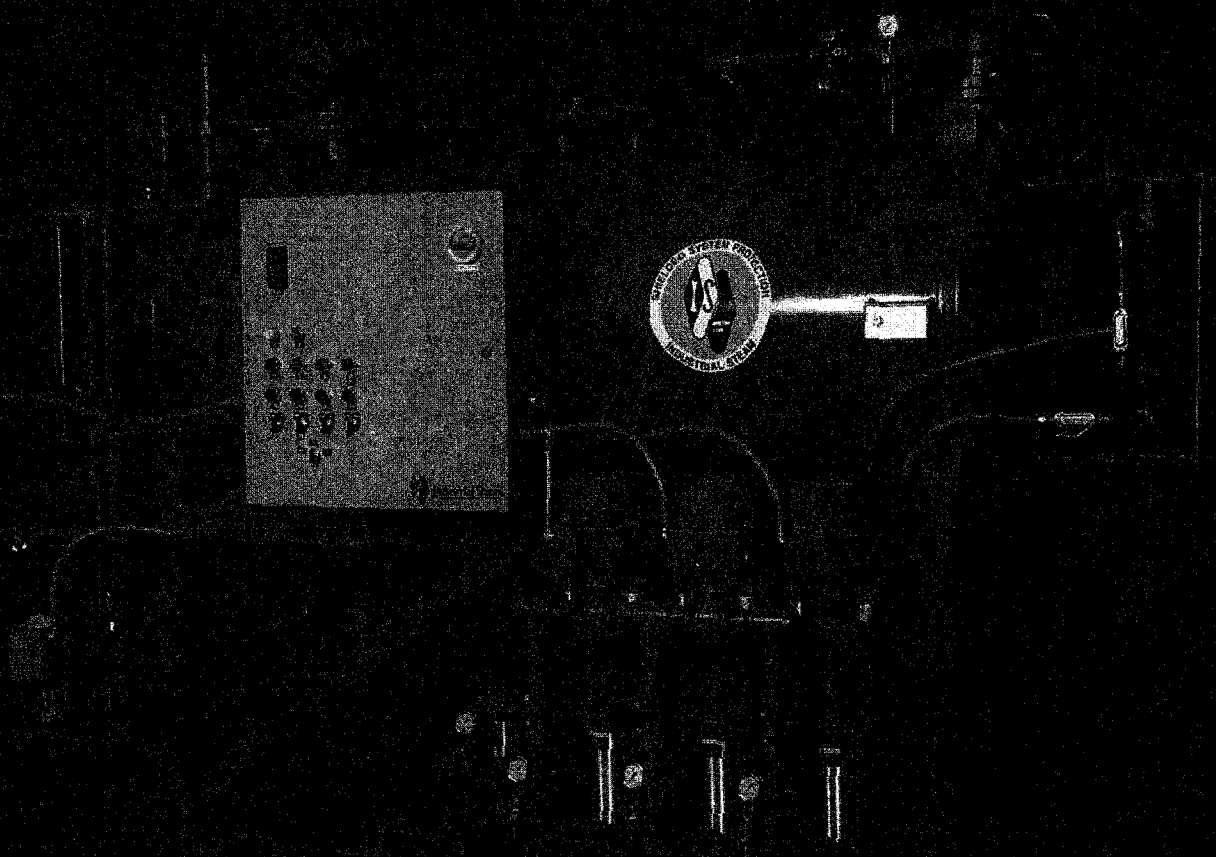

INDUSTRIAL STEAM

COMPONENTS AND SIZING

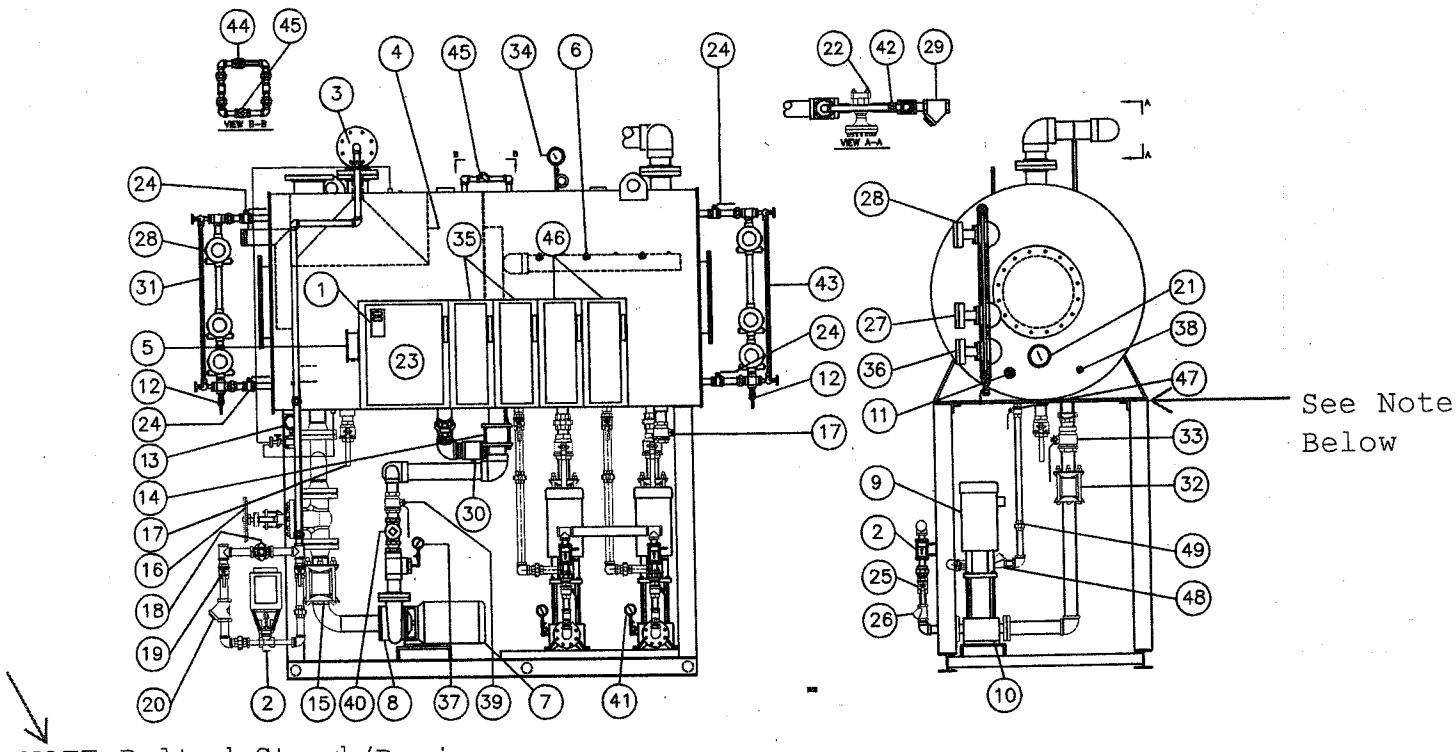

NOTE: Bolted Stand / Reciever

1 Make-up Controller
2 Make-up Control Valve
3 Make-up Nozzle (Stn. Stl.)
4 Vent Condenser (Stn. Stl.)
5 Pressure Switch
6 Spray Nozzles
7 Recycle Pump Motor
8 Recycle Pump
9 Boiler Feed Pump Motor
10 Boiler Feed Pump
11 Magnesium Anode
12 Ball Valve (Column Drain)
13 Level Transmitter
14 Coupling (Recycle Pump Discharge)
15 Coupling (Recycle Pump Suction)
16 Gate Valves (Recycle Pump Suction)
17 Ball Valves (Drain)
18 Globe Valve (Make-up Inlet)
19 Ball Valves (Make-up Inlet)
20 Y-Strainer (Make-up Inlet)
21 Thermometer w/ Thermowell
22 Temp Control Valve
23 Control Panel (NEMA 1)
24 Ball Valve (Column Isolation)
25 Ball Valve (Discharge)
26 Check Valve (Discharge)
27 Low Water Alarm
28 High Water Alarm Switch
29 Y-Strainer (Steam Inlet)
30 Emergency By-pass Valve
31 Gauge Glass Assembly
32 Couplings (BF Pump Suction)
33 Ball Valve (BF Pump Suction)
34 Pressure Gauge w/Cock (0/60in H_2O)
35 Starter (Recycle Pump)
36 Low Water Cut Off Switch
37 Pressure Gauge (0-60 psig)
38 Chemical Feed Quill
39 Gate Valve (Recycle Discharge)
40 Check Valve (Recycle Discharge)
41 Pressure Gauge 0/300 psi
42 Orifice Union
43 Gauge Glass Assembly
44 Ball Valve (Vacuum Breaker Line)
45 Vacuum Breaker (Check Valve)
46 Starter (BF Pump)
47 Ball Valve (Recirc)
48 Check Valve (Recirc)
49 Orifice Union (Recirc)

MODEL NUMBER	RATED CAPACITY		RECEIVER SIZE D&L	SYSTEM CAP. TO OVERFLOW		RECYCLE PUMP		APPROX OVERALL DIMENSIONS			APPROX SHIPPING WEIGHT**
	LBS/HR	HP	INCHES	GALS	MIN.	GPM	HP	HEIGHT*	L	W	
1SP5II	3,450	100	30 x 72	220	31.8	10	3/4	90	84	42	1,600
2SP5II	6,900	200	30 x 96	290	21	20	3/4	90	108	42	1,800
3SP5II	10,350	300	36 x 96	424	20.2	30	3/4	96	108	48	2,000
4SP5II	13,800	400	36 x 96	424	15.3	40	3/4	96	108	48	2,000
5SP5II	17,250	500	42 x 96	576	16.7	45	3	102	108	54	2,620
6SP5II	20,700	600	42 x 96	576	13.9	50	3	102	108	54	2,620
7SP5II	24,150	7000	48 x 96	750	15.5	70	3	106	108	60	3,270
8SP5II	27,600	800	48 x 96	750	13.6	80	3	106	108	60	3,270
10SP5II	34,500	1000	54 x 96	900	12.9	90	3	110	108	66	4,010
12SP5II	41,400	1200	54 x 120	1130	13.4	100	3	110	144	66	4,330
15SP5II	51,750	1500	60 x 120	1390	13.2	135	3	116	144	72	5,275
18SP5II	62,100	1800	60 x 144	1660	13	170	5	116	156	72	5,300
21SP5II	72,450	2100	66 x 144	1900	13.5	185	5	124	156	78	6,770
24SP5II	82,800	2400	66 x 168	2320	13.8	200	5	124	156	78	6,900
30SP5II	100,000	3000	66 x 192	2650	12.6	275	7 1/2	124	204	78	7,540
36SP5II	125,000	3600	72 x 192	3210	12.7	315	7 1/2	130	204	84	9,300

Consult factory for systems above 300,000#/hr
* Overall height includes 48" stand.
** Shipping weight does not include boiler feed pumps or any optional equipment

SPRAY FLOW II .005 cc/LITER ATMOSPHERIC DEAERATOR

SPRAY FLOW II DEAERATOR

FEATURES

CONSTANT RECYCLING guarantees deaeration of all dissolved oxygen in excess of .005 cc/liter from 0% to 100% of deaerator capacity.

UNIQUE FULL PARTITION DESIGN accepts gravity returns to the atmospheric scrubbing section along with make-up and pumped returns. Deaerating section accepts trapped returns for preferential use of flash steam.

ELECTRONIC INSTRUMENTATION FOR MODULATING LEVEL control includes a HART compatible differential pressure transmitter, PID controller, and motorized control valve.

SEPARATE DEAERATING & MIXING SECTIONS offer a two stage continuous cycle which provides .005 cc/l deaerated water during all load conditions regardless of surges from the system.

ONLY STAINLESS STEEL components come in contact with undeaerated water.

ATMOSPHERIC NON-CODE VESSEL require no annual shutdown for inspection.

CUSTOM ENGINEERED PACKAGED SYSTEM includes boiler feedwater pumps and quality components to insure reliable service.

ADVANTAGES

Industrial Steam's exclusive constant recycling feature and the use of a partitioned receiver provide the advantages of a two-tank system as a single package. These advantages are available without the necessity for onsite erection or field installed piping. Expanded deaerating sections are standard for surge condensate loads.

GUARANTEED PERFORMANCE FROM 0% to 100% of capacity regardless of load conditions is unmatched by any other deaerator.

CUSTOM ENGINEERED PACKAGED SYSTEM results in a small foot print, minimal onsite installation costs, and a single source of responsibility for all major components.

OPERATION

Modulated make-up water is sprayed through a stainless steel spring loaded nozzle into a stainless steel internal vent condenser located in the scrubbing section. The nozzle produces a thin conical sheet of water which condenses the vapors while permitting oxygen to exit through the unrestricted atmospheric vent. Pumped low temperature returns are also sprayed through the nozzle. Gravity returns flow unrestricted to the scrubbing section.

The combined make-up and returns in the scrubbing section are heated with steam and recycled deaerated water from the deaerating section. Both the steam and deaerated water enter the scrubbing section through separate stainless steel manifolds. The perforated steam manifold provides jets of steam to vigorously scrub the major portion of the dissolved oxygen from the make-up, pumped returns, and gravity returns. The temperature in the scrubbing section is controlled at 210°F (at sea level), which assures the release of the majority of the dissolved oxygen without flash loss.

The scrubbing section water, which is nearly fully deaerated, is continuously recycled to the deaerating section where it is sprayed through stainless steel, wide-angle, full-cone nozzles. Steam enters the deaerating section in response to the temperature in the scrubbing section. Since the cycle is continuous, pure steam is always available for final deaeration. The last traces of oxygen are removed at the point of contact with the purest steam. Excess, fully deaerated water flows continuously from the deaerating section to the scrubbing section through the stainless steel recycle manifold. Trapped returns are piped to the deaerating section where the flash steam is preferentially used for final deaeration.

Since the recycle pump capacity exceeds the deaerator capacity by at least 25%, the deaerator is able to meet .005 cc/l. From zero to 100% load. This same feature also enables the deaerator to supply fully deaerated water to the boiler on start-up. Rapid load changes and on-off boiler feedwater controls, which are very troublesome for other atmospheric deaerators, will not affect the Spray Flow II's performance or operation.

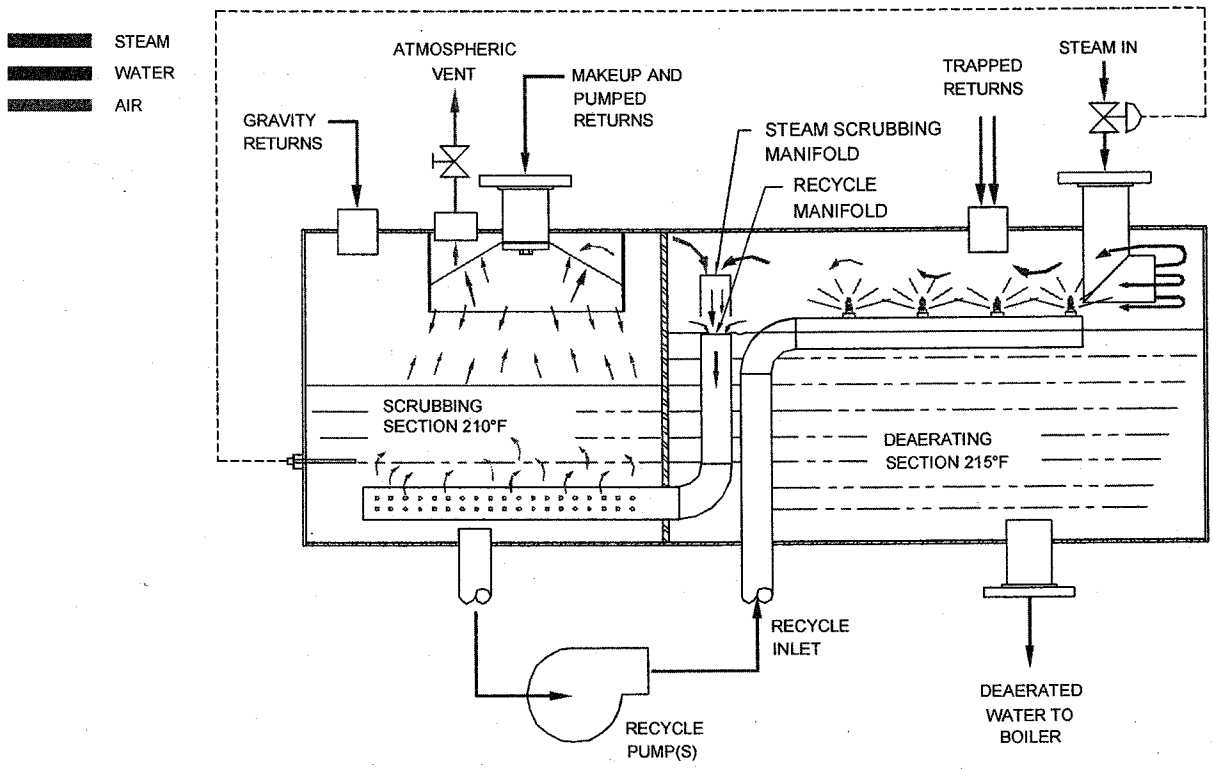

Additional Industrial Products

Steam Flow

.005 cc/Liter Pressurized
Recycling Deaerators

Tray ST5

.005 cc/Liter Pressurized
Tray-type Deaerators

Jet Spray

.005 cc/Liter Spray Type
Pressurized Deaerators

Blowdown Heat
Recovery Systems,
Blowdown Separators

Have questions or need help specifying this equipment?
Email: engineering@industrialsteam.com

Need help with an existing system or parts?
Email: techsupport@industrialsteam.com"

Looking for a local representative?
Email: sales@industrialsteam.com

Literature available for download at industrialsteam.com

INDUSTRIAL STEAM

1403 SW 7th Street, Atlantic, Iowa 50022 (888) 783-2615 TEL (712) 243-3440 FAX

CONTRACT NO. 1445-14222

ECONOMIC DISCLOSURE STATEMENT

COOK COUNTY SIGNATURE PAGE

(SECTION 10)

ON BEHALF OF THE COUNTY OF COOK, A BODY POLITIC AND CORPORATE OF THE STATE OF ILLINOIS, THIS CONTRACT IS HEREBY EXECUTED BY:

_____

COOK COUNTY CHIEF PROCUREMENT OFFICER

DATED AT CHICAGO, ILLINOIS THIS 30 DAY OF January, 20 15.

IN THE CASE OF A BID PROPOSAL, THE COUNTY HEREBY ACCEPTS:

THE FOREGOING BID/PROPOSAL AS IDENTIFIED IN THE CONTRACT DOCUMENTS FOR CONTRACT NUMBER

1445-14222

OR

ITEM(S), SECTION(S), PART(S):_____

TOTAL AMOUNT OF CONTRACT: $ 67,500.00

(DOLLARS AND CENTS)

FUND CHARGEABLE:_____

APPROVED AS TO FORM:

N/A

ASSISTANT STATE'S ATTORNEY

(Required on contracts over $1,000,000.00)