NOTICE TO BIDDERS, SPECIFICATIONS, CONTRACT AND CONTRACT BOND

FOR
HIGHWAY IMPROVEMENT
County of Cook, Illinois

Toni Preckwinkle
Cook County Board President

John Yonan, P.E.
Superintendent
Cook County Department of Transportation and Highways

Shannon E. Andrews
Chief Procurement Officer

Letting: April 23, 2014

PAVEMENT RESURFACING ENHANCEMENT PROGRAM – SOUTH 2014
COTTAGE GROVE – LINCOLN HIGHWAY TO GLENWOOD-LANSING ROAD
KEDZIE AVENUE – 158TH STREET TO 155TH STREET
STEGER ROAD – HARLEM AVENUE TO CICERO AVENUE
139TH STREET – COOPERS GROVE ROAD TO HARRISON AVENUE
SECTION NO.: 13-PREPS-01-RS

COOK COUNTY PROCUREMENT CONTRACT NO.:1428-13429

NOTICE TO PROSPECTIVE BIDDERS

The Specifications can be downloaded at http://198.65.148.209/purchasing/public/index.php (follow online instructions to register, if you have not already). When the plans are not included in the bid document, you must download the Plans (Drawings) at ftp://130.94.31.166/ (user name: highway; password ftpt3st)

APPROVED BY BOARD OF
COOK COUNTY COMMISSIONERS

JUN 18 2014

COM

Pre-Bid Meeting: Tuesday, April 8, 2014
11 a.m.
Cook County Department of Transportation and Highways
69 W. Washington Street, Suite 2260
Chicago, Illinois 60602

All questions are due on **Friday, April 11, 2014** no later than 3:00pm Chicago time

Send all questions via e-mails to: cho.ng@cookcountyil.gov

Bid Submitted by:

☑ Bid Bond is included ☐ A Cashier's Check or a Certified Check is Included

Name D. Construction, Inc. Phone No. (815) 634-2555

Address 1488 S. Broadway

City Coal City State IL Zip Code 60416

OFFICE OF THE CHIEF PROCUREMENT OFFICER
SHANNON E. ANDREWS
CHIEF PROCUREMENT OFFICER
118 North Clark Street, Room 1018 • Chicago, Illinois 60602 • (312) 603-5370

TONI PRECKWINKLE
PRESIDENT
Cook County Board of Commissioners

EARLEAN COLLINS
1st District

ROBERT STEELE
2nd District

JERRY BUTLER
3rd District

STANLEY MOORE
4th District

DEBORAH SIMS
5th District

JOAN PATRICIA MURPHY
6th District

JESUS G. GARCIA
7th District

EDWIN REYES
8th District

PETER N. SILVESTRI
9th District

BRIDGET GAINER
10th District

JOHN P. DALEY
11th District

JOHN A. FRITCHEY
12th District

LARRY SUFFREDIN
13th District

GREGG GOSLIN
14th District

TIMOTHY O. SCHNEIDER
15th District

JEFFREY R. TOBOLSKI
16th District

ELIZABETH ANN DOODY GORMAN
17th District

ADDENDUM NO. 1

April 17, 2014

Pavement Resurfacing Ehancement Program - South 2014

for
Cook County Department of Transportation and Highways

Contract No. 1428-13429

To: All Bidders of Record

A. General:

This addendum revises bid documents. This addendum is issued to bidder of record prior to execution of contract, and forms a part of contract documents and modifies previously issued documents. Insofar as previously issued contract documents are inconsistent with modifications indicated by this addendum, modifications indicated by this addendum shall govern. Where any part of the contract documents are modified by this addendum, all unaltered provisions shall remain in effect.

B. Bid Form:

Acknowledge receipt of this addendum in space provided on bid form. Failure to do so will subject bidder to disqualification.

C. Attachments:

The addendum includes attachments described in this addendum. One copy of each attachment is issued with this addendum, unless otherwise indicated. Check receipt of attachments issued with this addendum.

Attachment A: Special Provision Checklist - Page 11R
Attachment B: Estimated Quantities by Location - Page 179R
Attachment C: Schedule of Prices - Pages 213R and 214R
Attachment D: Bituminous Materials Cost Adjustments Special Provision 410 – 3 Pages
Attachment E: Pre-Bid Meeting Sign-In Sheet

D. Filing:

Insert attachments in respective contract document in correct sequence and location. Revise specification contents to reflect modifications of the addendum, as applicable.

E. Changes:

1. Change #1 – Page 11 of the Special Provision Checklist has been revised. The revised checklist is reflected on Page 11R (Attachment A) to include Special Provision 410 - Bituminous Materials Cost Adjustments (Attachment D).
2. Change #2 – Page 179 of the Estimated Quantities by Location has been revised to include quantity revision on item 47. The revision is reflected on Page 179R (Attachment B).
3. Change #3 – The estimated quantity on item 47 on the Schedule of Prices has been revised. The revised quantity is reflected on Pages 213R and 214R (Attachment C).
4. Change #4 – The contract now includes Special Provision 410 to provide bituminous material cost adjustments (Attachment D).

F. Responses to Questions

1. Question: Are the DBE Requirements 12% MBE & 5% WBE for this project or should they be per the table on Page 37 in the Bid Documents?

Response: The **MBE goal is 12%** and the **WBE goal is 5%** for this (project) contract. There is NO DBE goal for this contract and DBE certification is not acceptable for the purpose of meeting the MBE and WBE goals set forth for this project.

2. Question: Looks like the completion date is 2 years after the Notice to Proceed. Will the Work Orders all go one after another, or will they be at your discretion over the two year period?

Response: The work orders will be at the discretion of the County over the two-year period.

3. Question: Item #47 – Raised Reflective Pavement Marking has a quantity of 9,830 for Cottage Grove alone – may be a typing error.

Response: Yes, the quantity has been adjusted on Item #47. Revised Schedule of Prices and Estimated quantities by Location are included this Addendum 1.

4. Question: The area for Steger Road looks to be short given the length of the area is approx. 3 miles long. The 23,687 sy would back in to approx. 13.5' wide by the 3 mile stretch. A) Are they just doing one lane? B) Are the limits of the improvement shorter? C) Should the quantity increase?

Response: A) All pavement identified will be resurfaced full pavement width. B) No, but there will be omissions. C) No.

To further clarify, the limits on Steger Road will have omissions - the length will not be continuous. Specifically, the pavement on Steger east and west of Ridgeland Avenue was recently improved as part of the Ridgeland Avenue project resulting in an omission. Also, there will be an omission for the bridge over I-57. The exact limits/omissions will be identified in the work order.

ORIGINATED BY:
Cho Ng
Senior Contract Negotiator

SHANNON E. ANDREWS
CHIEF PROCUREMENT OFFICER

Contract 1428-13429
Addendum No. 1 -
Attachment E - Pre-Bid
Meeting Sign-In Sheet

Pre-Bid Mtg. Sign-In Sheet – April 8, 2014
69 W. Washington St., Suite 2260 11:00 AM
Contract # 1455-13427 – Pavement Resurfacing North
Contract 1428-13429 – Pavement Resurfacing South

"D" Construction, Inc. GENERAL CONTRACTOR 1488 SO. BROADWAY COAL CITY, ILLINOIS 60416 KEN WILHELMI Estimator/Project Manager ken.wilhelmi@dconstruction.net (815) 634-2555 FAX (815) 634-8748 MOBILE (815) 955-9940 K.Wilhelmi@dconstruction.net E-Mail: _____ Please print clearly	{Business Card}
IROQUOIS PAVING CORPORATION www.iroqpavcorp.com • 877.432.6211 1869 E US Hwy 24, Watseka, IL 60970 815-432-5211 • Fax: 815-432-5234 MICHAEL J. DROUSIAS *Estimating & Sales - Monee Area* CELL: 708-899-2189 • mike@iroqpavcorp.com INTERSTATE ASPHALT 5701 Industrial Drive, #1, Monee, IL 60449 708-534-8667 • Fax: 708-534-2896 557 E US Hwy 24, Gilman, IL 60938 815-265-4886	{Business Card}
ERIK A. SUNDQUIST ESTIMATOR esundquist@plote.com PLOTE CONSTRUCTION INC. ROAD BUILDING – SITE DEVELOPMENT www.plote.com 1100 BRANDT DRIVE<~~ELGIN~~, ILLINOIS ~~60120~~ 60192 847-695-9300 ~~Office 847-695-9300~~ DIRECT 847-628-6073 FAX 847-695-9317	{Business Card}
Attendee Name: MARK WARNECKE Company Name: Peter Baker & Son Company Address: Lake Bluff, IL Telephone: 847-362 3663 Fax: 847-362-0707 E-Mail: MARK@PeterBaker.com Please print clearly	{Business Card}

Table of Contents

Page No.	Special Provision No.	Description
1	*0 01	Cover Sheet
2		Table of Contents
4	*0 02	Notice Sheet
5		Special Provision Checklist
13	1a	MBE WBE Definition of Terms, Information for Bidders
17	2	Bidding Requirements and Conditions For Contract Proposals
22	3	Pre-Bid Meeting
23	4	Wages of Employees on Public Works
25	4b	Prevailing Wages for Cook County
35	5	Alternate Proposal/Ordinance
36	6	Responsible Bidder Requirement (Non-Federal Aid)
37	8b	MBE/WBE Business Participation
41	9	Specific Equal Employment Opportunity Responsibilities (Non-Federal Aid)
52	10	Insurance Requirements
56	11	Railroad Protective Liability Insurance
57	12a	Indemnification for Cook County
58	13	Joint Venture Forms
64	14	Addendum Receipt
65	16	Combination Bidding Process
67	17a	Prompt Pay Mechanisms (Non-Federal Aid)
68	401	General Project Information
69	402	Work Order Completion
71	402a	Sample Work Order
72	403	Coordination of Electrical Work
73	404	Temporary Ramps
74	23	Contract Claims
75	24	Pre-Construction Conference
76	25	Mobilization
77	26	Contract Extra Work
78	27	Construction Air Quality Diesel Vehicle Emissions Control (Green Construction Ordinance)
86	28	Processing of Extra Work Payment Requests
87	31	Engineer's Field Office
91	32	Construction Debris
92	33	Clean Construction and Demolition Debris
94	59	Survey Monuments
95	72	Cutting Hot-Mix Asphalt Surface
96	74	Temporary Butt Joints
97	171	Manholes to be Reconstructed, Special; Catch Basins to be Reconstructed, Special; Valve Vaults to be Reconstructed, Special
98	175	Lids and Frames and Lids
99	176	Frames and Lids to be Adjusted, Special
100	185	Cooperation With Utilities
102	194	Waterproofing of Existing Sanitary Manholes
103	211	Seeding
104	227	Work Zone Traffic Control Surveillance
105	231	Traffic Protection

Table of Contents

Page No.	Special Provision No.	Description
111	238	Raised Reflective Pavement Marker
112	405	(IDOT BDE) 26 Hot-Mix Asphalt – Density Testing of Longitudinal Joints
114	406	(IDOT D-1) HMA Mixture Design Requirement (D-1)
118	407	(IDOT D-1) Reclaimed Asphalt Pavement (RAP) and Reclaimed Asphalt Shingles (RAS) (D-1)
129	408	(IDOT D-1) Fine Aggregate for Hot-Mix Asphalt (HMA) (D-1)
130	409	(IDOT D-1) HMA Mixture IL-4.75 (D-1)
132		Standards and Details
176		Typical Cross Sections
177		Work Locations
178		Estmiated Quantities by Location
180	C	Proposal Sheet
181	E(MWBE)	MBE/WBE Economic Disclosure Statement: Instructions for Completion of Economic Disclosure Statement, IDOT Certificate of Eligibility, IDOT Affidavit of Availability, MBE/WBE Forms, Contractor Current Certifications, Required Disclosures, Ethics Disclosure Forms, Labor Standards & Prevailing Wage Requirements and Execution Pages
205	F	Surety's Statement Of Qualification for Bonding
206	G1	Trust Agreement
209	H	Performance and Payment of Bond Form
210	I	Contract
213	J	Schedule of Prices Sheets
215	K	Proposal Bid Bond
216	L	Bid Deposit Form

COUNTY OF COOK

CHICAGO, ILLINOIS
NOTICE

TO CONTRACTORS FOR A COOK COUNTY DEPARTMENT OF TRANSPORTATION AND HIGHWAYS IMPROVEMENT

Notice is hereby given that sealed bids for a Department of Transportation and Highways Improvement in the County of Cook, Illinois, as described below, will be received at Room 1018, County Building, and 118 North Clark Street, Chicago, Illinois until **10:00 a.m. Wednesday, April 23, 2014** and then publicly opened and read aloud.

Improvement: **PAVEMENT RESURFACING ENHANCEMENT PROGRAM – SOUTH 2014**
Section: **13-PREPS-01-RS** Route: **VARIOUS** Township: **VARIOUS**

Cottage Grove – Lincoln Highway to Glenwood-Lansing Road
Kedzie Avenue – 158th Street to 155th Street
Steger Road – Harlem Avenue to Cicero Avenue
139th Street – Coopers Grove Road to Harrison Avenue

Cook County Purchasing Contract No.: **1428-13429**

LOCATION OF IMPROVEMENT

The proposed improvements are part of the public highway system in the County of Cook, State of Illinois, located south of the Eisenhower Expressway (Interstate 290), and indicated on the map showing the County Highway System on file in the office of the County Clerk and also in the office of the Illinois Department of Transportation, Division of Highways, Springfield, Illinois.

Cottage Grove – Lincoln Highway to Glenwood-Lansing Road
Kedzie Avenue – 158th Street to 155TH Street
Steger Road – Harlem Avenue to Cicero Avenue
139th Street – Coopers Grove Road to Harrison Avenue

DESCRIPTION OF IMPROVEMENT

The improvement consists of furnishing all labor, materials and equipment required for Pavement Resurfacing Enhancement Program – South 2014. This includes but is not limited to hot-mix asphalt surface removal, hot-mix asphalt resurfacing, frame and lid adjustments, guardrail upgrades and maintenance, sidewalk removal and ADA compliant ramp replacement, traffic control and protection, pavement markings, restoration, and all appurtenant work required on a work order basis in Cook County, Illinois.

COOK COUNTY DEPARTMENT OF TRANSPORTATION AND HIGHWAYS
SPECIAL PROVISION CHECK LIST
EFFECTIVE Jan. 23, 2014 V 2014.1
PAVEMENT MAINTENANCE – SOUTH 2014
Limits: VARIOUS
Section: 13-PREPS-01-RS

	No.	Description	Origin and Date Last Revised
	1	Definition of Terms, Information for Bidders	(CC)Sept. 19, 2013
X	1a	MBE WBE Definition of Terms, Information for Bidders	(CC)Sept. 19, 2013
X	2	Bidding Requirements and Conditions For Contract Proposals	(IL-CC) Jan. 15, 2013
X	3	* Pre-Bid Meeting	(CC) Jan. 15, 2013
X	4	* Wages of Employees on Public Works	(IL-CC) Dec. 26, 2013
	4a	Davis Bacon Act (Federal Aid)	(FWH) Apr. 2009
X	5	Alternate Proposal/Ordinance	(CC) Dec. 28, 2011
X	6	Responsible Bidder Requirement (Non-Federal Aid)	(IL-CC) Dec. 28, 2011
	7	Required Contract Provisions (Federal Aid Only)	(IL-CC) Nov 5, 2013
	7a	FHWA 1273 Required Contract Provisions Federal-Aid Construction Contracts	(FHWA) May 1, 2012
	8a	* Required Disadvantaged Business Participation (DBE)	(IL-CC) July 15, 2013
X	8b	*MBE/WBE Business Participation	(CC) Apr. 19, 2013
X	9	Specific Equal Employment Opportunity Responsibilities (Non-Federal Aid)	(IL-CC) Jan. 15, 2013
X	10	Insurance Requirements	(CC) Dec. 26, 2013
	10a	Township Insurance Requirements	(CC) Jan. 15, 2013
X	11	* Railroad Protective Liability Insurance	(IL-CC) Dec. 26, 2013
X	12a	Indemnification for Cook County	(CC) Dec. 28, 2011
	12b	Indemnification (Locals)	(CC) Jan. 23, 2012
X	13	Joint Venture Forms	(CC) Jan. 15, 2013
X	14	Addendum Receipt	(CC) Dec. 28, 2009
	15	ARRA Provisions	(IL) Current
X	16	* Combination Bidding Process	(IL-CC) Jan. 15, 2013
X	17a	Prompt Pay Mechanisms (Non-Federal Aid)	(CC) Jan. 15, 2013
	17b	Prompt Pay Mechanisms (Federal Aid)	(FHWA) Current
	18-22	Not Used	
X	23	Contract Claims	(IL-CC) Jan. 15, 2013
X	24	Pre-Construction Conference	(CC) Mar. 18, 1980
X	25	Mobilization	(CC) Oct. 20, 2009
X	26	Contract Extra Work	(CC) Dec. 24, 2012
X	27	Construction Air Quality Diesel Vehicle Emissions Control (Green Construction Ordinance)	(CC) Jan. 15, 2013
X	28	Processing of Extra Work Payment Requests	(CC) Dec. 24, 2012
	29	Construction Layout Stakes and Survey Control Points	(CC) Jan. 15, 2013

	No.	Description	Origin and Date Last Revised
	30	* Municipal Coordination/Transfer of Jurisdiction and/or Maintenance	(CC) Jan. 15, 2013
X	31	Engineer's Field Office	(CC) Jan. 15, 2013
X	32	Construction Debris	(CC) July 1, 2006
X	33	*Clean Construction and Demolition Debris	(CC) Jan. 15, 2013
	34-44	Not Used	
	45	Portland Cement Concrete Pavement	(CC) July 1, 2012
	46	Managing Concrete Waste	(CC) Jan. 1, 2009
	47	Class B Patches, Special	(CC) Jan. 1, 2008
	48	Class C Patches, Special	(CC) Jan. 1, 2008
	49	Pavement Removal and Replacement (10Inch)	(CC) Jan. 1, 2008
	50	Dowel Bars	(CC) Jan. 1, 2008
	51	Structural Fiber Reinforced P.C. Concrete Bus Pad (4 Inch)	(CC) Jan. 1, 2008
	52	P.C.C. Bonded Overlay (4 Inch)	(CC) Jan. 1, 2007
	53	Diamond Grinding Concrete Pavement	(CC) Jan. 15, 2013
	54	Saw Cutting Concrete Overlay	(CC) Jan. 1, 2007
	55	Crack Routing and Sealing	(IL-CC) Jan. 1, 2008
	56	Hot-Mix Asphalt Surface Course, Rubber Modified	(CC) Jan. 1, 2008
	57	Rubberized Asphalt Material	(CC) Jan. 1, 2008
	58	Pavement Thickness Deficiency	(CC) Mar. 1, 2008
X	59	Survey Monuments	(CC) Jan. 15, 2013
	60	Soils Information	(CC) Jan. 15, 2013
	61	Stockpiled Embankment	(CC) July 1, 2012
	62	Borrow Excavation	(CC) July 1, 2000
	63	Crushed Stone (Temporary Use)	(CC) Jan. 1, 2008
	64	Aggregate Subgrade, (12 INCH)	(IL) Current
	65	Expanded Polystyrene Fill	(CC) Jan. 15, 2013
	66	Cellular Concrete Fill	(CC) July 1, 2006
	67	GEO-GRID Subgrade Reinforcing Mat	(CC) May 1, 2003
	68	Earth Excavation (Special)	(CC) Jan. 15, 2013
	69	P.C.C. Surface Finish	(CC) April 7, 2010
	70	Traffic Barrier Terminal, Type 1, Special	(IL-CC) Jan. 1, 2008
	71	*Scheduling and Landscaping	(CC) Jan. 1, 2008
X	72	Cutting Hot-Mix Asphalt Surface	(CC) Jan. 1, 2008
	73	Hot-Mix- Asphalt Driveway Surface Removal	(CC) July 1, 2012
X	74	Temporary Butt Joints	(CC) Jan. 1, 2008
	75	Hot-Mix Asphalt Stabilized Sub base	(CC) Jan. 1, 2008
	76	Hot-In-Place Asphalt Recycling by the Heater Scarifying Overlay Method	(CC) July 1, 2011
	77	Treatment of Cracks	(CC) Jan. 1, 2008

No.	Description	Origin and Date Last Revised
78	Strip Reflective Crack Control Treatment, Special	(CC) May 1, 2003
79	Cold Recycled In-Place Bituminous Base Course	(CC) Oct. 1, 2009
80	Temporary By-Pass Pavement (Non-Federal Aid)	(CC) Jan. 1, 2008
81	Temporary By-Pass Pavement (Federal Aid)	(CC) July 1, 2011
82	Reflective Crack Control Treatment	(CC) Jan. 1, 2012
83-116	Not Used	
117	Approach Slab Repair	(IL-CC) Oct. 4, 2011
118	Asbestos Waterproofing Membrane & Asbestos Hot-Mix-Asphalt Surface Removal (BDE)	(IL) Current
119	Not Used	
120	Segmental Concrete Block Walls	(IL) Current
121	Temporary Soil Retention System	(IL) Current
122	Steel Structures	(CC) Nov. 21, 2007
123	Not Used	
124	Cleaning and Painting Existing Steel Structures	(IL) Current
125	Containment and Disposal of Lead Paint Cleaning Residues	(IL) Current
126	Fine or Coarse Aggregate Embankment	(CC) Jan. 12, 2003
127	Strip Seal Joint Assembly with Elastomeric Concrete Headers	(CC) Oct. 3, 2011
128	Drainage System	(IL) Current
129	Grating	(CC) Jan. 15, 2013
130	Silicone Bridge Joint Sealer	(IL) Current
131	Not Used	
132	Deck Slab Repair	(IL) Current
133	Bridge Deck Latex Concrete Overlay	(IL) Current
134	Surface Finish	(IL-CC) Jan. 1, 2007
135-136	Not Used	
137	Welded Wire Fabric, Epoxy Coated	(CC) Nov. 21, 2007
138	Permanent Steel Sheet Piling	(IL) Current
139	Temporary Sheet Piling	(IL) Current
140	Precast Concrete Junction Chambers	(CC) Nov. 1, 2007
141	Jack and Remove Existing Bearings	(IL) Current
142	Jacking Existing Superstructure	(IL) Current
143	Junction Chamber	(CC) Jan. 1, 2007
144	Neoprene Expansion Joint Removal	(CC) Oct. 10, 1995
145	Structural Repair of Concrete	(IL) Current
146	Polymer Modified Portland Cement Mortar	(IL) Current
147	Concrete Wearing Surface for Use With Deck Beams	(IL) Current
148	Sheet Waterproofing Membrane System	(CC) Nov. 19, 1999

	No.	Description	Origin and Date Last Revised
	149	Chain Link Fence (Modified)	(CC) Jan. 1, 2004
	150-155	Not Used	
	156	Storm Sewer, (Ductile Iron Pipe) and Storm Sewers, (Extra Strength Vitrified Clay Pipe) in the City of Chicago	(CC) Oct. 20, 2009
	157	Water Main for Installation in the City of Chicago	(CC) Dec. 21, 2009
	158	Frames, City Electric in the City of Chicago	(CC) July 1, 2012
	159	Lids, City Electric in the City of Chicago	(CC) April 14, 2009
	160	Lids and Lids, ADA Compliant in the City of Chicago	(CC) April 14, 2009
	161	Various City Drainage and Utility Structure Adjustments in the City of Chicago	(CC) Dec. 21, 2009
	162	Storm Sewer Installation in the City of Chicago	(CC) Dec. 1, 2009
	163	Boring and Jacking Storm Sewers, Sanitary Sewers or Water Mains	(CC) Dec. 1, 2007
	164	Storm Sewers Jacked in Place (Over 36 In. Dia.)	(CC) Dec. 21, 2009
	165	Storm Sewer Drilled and Pushed (36 In. Dia. Max.)	(CC) Dec. 1, 2007
	166	Storm Sewers, Abandon and Fill	(CC) Jan. 15, 2013
	167	Storm Sewer to be Televised	(CC) July 1, 2012
	168	Connecting Existing Field Drain Tile	(CC) July 1, 2012
	169	Plugging Existing Drains and Sewers	(CC) Dec. 1, 2007
	170	Blocking Existing Drains and Sewers	(CC) Dec. 21, 2009
X	171	Manholes to be Reconstructed, Special; Catch Basins to be Reconstructed, Special; Valve Vaults to be Reconstructed, Special	(CC) Dec. 1, 2007
	172	Not Used	
	173	Manholes, Type A, with Restrictor Plate, Frames and Lids	(CC) July 1, 2012
	174	Not Used	
X	175	Lids and Frames and Lids	(CC) Jan. 15, 2013
X	176	Frames and Lids to be Adjusted, Special	(CC) Dec. 21, 2009
	177	Headwall Inlet and Grate	(CC) July 1, 2012
	178	Flared End Sections to be Removed, Flared End Sections to be Relocated	(CC) Dec. 30, 2008
	179	Bracing and Sheeting	(CC) Dec. 1, 2007
	180	Pavement Replacement	(CC) July 1, 2011
	181	Duck Bill Elastomeric Check Valve	(CC) July 1, 2012
	182	Catch Basin Oil and Debris Hoods	(CC) Jan. 15, 2013
	183	Frames and Lids to be Adjusted, Special (Pavement Recycling)	(CC) Jan. 1, 2013
	184	Not Used	
X	185	* Cooperation With Utilities	(CC) Feb. 10, 2012
	186	Water Valve Boxes to be Adjusted and Domestic Meter Vaults to be Adjusted	(CC) Dec. 21, 2009
	187	Domestic Water Service Boxes to be Adjusted	(CC) Dec. 21, 2009
	188	Filling Existing Valve Vaults	(CC) Dec. 21, 2009
	189	Valve Vaults to be Removed	(CC) Dec. 21, 2009

	No.	Description	Origin and Date Last Revised
	190	Water Main Installation	(CC) Dec. 1, 2009
	191	Fire Hydrants Vertical Adjustment	(CC) Dec. 21, 2009
	192	Sanitary Sewer Installation	(CC) July 1, 2012
	193	Sanitary Manholes	(CC) Dec. 21, 2009
X	194	Waterproofing of Existing Sanitary Manholes	(CC) July 1, 2012
	195-199	Not Used	
	200	Cleaning Existing Manholes, Catch Basins or Inlets and Cleaning Existing Storm Sewer and Pipe Culverts	(CC) Dec. 1, 2008
	201*	Not Used	
	202	* National Pollutant Discharge Elimination System	(CC) January 1, 2013
	203	Not Used	
	204	Maintaining Drainage and Stream Protection	(CC) Dec. 1, 2007
	205	Storm Water Pollution Separation System	(CC) July 1, 2012
	206	Storm Water Pollution Separation System (SPECIAL)	(CC) Dec. 1, 2007
	207	Storm Water Pollution Separation System (In-Line)	(CC) July 1, 2012
	208-210	Not Used	
X	211	Seeding	(CC) Sept. 1, 2002
	212	Sodding	(CC) Jan. 15, 2013
	213	Trees To Be Planted	(CC) Jan. 1, 2013
	214	Salvaging and Transplanting Trees; Salvaging and Transplanting Shrubs	(CC) Sept. 1, 2002
	215	Planting Woody Plants	(CC) Jan. 1, 1997
	216	Seeding, Fine Fescue Blend	(CC) Jan. 1, 2007
	217	Seeding, Class 4B Modified	(CC) Jan. 1, 2007
	218-226	Not Used	
X	227	Work Zone Traffic Control Surveillance	(IL) Current
	228	Traffic Control Devices – Detour Routing	(CC) July 1, 2012
	229	Modified Urethane Pavement Marking (BDE)	(IL) Current
	230	Sign Identification Decal	(CC) Jan. 15, 2013
X	231	Traffic Protection	(CC) July 1, 2012
	232-235	Not Used	
	236	Project Signs Plaque	(CC) Jan. 15, 2013
	237	Eradication of Existing Pavement Marking	(CC) Dec. 1, 2009
X	238	Raised Reflective Pavement Marker	(IL-CC) July 1, 2012
	239-240	Not Used	
	241	Traffic Signal Work General	(ILD1CC) Jan. 15, 2013
	242	Construction at Railroad Crossing	(CC) June 1, 2012
	243	Signal Head, Optically Programmed Signal Head and Pedestrian Signal Head	(CC) June 1, 2012
	244	Light Emitting Diode (LED) Traffic Signal	(ILD1CC) June 1, 2012

No.	Description	Origin and Date Last Revised
245	Light Emitting Diode (LED) Pedestrian Countdown Signal Head	(ILD1CC) June 1, 2012
246	Traffic Signal Backplate	(ILD1CC) June 1, 2012
247	Illuminated Sign, Light Emitting Diode	(ILD1CC) June 1, 2012
248	Traffic Signal Post, Pedestrian Pushbutton Post	(ILD1CC) June 1, 2012
249	Steel Mast Arm Assembly and Pole and/or Steel Combination Mast Arm Assembly and Pole	(ILD1CC) June 1, 2012
250	Traffic Actuated Controller, Traffic Actuated Controller with Cabinet, Inductive Loop Detector	(ILD1CC) Jan. 15, 2013
251	Master Controller	(ILD1CC) Jan. 15, 2013
252	Detector Loop	(ILD1CC) Jan. 15, 2013
253	Video Detection System For Temporary Traffic Signal Installation	(CC) June 1, 2012
254	Pedestrian Pushbutton	(ILD1CC) June 1, 2012
255	Conduit	(IL-CC) June 1, 2012
256	Coilable Non-Metallic Conduit	(ILD1CC) June 1, 2012
257	[illegible]	[illegible]
258	Electric Cable	(ILD1CC) June 1, 2012
259	Railroad Interconnect Cable	(ILD1CC) June 1, 2012
260	Fiber Optic Cable	(ILD1CC) June 1, 2012
261	System Ground and Grounding Cable	(ILD1CC) June 1, 2012
262	Grounding Existing Handhole Frame and Cover	(ILD1) Current
263	Service Installation, Pole Mounted	(ILD1CC) June 1, 2012
264	Service Installation, Ground Mounted	(ILD1CC) June 1, 2012
265	* Electric Service	(CC) Jan. 15, 2013
266	Handhole	(ILD1CC) June 1, 2012
267	Rebuild Existing Handhole, Rebuild Existing Heavy Duty Handhole, Rebuild Existing Double Handhole	(CC) June 1, 2012
268	Concrete Foundation	(ILD1CC) June 1, 2012
269	Modify Existing Type "D" Foundation	(CC) June 1, 2012
270	Remove Existing Traffic Signal Equipment	(ILD1CC) June 1, 2012
271	Temporary Traffic Signal Installation	(ILD1CC) Jan. 15, 2013
272	Maintenance of Existing Traffic Signal Installation	(ILD1CC) June 1, 2012
273	Emergency Vehicle Priority System	(ILD1CC) June 1, 2012
274	Relocate Existing Emergency Vehicle Priority System, Detector Unit	(CC) June 1, 2012
275	Relocate Existing Emergency Vehicle Priority System, Phasing Unit	(CC) June 1, 2012
276	Confirmation Beacon System	(CC) June 1, 2012
277	Re-Optimize Traffic Signal System	(ILD1CC) Jan. 15, 2013
278	Optimize Traffic Signal System	(ILD1CC) Jan. 15, 2013
279	Median Removal and Replacement	(CC) June 1, 2012
280	Sidewalk Removal and Replacement	(CC) June 1, 2012

Contract 1428-13429 - Addendum No. 1 - Attachment A: Special Provision Checklist

No.	Description	Origin and Date Last Revised
281	Relocate Existing Light Standard and Luminaire Complete in Place	(CC) Jan. 15, 2013
282	Maintenance Of Lighting System	(ILD1CC) June 1, 2012
283	City Electric Manholes to be Adjusted	(CC) June 1, 2012
284	Uninterruptible Power Supply (UPS)	(ILD1CC) June 1, 2012
285	Traffic Signal Cabinet Load Switch	(CC) June 1, 2012
286	Temporary Traffic Signal Timings	(ILD1CC) June 1, 2012
287	Combination Lighting and Traffic Signal Service Installation, Pole Mounted	(CC) June 1, 2012
288	Illuminated Street Name Sign	(ILD1CC) June 1, 2012
289	Relocate Existing Illuminated Street Name Sign	(CC) June 1, 2012
290	Video Detection System, Single Camera Processor Video Detection	(CC) June 1, 2012
291	Video Detection System, Complete Intersection	(CC) June 1, 2012
292	Not Used	
293	Uninterruptible Power Supply Without Cabinet	(CC) June 1, 2012
294	Modifying Existing Controller Cabinet	(ILD1CC) June 1, 2012
295-299	Not Used	

Additional Inserted Special Provisions (As Required)

- 004b Prevailing Wages for Cook County
- 401 General Project Information
- 402 Work Order Completion
- 402a Sample Work Order
- 403 Coordination of Electrical Work
- 404 Temporary Ramps
- 405 (IDOT BDE) Hot-Mix Asphalt – Density Testing of Longitudinal Joints
- 406 (IDOT D-1) HMA Mixture Design Requirement (D-1)
- 407 (IDOT D-1) Reclaimed Asphalt Pavement (RAP) and Reclaimed Asphalt Shingles (RAS) (D-1)
- 408 (IDOT D-1) Fine Aggregate for Hot-Mix Asphalt (HMA) (D-1)
- 409 (IDOT D-1) HMA Mixture IL-4.75 (D-1)
- 410 (IDOT BDE) Bituminous Materials Cost Adjustments

Additional Document Inclusions (Required)

*0 01	Cover Sheet	(CC) Oct. 8, 2013
*0 02	Notice Sheet	(CC) Jan. 15, 2013
*C	Proposal Sheet	(CC) Jan. 1, 2008
*E(DBE)	Economic Disclosure Statement Instructions, *DBE Documents, Contractor Certifications, Economic and Other Disclosures, FHWA Title 23 United States Code, Section 313 – Buy America, *Contractor's Certificate Concerning Labor Standards, *Sub-Contractor's Certificate Concerning Labor Standards, Execution Pages	(CC) Dec. 26, 2013
*E(MWBE)	MBE/WBE Economic Disclosure Statement Instructions for Completion of Economic Disclosure Statement, IDOT Certificate of Eligibility, IDOT Affidavit of Availability, MBE/WBE Forms, Contractor Current Certifications, Required Disclosures, Ethics Disclosure Forms, Labor Standards & Prevailing Wage Requirements and Execution Pages	(CC) Dec. 26, 2013
F	Surety's Statement Of Qualification for Bonding	(CC) June 2, 2011
*G1	Trust Agreement	(CC) Jan. 15, 2013
*H	Performance and Payment of Bond Form	(CC) June 9, 2011
*I	Contract	(CC) Jan. 15, 2013
*J	Schedule of Prices Sheets	(CC) Dec. 28, 2011
*K	Proposal Bid Bond	(CC) Jan. 15, 2013
*L	Bid Deposit Form	(CC) Jan. 15, 2013

* Special Provisions marked with an asterisk (*) have information that must be filled in prior to inclusion in the Contract Documents.

Origin of Special Provisions

(CC)	Initiated by Cook County Department of Transportation and Highways
(IL) Current	Initiated by Illinois Department of Transportation
(ILD1) Current	Initiated by Illinois Department of Transportation District 1
(IL-CC)	Initiated by the Illinois Department of Transportation and amended by Cook County Department of Transportation and Highways
(ILD1-CC)	Initiated by Illinois Department of Transportation District 1 and amended by Cook County Department of Transportation and Highways

Initiating Bureau/Division	Cook County Department of Transportation and Highways Special Provision Catalog Number
Contract Documents Office	1-20
Construction Bureau	21-40
Pavement Geometrics Division	41-114
Structural Division	115-155
Drainage Division	156-210
Landscaping Division	211-225
Transportation and Planning Bureau	226-240

BY ORDER

BOARD OF COUNTY COMMISSIONERS

THE COUNTY OF COOK

SHANNON E. ANDREWS

CHIEF PROCUREMENT OFFICER

JOHN J. YONAN, P.E.

SUPERINTENDENT OF DEPARTMENT OF TRANSPORTATION AND HIGHWAYS

DEFINITION OF TERMS

PLANS. The plans herein referred to are those prepared by the County Superintendent of Department of Transportation and Highways. The plans which cover the proposed improvement are designated by the section and route numbers inscribed herein and include all standard and special designs pertaining to the proposed improvement.

SPECIFICATIONS. The specifications herein referred to are the Standard Specifications for Road and Bridge Construction, Supplemental Specifications, the special provisions and all written agreements and documents of any description pertaining to the method or manner of performing the work and the quantity or quality of materials to be furnished under the contract. The Standard Specifications for Road and Bridge Construction are those prepared by the Department of Transportation of the State of Illinois, adopted January 1, 2012. The Supplemental Specifications are those prepared by the Department of Transportation of the State of Illinois.

INTENT OF PLANS AND SPECIFICATIONS. The intent of those plans and specifications is to prescribe a complete outline of the proposed improvement which the Contractor undertakes to construct in full compliance with the contract. In case of discrepancy, plans shall govern over Standard and Supplemental Specifications and Special Provisions shall govern over plans and specifications.

ABOUT REQUESTS FOR PLANS & PROPOSALS

The Specification can be downloaded at http://198.65.148.209/purchasing/bids/listallhighway.php (follow online instructions to register, if you have not already). When the plans are not included in the bid document on the http site, you must also download the Plans (Drawings) at ftp://130.94.31.166/ (user name: highway; password ftpt3st).

A compact disk containing the bid documents will be available at the Cook County Building, 118 North Clark Street, Chicago, IL 60602 at Room 1018. One compact disk per company at no charge.

INFORMATION for BIDDERS

1) If the prospective bidder is in doubt as to the meaning of any part of the plans, specifications of other proposed contract documents, they may submit a written clarification to the Chief Procurement Officer (CPO) for an interpretation thereof. The prospective bidder submitting the request will be responsible for the prompt delivery to the Chief Procurement Officer. Any interpretation of the proposal documents will be made by an addendum duly issued through the Cook County Purchasing website.

2) An estimate of quantities of work to be done and material to be furnished under the specifications will be found in the Schedule of Prices. It is the result of calculations and is given as a basis for a comparison of bids and award of a contract.

3) The bidder should include in the bid price in his bid for any taxes such as Occupational, Social Security, Unemployment Compensation, etc., which he might be required to pay in connection with the construction of the proposed improvement. The County of Cook will not reimburse the Contractor for the payment of any such taxes.

4) The Board of County Commissioners for the County of Cook reserves the right to reject any or all bids and to waive technicalities of form. Bids may be rejected if current work being performed for the County of Cook by the bidder has been unsatisfactory from the standpoint of workmanship or progress, or if the contractor has been awarded work by others subsequent to the issuance of the bid, which may, in the judgment of said Board of County Commissioners of Cook County endanger the prompt completion of the proposed improvement.

5) The bidder shall include in his bid a Bid Guarantee in accordance with provisions contained in the proposal form. The return of the bid guarantee will be in accordance with provisions contained in the bid form.

6) The bidder who submits the bid accepted by said Board of Cook County Commissioners shall execute a contract and furnish a satisfactory Surety Bond in the amount of one hundred percent (100%) of the contract price within **fourteen (14) days** after receiving notice of acceptance. Such acceptance being contingent upon the fulfillment of this requirement by said bidder. Failure on the part of said bidder to so execute a Contract and Surety Bond shall be considered just cause for the forfeiture of the bid guaranty as payment of liquidated damages sustained by the County of Cook as the result of such, and the annulment of acceptance of the proposal.

7) If bidder is submitting a bid as a Joint Venture, bidder shall complete the County's Joint Venture Forms and shall submit such Joint Venture Forms **when the bid is submitted**. Bidder is reminded that compliance with the Assumed Business Name Act (805 ILCS 405/1 et seq.) is required of all Joint Ventures.

8) **The following completed documents are to be submitted <u>with the Bid</u>:**

Joint Venture Forms	1 original
Economic Disclosure Statement and Execution Documents:	
IDOT Certificate of Eligibility	1 copy
IDOT Affidavit of Availability	1 copy
MBE/WBE Utilization Plan	1 copy
Letter of Intent from MBE/WBE to Perform as Subcontractor, Supplier and/or Consultant	1 copy
Petition for Reduction/Waiver of MBE/WBE Participation Goals	1 original
MBE/WBE Certification Letters (Current)	1 copy
Contractor Certifications	1 original
Economic and Other Required Disclosures	1 original
Lobby, Local Business Preference, Real Estate Ownership	1 original
Affidavit of Child Support Obligations	1 original
Disclosure of Ownership Interest Statement	1 original
Familial Relationship Disclosure Provision	1 original
Certification Concerning Labor Standards And Prevailing Wage Requirements	1 original
Subcontractors Certification Concerning Labor Standards and Prevailing Wage Requirements	1 original
Execution Pages:	
Sole Proprietor Signature Page	6 originals
Partnership and/or Joint Venture Signature Page	6 originals
Corporation Signature Page	6 originals
Bid Deposit Form	1 original
Proposal Bid Bond	1 original
Surety Statement of Qualifications	1 original

The following documents are to be submitted subsequent to notice of acceptance <u>within fourteen (14) calendar days</u>:

Performance and Payment Bond	1 original
Certificates of Insurance evidencing:	
Worker's Compensation and Employer's Liability	1 original
Commercial General Liability	1 original
Commercial Automobile Liability	1 original
Excess Liability	1 original
Contractor's Pollution Liability	1 original (if required)
Railroad Protective Liability (when applicable)	1 original & 1 certified copy
Trust Agreement	1 original

Please forward documents due within fourteen (14) days of notice of acceptance to:

Cook County Department of Transportation and Highways
Contract Documents
69 West Washington Street
Suite 2400
Chicago, IL 60602

SPECIAL PROVISION
FOR
BIDDING REQUIREMENTS AND CONDITIONS FOR CONTRACT PROPOSALS

Qualification of Bidders

The Awarding Authority for contract construction work is the County Board of a County. Each prospective bidder, in evidence of competence, shall furnish the Awarding Authority a certified copy of a "Certificate of Eligibility" issued by the Illinois Department of Transportation, and Contractor's Statement of Experience and Financial Condition" with their bid. Each prospective bidder shall furnish a sworn statement as to equipment owned and controlled, previous experience and construction work.

If the bidder to whom the award is made is a corporation organized under the laws of the State other than Illinois, the bidder shall furnish the Awarding Authority a copy of the corporation's Certificate of Authority to do business in the State of Illinois with the bid.

The bidder must provide the Awarding Authority a sworn Affidavit of Availability showing all uncompleted contracts awarded to them and all low bids pending award for Federal, State, County, Municipal and private work in the bid. The bidder should file two (2) copies of same with IDOT's District office.

Interpretation of Quantities in the Bid Schedule

The quantities appearing in the bid schedule are approximate and are prepared for the comparison of bids. Payment to the Contractor will be made only for the actual quantities of work performed and accepted or materials furnished according to the contract. The scheduled quantities of work to be done and materials to be furnished may be increased, decreased, or omitted as hereinafter provided.

Examination of Plans, Specifications, Special Provisions, and Site of Work

The bidder shall, before submitting a bid, carefully examine the provisions of the contract. The bidder shall inspect in detail the site of the proposed work, investigate and become familiar with all the local conditions affecting the contract and fully acquaint themselves with the detailed requirements of construction. Submission of a bid shall be a conclusive assurance and warranty the bidder has made these examinations and the bidder understands all requirements for the performance of the work. If the submitted bid is accepted, the bidder shall be responsible for all errors in the bid resulting from the bidder's failure or neglect to comply with these instructions. The Awarding Authority will, in no case, be responsible for any costs, expenses, losses, or change in anticipated profits resulting from such failure or neglect of the bidder to make these examinations.

The bidder shall take no advantage of any error or omission in the bid documents and advertised contract. Any prospective bidder who desires an explanation or interpretation of the plans, specification, or any of the contract documents shall request such in writing from the Awarding Authority in sufficient time to allow a written reply by the Awarding Authority that can reach all prospective bidders before the submission of their bids. Any reply given a prospective bidder concerning any of the contract documents, plans, and specifications will be furnished to all prospective bidders in the form determined by the Awarding Authority including, but not limited to, an addendum, if the information is deemed by the Awarding Authority to be necessary in submitting bids or if the Awarding Authority concludes the information would aid competition. Oral explanations, interpretations, or instructions given before the submission of bids unless at a prebid conference will not be binding on the Awarding Authority.

Changes in Improvement

The undersigned agrees that in case the Superintendent of Cook County Department of Transportation and Highways decides either to extend or decrease the area of the proposed improvement or to do both or otherwise alter it by extras or deductions including the elimination of any one or more of the quantities listed in the Schedule of Prices the undersigned will make such change in the contract price by adding or subtracting there from as the case may be by applying the respective unit prices to the quantities of the several items of work that may be involved by reason of such change.

Preparation of the Bid

Bidders shall submit their bids on the form furnished by the Awarding Authority. The bid shall be executed properly, and bids shall be made for all items indicated in the bid form, except when alternate bids are asked, a bid on more than one alternate for each item is not required, unless otherwise provided. The bidder shall indicate in figures, a unit price for each of the separate items called for in the bid form; the bidder shall show the products of the respective quantities and unit prices in the column provided for that purpose, and the gross sum shown in the place indicated in the bid form shall be the summation of said products. All writing shall be with ink or typewriter, except the signature of the bidder which shall be written in ink.

Any erasures or alterations in the unit prices and/or in the products of the respective quantities and unit prices in the bid, must be properly authenticated by the bidder by initialing in ink such erasures or alterations to avoid cause for rejection of the bid in accordance with Title 44 Illinois Administrative Code Chapter IX Section 660.180.

If the bid is made by an individual, that individual's name and business address shall be shown. If made by a firm or partnership, the name and business address of each member of the firm or partnership shall be shown. If made by a corporation, the bid shall show the names, titles, and business addresses of the president, corporate secretary and treasurer. The bid shall be signed by president or someone with authority to execute contracts and attest by the corporate secretary or someone with authority to execute or attest to the execution of contracts.

Rejection of Bids

The Awarding Authority reserves the right to reject any bids for any of the conditions listed below:

a) More than one bid for same work from an individual, firm partnership, or corporation under the same name or different names.

b) Evidence of collusion among bidders.

c) Unbalanced bids in which the bid prices for some items are, in the judgment of the Awarding Authority, out of proportion to the bid prices for other items.

d) If the bid does not contain a unit price for each pay item listed except in the case of authorized alternate pay items or lump sum pay items.

e) If the bid form is other than that furnished by the Awarding Authority; or if the form is altered or any part thereof is detached.

f) If there are omissions, erasures, alterations unauthorized additions, conditional or alternate bids, or irregularities of any kind which may tend to make the bid incomplete, indefinite or ambiguous as to its meaning.

g) If the bidder adds any provisions reserving the right to accept or reject an award, or to enter into a contract pursuant to an award.

h) If the proposal is not accompanied by the proper bid guaranty.

i) If the bid is prepared with other than ink or typewriter, or otherwise fails to meet the requirement of the above "Preparation of Proposal" section.

j) Lack of Competency and adequate machinery, plant, and other equipment, as revealed by the financial statement and experience questionnaires required in the prequalification procedures.

k) Uncompleted work which, in the judgment of the Awarding Authority, might hinder or prevent the prompt completion of additional work awarded.

l) False information provided on a bidder's "Affidavit of Availability".

m) Failure to pay, or satisfactorily settle, all bills due for labor and material on former contracts in force at the time of issuance of bid forms.

n) Failure to comply with any prequalification regulations of the Department.

o) Default under previous contracts.

p) Unsatisfactory performance record as shown by past work for the Awarding Authority, judged from the standpoint of workmanship and progress.

q) When the contractor is suspended from eligibility to bid at a public letting where the contract is awarded by, or requires approval of, the Department.

r) When any agent, servant, or employee of the prospective bidder currently serves as a member, employee, or agent of a governmental body that is financially involved in the proposal work.

s) When any agent, servant, or employee of the perspective bidder has participated in the preparation of plans or specifications for the proposed work.

Bid Guaranty

Each bid shall be accompanied by a bid bond on the Department form contained in the bid document, executed by a corporate surety company satisfactory to the Awarding Authority, by a bank cashier's check or a properly certified check for not less than five percent (5%) of the amount bid, or for the amount specified in the following schedule:

	Amount Bid	Proposal Guaranty
Up to	$5,000	$150
$5,000	$10,000	$300
$10,000	150,000	$1,000
$50,000	$100,00	$3,000
$100,000	$150,000	$5,000
$150,000	$250,000	$7,500
$250,000	$500,000	$12,500
$500,000	$1,000,000	$25,000
$1,000,000	$1,500,000	$50,000
$1,500,000	$2,000,000	$75,000
$2,000,000	$3,000,000	$100,000
$3,000,000	$5,000,000	$150,000
$5,000,000	$7,500,000	$250,000
$7,500,000	$10,000,000	$400,000
$10,000,000	$15,000,000	$500,000
$15,000,000	$20,000,000	$600,000
$20,000,000	$25,000,000	$700,000
$25,000,000	$30,000,000	$800,000
$30,000,000	$35,000,000	$900,000
Over	$35,000,000	$1,000,000

In the event that one proposal guaranty check is intended to cover two or more bids, the amount must equal to the sum of the bid guaranties, which would be required for each individual proposal.

Bank cashier's checks or properly certified checks accompanying bids shall be made payable to the County Treasurer, when a County is the Awarding Authority; or the City, Village, or Town Treasurer, when a city, village or town is the Awarding Authority.

The bid guaranty checks of all except the two (2) lowest responsible bidders will be returned promptly after the bids have been checked, tabulated, and the relation of the bids established. Bid guaranty checks of the two lowest responsible bidders will be returned as soon as the contract and contract bond of the successful bidder have been properly executed and approved. Bid bonds will not be returned.

After a period of three (3) working days has elapsed after the date of opening proposals, the Awarding Authority may permit the two lowest bidders to substitute for the banks cashier's checks or certified checks submitted with their bids as proposal guaranties, bid bonds on the Department forms executed by corporate surety companies satisfactory to the Awarding Authority.

Delivery of Bids

If a special envelope is supplied by the Awarding Authority, each bid should be submitted in that envelope furnished by the Awarding Authority and the blank spaces on the envelope shall be filled in correctly to clearly indicate its contents. When an envelope other than the special one furnished by the Awarding Authority is used, it shall be marked to clearly indicate its contents. When sent by mail, the sealed proposal shall be addressed to the Awarding Authority at the address and in care of the official in whose office the bids are to be received. All bids shall be filed prior to the time and at the place specified in the Notice to Bidders. Bids received after the time specified will be returned to the bidder unopened.

Withdrawal of Bids

Bidder may withdraw their bid prior to bid opening.

Public Opening of Bids

Bids will be opened and read publicly at the time and place specified in the Notice to Bidders. Bidders, their authorized agents, and other interested parties are invited to be present.

Consideration of Bids

After the bids are opened and read, they will be compared on the basis of the summation of the products of the quantities shown in the bid schedule by the unit bid prices. In awarding contracts, the Awarding Authority will, in addition to considering the amounts stated in the bids, take into consideration the responsibility of the various bidders as stated under "Rejection of Bids and documents submitted in the bid and from other investigations which it may elect to make.

The right is reserved to reject any or all bids, to waive technicalities, or to advertise from new bids, if in the judgment of the Awarding Authority, the best interests of the Awarding Authority will be promoted thereby.

Awarding of Contract

The award of contract will be made within 90 calendar days after the opening of bids to the lowest responsible and responsive qualified bidder whose bids complies with all the requirements prescribed. The successful bidder will be notified that their bid has been accepted, and subject to the following conditions, the bidder will be the Contractor. In addition, **the contractor shall provide all required insurance and bonding as specified within fourteen (14) calendar days from notice.**

An approved contract executed by the Awarding Authority is required before the Awarding Authority is bound. An award may be cancelled any time by the Awarding Authority prior to execution in order to protect the public interest and integrity of the bidding process or for any other reason, if the judgment of the Awarding Authority and/or the best interests of the Awarding Authority will be promoted thereby.

If a contract is not awarded within 90 days after the bid opening, bidders may file a written request with the Awarding Authority for the withdrawal of their bid, or agree to maintain their bid price.

Requirement of Contract Bond

The Contractor shall furnish the Awarding Authority a performance and payment bond with good and sufficient sureties in the full amount of the contract within **fourteen (14) calendar days** as part of the requirement. The surety shall be acceptable to the Awarding Authority, shall waive notice of any changes and extensions of time, and shall submit its bond on the form furnished by the Awarding Authority.

Failure to Execute Contract

If the contract is not executed by the Awarding Authority within 90 days from the bid opening, the bidder shall have the right to withdraw their bid without penalty.

Failure of the successful bidder to provide all required insurance and bonding within **fourteen (14) days after the award notification** shall be just cause for the cancellation of the award and the forfeiture of the bid guaranty which shall become the property of the Awarding Authority, not as penalty, but in liquidation of damages sustained. Award may then be made to the next lowest responsible bidder, or the work may be advertised again and constructed under contract, or otherwise, as the Awarding Authority may decide.

SPECIAL PROVISION
FOR
PRE-BID MEETING

Prospective bidders are advised that Pre-Bid Meeting will be held:

Date: **Tuesday, April 8, 2014**

Time: 11 a.m.

Place: Cook County Department of Transportation and Highways
69 W. Washington Street
Suite 2260
Chicago, IL 60602

SPECIAL PROVISION
FOR
WAGES OF EMPLOYEES ON PUBLIC WORKS

1. **Prevailing Wages.** All wages paid by the contractor and each subcontractor shall be in compliance with The Prevailing Wage Act (820 ILCS 130), as amended, except where a prevailing wage violates a federal law, order, or ruling, the rate conforming to the federal law, order, or ruling shall govern. The Illinois Department of Labor publishes the prevailing wage rates on its website at www.state.il.us/agency/idol/rates.rates.htm. If the Illinois Department of Labor revises the prevailing wage rates, the revised prevailing wage rates on the Illinois Department of Labor's website shall apply to this contract and the contractor will not be allowed additional compensation on account of said revisions. The contractor shall review the wage rates applicable to the work of the contract at regular intervals in order to ensure the timely payment of current wage rates. The contractor agrees that no additional notice is required. The contractor shall be responsible to notify each subcontractor of the wage rate set forth in this contract and any revisions thereto.

2. **Payroll Records.** The contractor and each subcontractor shall make and keep, for a period of not less than five years from the date of the last payment on a contract or subcontract, records of all laborers, mechanics, and other workers employed by them on the project; the records shall include information required by 820 ILCS 13/5 for each worker. Upon seven (7) business days' notice, the contractor and each subcontractor shall make available for inspection and copying at a location within this State during reasonable hours, the payroll records to the public body in charge of the project, its officers and agents, the Director of Labor and his deputies and agents, and to federal, State, or local law enforcement agencies and prosecutors.

3. **Submission of Payroll Records.** The contractor and each subcontractor shall, no later than the 15th day of each calendar month, file a certified payroll for the immediately preceding month with public body in charge of the project, except that the full social security number and home address shall not be included on weekly transmittals. Instead the payrolls shall include an identification number for each employee (E.g., the last four digits of the employee's social security). The certified payroll shall consist of a complete copy of the payroll records except starting and ending times of work each day may be omitted.

   The certified payroll shall be accompanied by a statement signed by the contractor or subcontractor or an officer, employee, or agent of the contractor or subcontractor which avers that: (i) he or she has examined the certified payroll records required to be submitted by the Act and such records are true and accurate; (ii) the hourly rate paid to each worker is not less than the general prevailing rate of hourly wages required: and (iii) the contractor or subcontractor is aware that filing a certified payroll that he or she knows to be false is a Class A misdemeanor.

   All certified payroll records required to be submitted pertaining to Cook County Department of Transportation and Highway contracts should be submitted to the following address:

   Chief Engineer – Construction Bureau
   Cook County Department of Transportation and Highways
   69 West Washington Street – 23rd Floor
   Chicago, IL 60602

4. **Employees Interviews.** The contractor and each subcontractor shall permit his/her employees to be interviewed on the job, during working hours, by compliance investigators of the Department of Labor.

Cook County Prevailing Wage for March 2014

(See explanation of column headings at bottom of wages)

Trade Name	RG	TYP	C	Base	FRMAN	M-F>8	OSA	OSH	H/W	Pensn	Vac	Trng
ASBESTOS ABT-GEN		ALL		37.100	37.600	1.5	1.5	2.0	13.38	9.520	0.000	0.500
ASBESTOS ABT-MEC		BLD		35.100	37.600	1.5	1.5	2.0	11.17	10.76	0.000	0.720
BOILERMAKER		BLD		44.240	48.220	2.0	2.0	2.0	6.970	17.54	0.000	0.350
BRICK MASON		BLD		41.580	45.740	1.5	1.5	2.0	9.700	12.80	0.000	1.040
CARPENTER		ALL		42.520	44.520	1.5	1.5	2.0	13.29	12.75	0.000	0.630
CEMENT MASON		ALL		42.350	44.350	2.0	1.5	2.0	12.16	12.35	0.000	0.430
CERAMIC TILE FNSHER		BLD		34.810	0.000	2.0	1.5	2.0	10.20	7.830	0.000	0.640
COMM. ELECT.		BLD		38.000	40.800	1.5	1.5	2.0	8.420	11.30	1.100	0.700
ELECTRIC PWR EQMT OP		ALL		44.850	49.850	1.5	1.5	2.0	10.63	14.23	0.000	0.450
ELECTRIC PWR GRNDMAN		ALL		34.980	49.850	1.5	1.5	2.0	8.290	11.10	0.000	0.350
ELECTRIC PWR LINEMAN		ALL		44.850	49.850	1.5	1.5	2.0	10.63	14.23	0.000	0.450
ELECTRICIAN		ALL		43.000	46.000	1.5	1.5	2.0	12.83	14.27	0.000	0.750
ELEVATOR CONSTRUCTOR		BLD		49.900	56.140	2.0	2.0	2.0	12.73	13.46	3.990	0.600
FENCE ERECTOR		ALL		34.840	36.840	1.5	1.5	2.0	12.86	10.67	0.000	0.300
GLAZIER		BLD		40.000	41.500	1.5	2.0	2.0	12.49	15.99	0.000	0.940
HT/FROST INSULATOR		BLD		46.950	49.450	1.5	1.5	2.0	11.17	11.96	0.000	0.720
IRON WORKER		ALL		42.070	44.070	2.0	2.0	2.0	13.45	19.59	0.000	0.350
LABORER		ALL		37.000	37.750	1.5	1.5	2.0	13.38	9.520	0.000	0.500
LATHER		ALL		42.520	44.520	1.5	1.5	2.0	13.29	12.75	0.000	0.630
MACHINIST		BLD		43.920	46.420	1.5	1.5	2.0	6.760	8.950	1.850	0.000
MARBLE FINISHERS		ALL		30.520	0.000	1.5	1.5	2.0	9.700	12.55	0.000	0.590
MARBLE MASON		BLD		40.780	44.860	1.5	1.5	2.0	9.700	12.71	0.000	0.740
MATERIAL TESTER I		ALL		27.000	0.000	1.5	1.5	2.0	13.38	9.520	0.000	0.500
MATERIALS TESTER II		ALL		32.000	0.000	1.5	1.5	2.0	13.38	9.520	0.000	0.500

MILLWRIGHT	ALL	42.520	44.520	1.5	1.5	2.0	13.29	12.75	0.000	0.630
OPERATING ENGINEER	BLD 1	46.100	50.100	2.0	2.0	2.0	16.60	11.05	1.900	1.250
OPERATING ENGINEER	BLD 2	44.800	50.100	2.0	2.0	2.0	16.60	11.05	1.900	1.250
OPERATING ENGINEER	BLD 3	42.250	50.100	2.0	2.0	2.0	16.60	11.05	1.900	1.250
OPERATING ENGINEER	BLD 4	40.500	50.100	2.0	2.0	2.0	16.60	11.05	1.900	1.250
OPERATING ENGINEER	BLD 5	49.850	50.100	2.0	2.0	2.0	16.60	11.05	1.900	1.250
OPERATING ENGINEER	BLD 6	47.100	50.100	2.0	2.0	2.0	16.60	11.05	1.900	1.250
OPERATING ENGINEER	BLD 7	49.100	50.100	2.0	2.0	2.0	16.60	11.05	1.900	1.250
OPERATING ENGINEER	FLT 1	51.300	51.300	1.5	1.5	2.0	15.70	10.55	1.900	1.250
OPERATING ENGINEER	FLT 2	49.800	51.300	1.5	1.5	2.0	15.70	10.55	1.900	1.250
OPERATING ENGINEER	FLT 3	44.350	51.300	1.5	1.5	2.0	15.70	10.55	1.900	1.250
OPERATING ENGINEER	FLT 4	36.850	51.300	1.5	1.5	2.0	15.70	10.55	1.900	1.250
OPERATING ENGINEER	FLT 5	52.800	51.300	1.5	1.5	2.0	15.70	10.55	1.900	1.250
OPERATING ENGINEER	HWY 1	44.300	48.300	1.5	1.5	2.0	16.60	11.05	1.900	1.250
OPERATING ENGINEER	HWY 2	43.750	48.300	1.5	1.5	2.0	16.60	11.05	1.900	1.250
OPERATING ENGINEER	HWY 3	41.700	48.300	1.5	1.5	2.0	16.60	11.05	1.900	1.250
OPERATING ENGINEER	HWY 4	40.300	48.300	1.5	1.5	2.0	16.60	11.05	1.900	1.250
OPERATING ENGINEER	HWY 5	39.100	48.300	1.5	1.5	2.0	16.60	11.05	1.900	1.250
OPERATING ENGINEER	HWY 6	47.300	48.300	1.5	1.5	2.0	16.60	11.05	1.900	1.250
OPERATING ENGINEER	HWY 7	45.300	48.300	1.5	1.5	2.0	16.60	11.05	1.900	1.250
ORNAMNTL IRON WORKER	ALL	42.900	45.400	2.0	2.0	2.0	13.11	16.40	0.000	0.600
PAINTER	ALL	40.750	45.500	1.5	1.5	1.5	10.75	11.10	0.000	0.770
PAINTER SIGNS	BLD	33.920	38.090	1.5	1.5	1.5	2.600	2.710	0.000	0.000
PILEDRIVER	ALL	42.520	44.520	1.5	1.5	2.0	13.29	12.75	0.000	0.630
PIPEFITTER	BLD	46.000	49.000	1.5	1.5	2.0	9.000	15.85	0.000	1.680
PLASTERER	BLD	41.250	43.730	1.5	1.5	2.0	11.10	11.69	0.000	0.550
PLUMBER	BLD	46.050	48.050	1.5	1.5	2.0	12.53	10.06	0.000	0.880
ROOFER	BLD	39.200	42.200	1.5	1.5	2.0	8.280	9.690	0.000	0.430

SHEETMETAL WORKER		BLD		41.210	44.510	1.5	1.5	2.0	10.48	19.41	0.000
0.660											
SIGN HANGER		BLD		30.210	30.710	1.5	1.5	2.0	4.850	3.030	0.000
0.000											
SPRINKLER FITTER		BLD		49.200	51.200	1.5	1.5	2.0	10.75	8.850	0.000
0.450											
STEEL ERECTOR		ALL		42.070	44.070	2.0	2.0	2.0	13.45	19.59	0.000
0.350											
STONE MASON		BLD		41.580	45.740	1.5	1.5	2.0	9.700	12.80	0.000
1.040											
SURVEY WORKER		ALL		37.000	37.750	1.5	1.5	2.0	12.97	9.930	0.000
0.500											
TERRAZZO FINISHER		BLD		36.040	0.000	1.5	1.5	2.0	10.20	9.900	0.000
0.540											
TERRAZZO MASON		BLD		39.880	42.880	1.5	1.5	2.0	10.20	11.25	0.000
0.700											
TILE MASON		BLD		41.840	45.840	2.0	1.5	2.0	10.20	9.560	0.000
0.880											
TRAFFIC SAFETY WRKR		HWY		28.250	29.850	1.5	1.5	2.0	4.896	4.175	0.000
0.000											
TRUCK DRIVER	E	ALL	1	33.850	34.500	1.5	1.5	2.0	8.150	8.500	0.000
0.150											
TRUCK DRIVER	E	ALL	2	34.100	34.500	1.5	1.5	2.0	8.150	8.500	0.000
0.150											
TRUCK DRIVER	E	ALL	3	34.300	34.500	1.5	1.5	2.0	8.150	8.500	0.000
0.150											
TRUCK DRIVER	E	ALL	4	34.500	34.500	1.5	1.5	2.0	8.150	8.500	0.000
0.150											
TRUCK DRIVER	W	ALL	1	32.550	33.100	1.5	1.5	2.0	6.500	4.350	0.000
0.000											
TRUCK DRIVER	W	ALL	2	32.700	33.100	1.5	1.5	2.0	6.500	4.350	0.000
0.000											
TRUCK DRIVER	W	ALL	3	32.900	33.100	1.5	1.5	2.0	6.500	4.350	0.000
0.000											
TRUCK DRIVER	W	ALL	4	33.100	33.100	1.5	1.5	2.0	6.500	4.350	0.000
0.000											
TUCKPOINTER		BLD		41.950	42.950	1.5	1.5	2.0	8.180	11.78	0.000
0.630											

Legend:

RG (Region)

TYP (Trade Type - All,Highway,Building,Floating,Oil & Chip,Rivers)

C (Class)

Base (Base Wage Rate)

FRMAN (Foreman Rate)

M-F>8 (OT required for any hour greater than 8 worked each day, Mon through Fri.

OSA (Overtime (OT) is required for every hour worked on Saturday)

OSH (Overtime is required for every hour worked on Sunday and Holidays)

H/W (Health & Welfare Insurance)

Pensn (Pension)

Vac (Vacation)

Trng (Training)

Explanations

COOK COUNTY

The following list is considered as those days for which holiday rates of wages for work performed apply: New Years Day, Memorial Day, Fourth of July, Labor Day, Thanksgiving Day, Christmas Day and Veterans Day in some classifications/counties. Generally, any of these holidays which fall on a Sunday is celebrated on the following Monday. This then makes work performed on that Monday payable at the appropriate overtime rate for holiday pay. Common practice in a given local may alter certain days of celebration. If in doubt, please check with IDOL.

TRUCK DRIVERS (WEST) - That part of the county West of Barrington Road.

EXPLANATION OF CLASSES

ASBESTOS - GENERAL - removal of asbestos material/mold and hazardous materials from any place in a building, including mechanical systems where those mechanical systems are to be removed. This includes the removal of asbestos materials/mold and hazardous materials from ductwork or pipes in a building when the building is to be demolished at the time or at some close future date.
ASBESTOS - MECHANICAL - removal of asbestos material from mechanical systems, such as pipes, ducts, and boilers, where the mechanical systems are to remain.

CERAMIC TILE FINISHER

The grouting, cleaning, and polishing of all classes of tile, whether for interior or exterior purposes, all burned, glazed or unglazed products; all composition materials, granite tiles, warning detectable tiles, cement tiles, epoxy composite materials, pavers, glass, mosaics, fiberglass, and all substitute materials, for tile made in tile-like units; all mixtures in tile like form of cement, metals, and

other materials that are for and intended for use as a finished floor surface, stair treads, promenade roofs, walks, walls, ceilings, swimming pools, and all other places where tile is to form a finished interior or exterior. The mixing of all setting mortars including but not limited to thin-set mortars, epoxies, wall mud, and any other sand and cement mixtures or adhesives when used in the preparation, installation, repair, or maintenance of tile and/or similar materials. The handling and unloading of all sand, cement, lime, tile, fixtures, equipment, adhesives, or any other materials to be used in the preparation, installation, repair, or maintenance of tile and/or similar materials. Ceramic Tile Finishers shall fill all joints and voids regardless of method on all tile work, particularly and especially after installation of said tile work. Application of any and all protective coverings to all types of tile installations including, but not be limited to, all soap compounds, paper products, tapes, and all polyethylene coverings, plywood, masonite, cardboard, and any new type of products that may be used to protect tile installations, Blastrac equipment, and all floor scarifying equipment used in preparing floors to receive tile. The clean up and removal of all waste and materials. All demolition of existing tile floors and walls to be re-tiled.

COMMUNICATIONS ELECTRICIAN

Installation, operation, inspection, maintenance, repair and service of radio, television, recording, voice sound vision production and reproduction, telephone and telephone interconnect, facsimile, data apparatus, coaxial, fibre optic and wireless equipment, appliances and systems used for the transmission and reception of signals of any nature, business, domestic, commercial, education, entertainment, and residential purposes, including but not limited to, communication and telephone, electronic and sound equipment, fibre optic and data communication systems, and the performance of any task directly related to such installation or service whether at new or existing sites, such tasks to include the placing of wire and cable and electrical power conduit or other raceway work within the equipment room and pulling wire and/or cable through conduit and the installation of any incidental conduit, such that the employees covered hereby can complete any job in full.

MARBLE FINISHER

Loading and unloading trucks, distribution of all materials (all stone, sand, etc.), stocking of floors with material, performing all rigging for heavy work, the handling of all material that may be needed for the installation of such materials, building of scaffolding, polishing if needed, patching, waxing of material if damaged, pointing up, caulking, grouting and cleaning of marble, holding water on diamond or Carborundum blade or saw for setters cutting, use of tub saw or any other saw needed for preparation of material, drilling of holes for wires that anchor material set by setters, mixing up of molding plaster for installation of material, mixing up thin set for the installation of material, mixing up of sand to cement for the installation of material and such other work as may be required in helping a Marble Setter in the handling of all material in the erection or installation of interior marble, slate, travertine, art marble, serpentine, alberene stone, blue stone,

granite and other stones (meaning as to stone any foreign or domestic materials as are specified and used in building interiors and exteriors and customarily known as stone in the trade), carrara, sanionyx, vitrolite and similar opaque glass and the laying of all marble tile, terrazzo tile, slate tile and precast tile, steps, risers treads, base, or any other materials that may be used as substitutes for any of the aforementioned materials and which are used on interior and exterior which are installed in a similar manner.

MATERIAL TESTER I: Hand coring and drilling for testing of materials; field inspection of uncured concrete and asphalt.

MATERIAL TESTER II: Field inspection of welds, structural steel, fireproofing, masonry, soil, facade, reinforcing steel, formwork, cured concrete, and concrete and asphalt batch plants; adjusting proportions of bituminous mixtures.

OPERATING ENGINEER - BUILDING

Class 1. Asphalt Plant; Asphalt Spreader; Autograde; Backhoes with Caisson Attachment; Batch Plant; Benoto (requires Two Engineers); Boiler and Throttle Valve; Caisson Rigs; Central Redi-Mix Plant; Combination Back Hoe Front End-loader Machine; Compressor and Throttle Valve; Concrete Breaker (Truck Mounted); Concrete Conveyor; Concrete Conveyor (Truck Mounted); Concrete Paver Over 27E cu. ft; Concrete Paver 27E cu. ft. and Under: Concrete Placer; Concrete Placing Boom; Concrete Pump (Truck Mounted); Concrete Tower; Cranes, All; Cranes, Hammerhead; Cranes, (GCI and similar Type); Creter Crane; Spider Crane; Crusher, Stone, etc.; Derricks, All; Derricks, Traveling; Formless Curb and Gutter Machine; Grader, Elevating; Grouting Machines; Heavy Duty Self-Propelled Transporter or Prime Mover; Highlift Shovels or Front Endloader 2-1/4 yd. and over; Hoists, Elevators, outside type rack and pinion and similar machines; Hoists, One, Two and Three Drum; Hoists, Two Tugger One Floor; Hydraulic Backhoes; Hydraulic Boom Trucks; Hydro Vac (and similar equipment); Locomotives, All; Motor Patrol; Lubrication Technician; Manipulators; Pile Drivers and Skid Rig; Post Hole Digger; Pre-Stress Machine; Pump Cretes Dual Ram; Pump Cretes: Squeeze Cretes-Screw Type Pumps; Gypsum Bulker and Pump; Raised and Blind Hole Drill; Roto Mill Grinder; Scoops - Tractor Drawn; Slip-Form Paver; Straddle Buggies; Operation of Tie Back Machine; Tournapull; Tractor with Boom and Side Boom; Trenching Machines.

Class 2. Boilers; Broom, All Power Propelled; Bulldozers; Concrete Mixer (Two Bag and Over); Conveyor, Portable; Forklift Trucks; Highlift Shovels or Front Endloaders under 2-1/4 yd.; Hoists, Automatic; Hoists, Inside Elevators; Hoists, Sewer Dragging Machine; Hoists, Tugger Single Drum; Laser Screed; Rock Drill (Self-Propelled); Rock Drill (Truck Mounted); Rollers, All; Steam Generators; Tractors, All; Tractor Drawn Vibratory Roller; Winch Trucks with "A" Frame.

Class 3. Air Compressor; Combination Small Equipment Operator; Generators; Heaters, Mechanical; Hoists, Inside Elevators (remodeling or renovation work); Hydraulic Power Units (Pile Driving, Extracting, and Drilling); Pumps, over 3" (1 to 3 not to exceed a total of 300 ft.); Low Boys; Pumps, Well Points; Welding Machines (2 through 5);

Winches, 4 Small Electric Drill Winches.

Class 4. Bobcats and/or other Skid Steer Loaders; Oilers; and Brick Forklift.

Class 5. Assistant Craft Foreman.

Class 6. Gradall.

Class 7. Mechanics; Welders.

OPERATING ENGINEERS - HIGHWAY CONSTRUCTION

Class 1. Asphalt Plant; Asphalt Heater and Planer Combination; Asphalt Heater Scarfire; Asphalt Spreader; Autograder/GOMACO or other similar type machines: ABG Paver; Backhoes with Caisson Attachment; Ballast Regulator; Belt Loader; Caisson Rigs; Car Dumper; Central Redi-Mix Plant; Combination Backhoe Front Endloader Machine, (1 cu. yd. Backhoe Bucket or over or with attachments); Concrete Breaker (Truck Mounted); Concrete Conveyor; Concrete Paver over 27E cu. ft.; Concrete Placer; Concrete Tube Float; Cranes, all attachments; Cranes, Tower Cranes of all types: Creter Crane: Spider Crane; Crusher, Stone, etc.; Derricks, All; Derrick Boats; Derricks, Traveling; Dredges; Elevators, Outside type Rack & Pinion and Similar Machines; Formless Curb and Gutter Machine; Grader, Elevating; Grader, Motor Grader, Motor Patrol, Auto Patrol, Form Grader, Pull Grader, Subgrader; Guard Rail Post Driver Truck Mounted; Hoists, One, Two and Three Drum; Heavy Duty Self-Propelled Transporter or Prime Mover; Hydraulic Backhoes; Backhoes with shear attachments up to 40' of boom reach; Lubrication Technician; Manipulators; Mucking Machine; Pile Drivers and Skid Rig; Pre-Stress Machine; Pump Cretes Dual Ram; Rock Drill - Crawler or Skid Rig; Rock Drill - Truck Mounted; Rock/Track Tamper; Roto Mill Grinder; Slip-Form Paver; Snow Melters; Soil Test Drill Rig (Truck Mounted); Straddle Buggies; Hydraulic Telescoping Form (Tunnel); Operation of Tieback Machine; Tractor Drawn Belt Loader; Tractor Drawn Belt Loader (with attached pusher - two engineers); Tractor with Boom; Tractaire with Attachments; Traffic Barrier Transfer Machine; Trenching; Truck Mounted Concrete Pump with Boom; Raised or Blind Hole Drills (Tunnel Shaft); Underground Boring and/or Mining Machines 5 ft. in diameter and over tunnel, etc; Underground Boring and/or Mining Machines under 5 ft. in diameter; Wheel Excavator; Widener (APSCO).

Class 2. Batch Plant; Bituminous Mixer; Boiler and Throttle Valve; Bulldozers; Car Loader Trailing Conveyors; Combination Backhoe Front Endloader Machine (Less than 1 cu. yd. Backhoe Bucket or over or with attachments); Compressor and Throttle Valve; Compressor, Common Receiver (3); Concrete Breaker or Hydro Hammer; Concrete Grinding Machine; Concrete Mixer or Paver 7S Series to and including 27 cu. ft.; Concrete Spreader; Concrete Curing Machine, Burlap Machine, Belting Machine and Sealing Machine; Concrete Wheel Saw; Conveyor Muck Cars (Haglund or Similar Type); Drills, All; Finishing Machine - Concrete; Highlift Shovels or Front Endloader; Hoist - Sewer Dragging Machine; Hydraulic Boom Trucks (All Attachments); Hydro-Blaster; Hydro Excavating (excluding hose work); Laser Screed; All Locomotives, Dinky; Off-Road Hauling Units (including articulating) Non Self-Loading Ejection Dump; Pump Cretes: Squeeze Cretes - Screw Type

Pumps, Gypsum Bulker and Pump; Roller, Asphalt; Rotary Snow Plows; Rototiller, Seaman, etc., self-propelled; Self-Propelled Compactor; Spreader - Chip - Stone, etc.; Scraper - Single/Twin Engine/Push and Pull; Scraper - Prime Mover in Tandem (Regardless of Size); Tractors pulling attachments, Sheeps Foot, Disc, Compactor, etc.; Tug Boats.

Class 3. Boilers; Brooms, All Power Propelled; Cement Supply Tender; Compressor, Common Receiver (2); Concrete Mixer (Two Bag and Over); Conveyor, Portable; Farm-Type Tractors Used for Mowing, Seeding, etc.; Forklift Trucks; Grouting Machine; Hoists, Automatic; Hoists, All Elevators; Hoists, Tugger Single Drum; Jeep Diggers; Low Boys; Pipe Jacking Machines; Post-Hole Digger; Power Saw, Concrete Power Driven; Pug Mills; Rollers, other than Asphalt; Seed and Straw Blower; Steam Generators; Stump Machine; Winch Trucks with "A" Frame; Work Boats; Tamper-Form-Motor Driven.

Class 4. Air Compressor; Combination - Small Equipment Operator; Directional Boring Machine; Generators; Heaters, Mechanical; Hydraulic Power Unit (Pile Driving, Extracting, or Drilling); Light Plants, All (1 through 5); Pumps, over 3" (1 to 3 not to exceed a total of 300 ft.); Pumps, Well Points; Vacuum Trucks (excluding hose work); Welding Machines (2 through 5); Winches, 4 Small Electric Drill Winches.

Class 5. SkidSteer Loader (all); Brick Forklifts; Oilers.

Class 6. Field Mechanics and Field Welders

Class 7. Dowell Machine with Air Compressor; Gradall and machines of like nature.

OPERATING ENGINEER - FLOATING

Class 1. Craft Foreman; Master Mechanic; Diver/Wet Tender; Engineer; Engineer (Hydraulic Dredge).

Class 2. Crane/Backhoe Operator; Boat Operator with towing endorsement; Mechanic/Welder; Assistant Engineer (Hydraulic Dredge); Leverman (Hydraulic Dredge); Diver Tender.

Class 3. Deck Equipment Operator, Machineryman, Maintenance of Crane (over 50 ton capacity) or Backhoe (115,000 lbs. or more); Tug/Launch Operator; Loader/Dozer and like equipment on Barge, Breakwater Wall, Slip/Dock, or Scow, Deck Machinery, etc.

Class 4. Deck Equipment Operator, Machineryman/Fireman (4 Equipment Units or More); Off Road Trucks; Deck Hand, Tug Engineer, Crane Maintenance (50 Ton Capacity and Under) or Backhoe Weighing (115,000 pounds or less); Assistant Tug Operator.

Class 5. Friction or Lattice Boom Cranes.

SURVEY WORKER - Operated survey equipment including data collectors, G.P.S. and robotic instruments, as well as conventional levels and transits.

TERRAZZO FINISHER

The handling of sand, cement, marble chips, and all other materials that may be used by the Mosaic Terrazzo Mechanic, and the mixing, grinding, grouting, cleaning and sealing of all Marble, Mosaic, and Terrazzo work, floors, base, stairs, and wainscoting by hand or machine, and in addition, assisting and aiding Marble, Masonic, and Terrazzo Mechanics.

TRAFFIC SAFETY

Work associated with barricades, horses and drums used to reduce lane usage on highway work, the installation and removal of temporary lane markings, and the installation and removal of temporary road signs.

TRUCK DRIVER - BUILDING, HEAVY AND HIGHWAY CONSTRUCTION - EAST & WEST

Class 1. Two or three Axle Trucks. A-frame Truck when used for transportation purposes; Air Compressors and Welding Machines, including those pulled by cars, pick-up trucks and tractors; Ambulances; Batch Gate Lockers; Batch Hopperman; Car and Truck Washers; Carry-alls; Fork Lifts and Hoisters; Helpers; Mechanics Helpers and Greasers; Oil Distributors 2-man operation; Pavement Breakers; Pole Trailer, up to 40 feet; Power Mower Tractors; Self-propelled Chip Spreader; Skipman; Slurry Trucks, 2-man operation; Slurry Truck Conveyor Operation, 2 or 3 man; Teamsters; Unskilled Dumpman; and Truck Drivers hauling warning lights, barricades, and portable toilets on the job site.

Class 2. Four axle trucks; Dump Crets and Adgetors under 7 yards; Dumpsters, Track Trucks, Euclids, Hug Bottom Dump Turnapulls or Turnatrailers when pulling other than self-loading equipment or similar equipment under 16 cubic yards; Mixer Trucks under 7 yards; Ready-mix Plant Hopper Operator, and Winch Trucks, 2 Axles.

Class 3. Five axle trucks; Dump Crets and Adgetors 7 yards and over; Dumpsters, Track Trucks, Euclids, Hug Bottom Dump Turnatrailers or turnapulls when pulling other than self-loading equipment or similar equipment over 16 cubic yards; Explosives and/or Fission Material Trucks; Mixer Trucks 7 yards or over; Mobile Cranes while in transit; Oil Distributors, 1-man operation; Pole Trailer, over 40 feet; Pole and Expandable Trailers hauling material over 50 feet long; Slurry trucks, 1-man operation; Winch trucks, 3 axles or more; Mechanic--Truck Welder and Truck Painter.

Class 4. Six axle trucks; Dual-purpose vehicles, such as mounted crane trucks with hoist and accessories; Foreman; Master Mechanic; Self-loading equipment like P.B. and trucks with scoops on the front.

Other Classifications of Work:

For definitions of classifications not otherwise set out, the Department generally has on file such definitions which are available. If a task to be performed is not subject to one of the classifications of pay set out, the Department will upon being contacted state which neighboring county has such a classification and provide such rate, such rate being deemed to exist by reference in this document. If no neighboring county rate applies to the task, the Department shall undertake a special determination, such special

determination being then deemed to have existed under this determination. If a project requires these, or any classification not listed, please contact IDOL at 217-782-1710 for wage rates or clarifications.

LANDSCAPING

Landscaping work falls under the existing classifications for laborer, operating engineer and truck driver. The work performed by landscape plantsman and landscape laborer is covered by the existing classification of laborer. The work performed by landscape operators (regardless of equipment used or its size) is covered by the classifications of operating engineer. The work performed by landscape truck drivers (regardless of size of truck driven) is covered by the classifications of truck driver.

MATERIAL TESTER & MATERIAL TESTER/INSPECTOR I AND II

Notwithstanding the difference in the classification title, the classification entitled "Material Tester I" involves the same job duties as the classification entitled "Material Tester/Inspector I". Likewise, the classification entitled "Material Tester II" involves the same job duties as the classification entitled "Material Tester/Inspector II".

SPECIAL PROVISION
FOR
ALTERNATE PROPOSAL

The Bidder certified that this bid and the unit prices shown on the schedule of prices are based on performing the work in accordance with "An Act Regulating the Wages of Laborers, Mechanics and other Workers employed under contracts for Public Works" enacted by the 62nd General Assembly and approved June 26, 1941, as amended. Should said "Act" be declared inoperative, void or unconstitutional at any time, either before or after the awarding of the contract for this project, the bidder agrees to perform the work at a reduction of — 0 — per cent, of the unit prices shown on the schedule of prices, it being expressly understood and agreed that the within bid shall be and remain in full force and effect, regardless of whether the said "Act" is declared to be inoperative, void or unconstitutional. The contract for this project is to be awarded on the bases of the unit prices shown on the schedule of prices, and the percentage reduction, if any, act out in this alternative proposal, is to receive no consideration in the award of this contract.

Should the said "Act" be declared inoperative, void or unconstitutional at any time after the awarding of said contract, whether before, during or after the completion of the work, the said contract shall remain in full force and effect, and shall be subject only to said reduction, if any, in the unit prices shown on the schedule of prices.

NOTE: The Bidder shall insert in the first paragraph the percentage which he will reduce his unit prices, if any, in the event the Act is declared inoperable, void or unconstitutional.

ORDINANCE

****

BE IT ENACTED BY THE BOARD OF COMMISSIONERS OF THE COUNTY OF COOK, that the Chief Procurement Officer of Cook County shall specify in the call for bids in any contract for public works that such contractors bidding on public works contracts of the County of Cook shall conform to Illinois Compiled Statutes, Chapter 30, Section 560/1 and following, which Act is entitled "An Act" to give preference in the construction of public works projects and improvements to citizens of the United States who have resided in Illinois for one year". The Chief Procurement Officer of Cook County in awarding the contract shall cause to be inserted in the contract a stipulation to the effect that the contractor shall conform to the above cited Illinois Statute.

MINORITY AND WOMEN BUSINESS ENTERPRISES
COOK COUNTY ORDINANCE CHAPTER 34, DIVISION 8, SECTION 34-260 to SECTION 34-300

I. POLICY AND GOALS

A. It is the policy of the County of Cook to prevent discrimination in the award of or participation in County contracts and to eliminate arbitrary barriers for participation, as both prime and sub-contractors, in such contracts by local businesses certified as Minority Business Enterprises (MBE) and Women owned Business Enterprises (WBE). In furtherance of this policy, the Cook County Board of Commissioners has adopted a Minority and Women owned Business Enterprise Ordinance (the "Ordinance") which establishes goals as outlined below:

Contract Type	Goals	
	MBE	WBE
Goods and Services	25%	10%
Construction	24%	10%
Professional Services	35% Overall	

B. **The County may set contract specific goals for each contract, based on the commodities or services specified in this bid document. The MBE/WBE percentages required for this contract are 12% MBE and 5% WBE**. A Bid or Quotation shall be rejected if the County determines that a Bid or Quotation fails to comply with this provision, including but not limited to, commitments to achieve for this contract, the MBE/ WBE goals of the contract amount or to include a Petition for Reduction/Waiver documenting why the goals are not attainable despite the contractor's Good Faith Efforts. A Bid or Quotation may be rejected and a new Bid or Quotation may be solicited if the public interest is served thereby. Unless otherwise specified in the Bid or Quotation Documents, for purposes of this provision, the contract amount is the amount that has been entered on the Proposal page of the Bid or Quotation Documents.

C. Except to the extent that a Bid or Quotation includes a Reduction/Waiver request, the contract MBE and WBE participation goals may be achieved by the Bid or Quotation entities' status as a MBE or WBE; by entering into a joint venture with one or more MBEs and/or WBEs; by subcontracting a portion of the work to one or more MBEs and WBEs; by establishing and carrying out a mentor/protégé agreement; by the Indirect Participation of one or more MBEs and WBEs used by the entity submitting a Bid or Quotation in other aspects of its business; or by any combination of the foregoing so long as the Utilization Plan evidences a commitment to the MBE and WBE contract goals set forth in (B) above.

D. The same Business Enterprise, whether as a contractor, subcontractor or supplier, cannot be utilized as both a MBE and a WBE on the same contract.

E. To the extent that the Ordinance does not apply to this Bid or Quotation, unless specifically waived in the Bid or Quotation Documents, this provision and the wording of the Ordinance shall apply. If there is a conflict between this provision and the Ordinance or the wording of the Ordinance, the Ordinance or its wording controls.

F. A Contractor's failure to carry out its commitments in the course of the Contract's performance shall constitute a material breach of the Contract and if such breach is not appropriately cured, may result in the termination of the Contract or such remedy authorized by the Ordinance as the County deems appropriate.

MINORITY AND WOMEN BUSINESS ENTERPRISES
COOK COUNTY ORDINANCE CHAPTER 34, DIVISION 8, SECTION 34-260 to SECTION 34-300

II. REQUIRED BID OR QUOTATION SUBMITTALS

To be considered responsive, a Bid or Quotation shall meet the MBE and WBE goals by submitting a Utilization Plan with the Bid or Quotation, which shall be (1) supported by Letters of Intent from the MBEs and WBEs together with the MBEs/WBEs **current** Letters of Certification, and/or (2) include a written Petition for Reduction/Waiver with the Bid or Quotation supported by documentation of Good Faith Efforts to meet the goals. Failure to submit the documents set forth in (A) and (B) of this Section II in accordance with these guidelines will cause the Bid or Quotation to be considered non-responsive and shall be cause to reject the Bid or Quotation.

A. MBE/WBE Utilization Plan

Each Bid or Quotation shall include with the Bid or Quotation a complete Utilization Plan. The Utilization Plan shall list the names, mail and email addresses, telephone number and contact persons of businesses intended to be used as MBEs and WBEs on the Contract. If the entity submitting a Bid or Quotation, or any of its subcontractors, suppliers or consultants, are certified MBEs or WBEs they shall be identified as an MBE or WBE within the Utilization Plan.

1. Letter(s) of Intent

Except as set forth below, a Bid or Quotation shall include with its Utilization Plan, Letter(s) of Intent executed by each MBE and WBE included in the Utilization Plan and by the entity submitting the Bid or Quotation, which sets forth that each MBE and WBE intends to perform as a subcontractor, supplier, joint venture partner and/or consultant on the contract. The Letters of Intent must accurately detail the work to be performed by the MBE or WBE firm and the agreed rates and/or prices to be paid. Failure to submit all Letter(s) of Intent as required may result in the Contract Compliance Director's determination that a Bid or Quotation is not responsive and shall be cause to reject the Bid or Quotation.

All commitments made by a Bid or Quotation in its Utilization Plan must conform to those included in the submitted Letter(s) of Intent. The Contract Compliance Administrator reserves the right to request supplemental information regarding the Letter(s) of Intent submitted with a Bid or Quotation and such information shall be furnished. (Reference Economic Disclosure Section for a format sample of a Letter of Intent)

2. Letter(s) of Certification

Only **current** Letters of Certification from one of the following entities may be accepted as certification of MBE/WBE status:

- County of Cook
- City of Chicago (NOTE: firms certified by the City of Chicago in any area other than Construction must complete and submit a Personal Net Worth/Size Standard Affidavit. This form can be downloaded online at www.cookcountyil.gov/contractcompliance)

or any other governmental body or agency approved by the Contract Compliance Director as applying certification standards substantially similar to those applied by the County of Cook may also be accepted.

The Contract Compliance Director retains the right to reject the certification of any MBE or WBE on the ground that it does not meet the County's definition of a MBE or WBE.

MINORITY AND WOMEN BUSINESS ENTERPRISES
COOK COUNTY ORDINANCE CHAPTER 34, DIVISION 8, SECTION 34-260 to SECTION 34-300

3. Joint Venture Affidavit

In the event a Bid or Quotation achieves MBE and/or WBE participation by entering into a Joint Venture, the Bid or Quotation shall include the required Joint Venture Affidavit which can be downloaded online at www.cookcountyil.gov/contractcompliance). Such Joint Venture Affidavit shall be submitted with the Bid or Quotation along with **current** Letter(s) of Certification.

B. Reduction/Waiver Petition

In the event a Bid or Quotation is unable to meet the applicable contract MBE and WBE participation goals, the Bid or Quotation must include a Petition for Reduction/Waiver and submit the Petition with its Bid or Quotation. The Petition for Reduction/Waiver shall be supported with evidence and sufficient documentation to demonstrate the Bid's or Quotation's Good Faith Efforts in attempting to achieve the applicable MBE and WBE goals. Failure to submit a Petition for Reduction of Waiver as required may result in the Contract Compliance Director's determination that a Bid or Quotation is not responsive and shall be cause to reject the Bid or Quotation.

III. REDUCTION/WAIVER OF MBE/WBE GOALS

A. Granting a Reduction/Waiver Request.

1. The determination of the adequacy of the Good Faith Efforts to utilize MBEs and WBEs in a Bid or Quotation will be evaluated on the basis of the actions in attempting to achieve MBE and WBE participation goals set forth in the Bid or Quotation. Examples of actions constituting Good Faith Efforts for a Bid or Quotation are set forth within the Ordinance and in the "Petition for Reduction/Waiver of MBE/WBE Participation Goals" contained in the Bid or Quotation Documents.

2. The Contract Compliance Director may grant the Petition for Reduction/Waiver based upon the following criteria: (a) sufficient qualified MBEs and WBEs capable of providing the goods or services required by the contract are unavailable despite the good faith efforts of the contractor; (b) the specifications and the reasonable and necessary requirements for performing the contract make it impossible or economically infeasible to divide the contract into sufficiently small tasks or quantities to enable the contractor to utilize MBEs and WBEs in accordance with the applicable goals; (c) the price(s) required by any potential MBE or WBE is more that 10% above competitive levels; and (d) any other factor determined to be relevant by the Contract Compliance Director.

B. Denying a Reduction/Waiver Request.

1. If the Contract Compliance Director determines that a Bid or Quotation has not demonstrated adequate Good Faith Efforts to meet the applicable contract MBE and WBE goals, the Contract Compliance Director may deny a Petition for Reduction/Waiver and declare the Bid or Quotation non-responsive and recommend rejection of the Bid or Quotation.

2. Failure to undertake and/or to document adequate Good Faith Efforts shall be cause to deny a Petition for Reduction/Waiver. Determination of the adequacy of a Bid's or Quotation's Good Faith Effort will be evaluated on the basis of the Bid's or Quotation's actions as of the date of the Bid or Quotation opening.

MINORITY AND WOMEN BUSINESS ENTERPRISES
COOK COUNTY ORDINANCE CHAPTER 34, DIVISION 8, SECTION 34-260 to SECTION 34-300

IV. CHANGES IN CONTRACTOR'S UTILIZATION PLAN

A. Contractor, during its performance of the Contract, may not change the MBE or WBE commitments specified in its Utilization Plan, including but not limited to, terminating a MBE or WBE contract, reducing the scope of the work to be performed by a MBE/WBE, or decreasing the price to a MBE/WBE, except as otherwise provided by the Ordinance.

B. Where an enterprise under the Contact was previously considered to be a MBE or WBE but is later found not to be, or work is found not to be creditable toward the MBE or WBE goals as stated in the Utilization Plan, the Contractor shall seek to discharge the disqualified enterprise, upon proper written notification to the Contract Compliance Administrator, and make every effort to identify and engage a qualified MBE or WBE as its replacement. Failure to obtain a MBE or WBE replacement within 30 working days of the Contract Compliance Administrator's written approval of the removal of a MBE or WBE may result in the termination of the contract or the imposition of such remedy authorized by the Ordinance, unless a written Petition for Reduction/Waiver is granted to Contractor allowing Contractor to award the work to a non-MBE or WBE.

V. NON-COMPLIANCE

If the County determines that the Contractor has failed to comply with its contractual commitments or any portion of the Ordinance or this provision, the Contract Compliance Administrator will notify the Contractor of such noncompliance and may take any and all appropriate actions as set forth within the Ordinance.

VI. REPORTING/RECORD-KEEPING REQUIREMENTS

The Contractor is required to comply with the reporting and record-keeping requirements as set forth in the Ordinance and as established by the Contract Compliance Administrator. Upon award of a Contract, Contractor is responsible for acquiring all necessary County reporting and record-keeping forms which will be made available in the Office of Contract Compliance.

VII. EQUAL EMPLOYMENT OPPORTUNITY

Compliance with MBE and WBE requirements will not diminish or supplant Equal Employment Opportunity and Civil Rights provisions as required by law as they relate to contractor and subcontractor obligations.

Any questions regarding this section should be directed to:

Office of Contract Compliance
118 North Clark Street, Room 1020
Chicago, Illinois 60602
(312) 603-5502

COOK COUNTY

DEPARTMENT OF TRANSPORTATION AND HIGHWAYS

SPECIAL PROVISION
FOR
SPECIFIC EQUAL EMPLOYMENT OPPORTUNITY RESPONSIBILITIES
NONFEDERAL-AID CONTRACTS

1) General

a) The requirements set forth herein shall constitute the specific affirmative action requirements under this contract and supplement the non-discrimination requirements contained elsewhere in this proposal.

b) The contractor will work with the Cook County Department of Transportation and Highways in carrying out Equal Employment Opportunity (EEO) obligations and in their reviews of activities under the contract.

c) The contractor, and all subcontractors holding subcontracts (not including material suppliers) of $10,000.00 or more, will comply with the following minimum specific requirement activities of equal employment opportunity the contractor will include these requirements in every subcontract of $10,000.00 or more with such modification of language as is necessary to make them binding on the subcontractor.

2) Equal Employment Opportunity Policy

The contractor will accept as operating policy the following statement which is designed to further the provision of Equal Employment Opportunity to all persons, and to promote the full realization of equal employment opportunity through a positive continuing program:

"It is the policy of this company to ensure that applicants are employed, and that employees are treated during employment without regard to their race, religion, sex, color, national origin, age or disability. Such action shall include: employment, upgrading, demotion, or transfer; recruitment or recruitment advertising; layoff or termination; rates of pay or other forms of compensation; and selection for training, including apprenticeship, preapprenticeship, and/or on-the-job training."

3) Equal Employment Opportunity Officer

The contractor will designate and make known to the Cook County Department of Transportation and Highways contracting officers an EEO officer who will have the responsibility for and must be capable of effectively administering and promoting an active contractor program of Equal Employment Opportunity and who must be assigned adequate authority and responsibility to do so.

4) Dissemination of Policy

a) All members of the contractor's staff who are authorized to hire, supervise, promote and discharge employees, or who recommend such action, or who are substantially involved in such action, will

be made fully cognizant of, and will implement, the contractor's EEO policy and contractual responsibilities to provide Equal Employment Opportunity in each grade and classification of employment, to ensure that the above agreement will be met, the following actions will be taken as a minimum:

(1) periodic meetings of supervisory and personnel office employees will be conducted before the start of work and then not less often than once every six months, at which time the contractor's EEO policy and its implementation will be reviewed and explained. The meetings will be conducted by the EEO officer.

(2) All new supervisory or personnel office employees will be given a thorough indoctrination by the EEO officer, covering all major aspects of the contractor's EEO obligations within thirty (30) days following their reporting for duty with the contractor.

(3) All personnel who are engaged in direct recruitment for the project will be instructed by the EEO officer in the contractor's procedures for locating and hiring minority and female employees.

b) In order to make the contractor's EEO policy known to all employees, prospective employees and potential sources of employees, i.e., schools, employment agencies, labor unions (where appropriate), college placement officers, etc., the contractor will take the following actions:

(1) Notices and posters setting forth the contractor's EEO policy will be placed in areas readily accessible to employees, applicants for employment and potential employees.

(2) The contractor's EEO policy and the procedures to implement such policy will be brought to the attention of employees by means of meetings, employee handbooks, or other appropriate means.

5) Recruitment

a) When advertising for employees, the contractor will include in all advertisements for employees the notation: "an Equal Opportunity Employer". All such advertisements will be published in newspapers, or other publications, having a large circulation among minority groups in the area from which the project work force would normally be derived.

b) The contractor will, unless precluded by a valid bargaining agreement, conduct systematic and direct recruitment through public and private employee referral sources likely to yield qualified minority and female applicants; including, but not limited to, state employment agencies, schools, colleges and minority and female organizations. To meet this requirement, the contractor will identify sources of potential minority and female employees, and establish with such identified sources procedures whereby minority and female applications may be referred to the contractor for employment consideration.

In the event the contractor has a valid bargaining agreement providing for exclusive hiring hall referral, he is expected to observe the provisions of that agreement to the extend that the system permits the contractor's compliance with eeo contract provisions.

c) The contractor will encourage present employees to refer minority and female applicants for employment by posting appropriate notices or bulletins in areas accessible to all such employees. In addition, information and procedures with regard to referring minority and female applicants will be discussed with employees.

6) Personnel Actions

Wages, working conditions, and employee benefits shall be established and administered, and personnel actions of every type, including hiring, upgrading, promotion, transfer, demotion, layoff, and terminations, will be taken without regard to race, color, religion, sex, national origin, age or disability. The following procedures shall be followed:

a) The contractor will conduct periodic inspections of project sites to insure that working conditions and employee facilities do not indicate discriminatory treatment of project site personnel.

b) The contractor will periodically evaluate the spread of wages paid within each classification to determine any evidence of discriminatory wage practices.

c) The contractor will periodically review selected personnel actions in depth to determine whether there is evidence of discrimination. Where evidence is found, the contractor will promptly take corrective action. If the review indicates that the discrimination may extend beyond the actions reviewed, such corrective action shall include all affected persons.

d) The contractor will promptly investigate all complaints of alleged discrimination made to the contractor in connection with the obligations under this contract, will attempt to resolve such complaints, and will take appropriate corrective action within a reasonable time. If the investigation indicates that the discrimination may affect persons other than the complainant, such corrective action shall include such other persons. Upon completion of each investigation, the contractor will inform every complainant of all of the avenues of appeal.

7) Training and Promotion

a) The contractor will assist in locating, qualifying and increasing the skills of minority and female employees and applicants for employment.

b) Consistent with the contractor's work force requirements and as permissible under federal and state regulations, the contractor shall make full use of training programs, i.e., apprenticeship, and on-the-job training programs for the geographical area of contract performance.

c) The contractor will advise employees and applicants for employment of available training programs and entrance requirements for each.

d) The contractor will periodically review the training and promotion potential of minority and female employees and will encourage eligible employees to apply for such training and promotion.

Unions

If the contractor relies in whole or in part upon unions as a source of employees, the contractor will use their best efforts to obtain the cooperation of such unions to increase opportunities form minorities and females within the unions and to effect referrals by such unions of minority and female employees. Actions by the contractor, either directly or through a contractor's association acting as agent, will include the procedures set forth below:

e) The contractor will use best efforts to develop, in cooperation with the unions. Joint training programs aimed toward qualifying more minority and female employees for membership in the unions and increasing the skills of minority and female employees so that they may qualify for higher paying employment.

f) The contractor will use best efforts to incorporate an EEO clause into each union agreement to the end that such union will be contractually bound to refer applicants without regard to their race, color, religion, sex, national origin, age or disability.

g) The contractor is to obtain information as to the referral practices and policies of the labor union except that to the extent such information is within the exclusive possession of the labor union and such labor union refuses to furnish such information to the contractor, the contractor shall so certify to the Cook County Department of Transportation and Highways and shall set forth what efforts have been made to obtain such information.

h) In the event the union is unable to provide the contractor with a reasonable flow of minority and female referrals within the time limit set forth in the collective bargaining agreement, the contractor will, through independent recruitment efforts, fill the employment vacancies without regard to race, color, religion, sex, national origin, age or disability; making full efforts to obtain qualified and/or qualifiable minorities and females. (The U.S. Department of Labor has held that it shall be no excuse that the union with which the contractor has a collective bargaining agreement providing for exclusive referral failed to refer minorities or female employees). In the event the union referral practice prevents the contractor from meeting the obligations pursuant to these special provisions, such contractor shall immediately notify the Cook County Department of Transportation and Highways.

8) Selection of subcontractors, procurement of materials and leasing of equipment

The contractor shall not discriminate on the grounds of race, color, religion, sex, national origin, age or disability in the selection and retention of subcontractors, including procurement of materials and leases of equipment.

a) The contractor shall notify all potential subcontractors and suppliers of his/her EEO obligation under this contract.

b) Minority and Women Owned Business Enterprises, shall have equal opportunity to compete for and perform subcontracts which the contractor enters into pursuant to this contract. The contractor will use best efforts to solicit bids from and to utilize M/WBE subcontractors or subcontractors with meaningful minority and female representation among their employees.

c) The contractor will use his/her best efforts to ensure subcontractor compliance with their EEO obligations.

9) Records and reports

The contractor shall keep such records as necessary to document compliance with the EEO requirements. Such records shall be retained for a period of three (3) years following completion of the contract work and shall be available at reasonable times and places for inspection by authorized representatives of the Cook County Department of Transportation and Highways.

a) The records kept by the contractor shall document the following:

(1) The number of minorities, non-minorities and females employed in each work classification on the project.

(2) The progress and efforts being made in cooperation with unions, when applicable, to increase employment opportunities for minorities and females;

(3) The progress and efforts being made in locating, hiring, training, qualifying, and upgrading minority and female employees; and,

(4) The progress and efforts being made in securing the services of DBE subcontractors or subcontractors with meaningful minority and female representation among their employees.

b) The contractor will submit to the Cook County Department of Transportation and Highways a monthly report every month for the duration of the project, indicating the number of minority, non-minority and female employees currently engaged in each work classification required by contract work and the number of hours worked. This information is to be reported on form SBE-956. If on-the-job training is being required by special provision, the contractor will be required to collect and report training data.

Notice of requirement for affirmative
Action to ensure equal employment
Opportunity (executive order 11246)

(1) The offeror's or bidder's attention is called to the "equal opportunity clause" and the "standard federal equal employment opportunity construction contract specifications" set forth herein.

(2) The goals and timetables for minority and female participation, expressed in percentage terms for the contractor's aggregate workforce in each trade on all construction work in the covered area, are as follows:

APPENDIX A

The following goal for female utilization in each construction craft and trade shall apply to all contractors holding federal and federally assisted construction contracts and subcontracts in excess of $10,000.00. The goal is applicable to the contractor's total on-site construction workforce, regardless of whether or not part of that workforce is performing work on a federal, federally assisted or nonfederally related construction contract or sub contract. Area covered (statewide) goals for women apply nationwide.

Goal	Goal (Percentage)
Female Utilization	6.9

APPENDIX B

Until further notice, the following goals for minority utilization in each construction craft and trade shall apply to all contractors holding federal or federally-assisted construction contracts and subcontracts in excess of $10,000.00 to be performed in the respective geographical areas. The goals are applicable to the contractor's total on-site construction workforce, regardless of whether or not part of that workforce is performing work on a federal, federally-assisted or nonfederally related construction contract or subcontract.

Economic area	Goal (percent)
083 Chicago, IL Smsa Counties: 1600 Chicago, IL - IL - Cook, DuPage, Kane, Lake, Mchenry, Will	19.6

These goals are applicable to all the contractor's construction work (whether or not it is federal or federally assisted) performed in the covered area. If the contractor performs construction work in a geographical area located outside of the covered area, it shall apply the goals established for such geographical area where the work is actually performed. With regard to this second area, the contractor also is subject to the goals for both its federally involved and nonfederally involved construction. The contractor's compliance with executive order and the regulations in 41 cfr part 60-4 shall be based on its implementation of the equal opportunity clause, specific affirmative action obligations required by the provisions and specifications set forth in its federally assisted contracts, and its efforts to meet the goals established for the geographical area where the contract resulting from this solicitation is to be performed. The hours of minority and female employment and training must be substantially uniform throughout the length of the contract, and in each trade, and the contractor shall make a good faith effort to employ minorities and women evenly on each of its projects. The transfer of minority of female employees or trainees from contractor to contractor or from project to project for the sole purpose of meeting the contractor's goals shall be a violation of the contract, the executive order and the regulations in 41 cfr part 60-4. Compliance with the goals will be measured against the total work hours performed.

(3) As used in this notice, and in the contract resulting from this solicitation, the "covered area" is the entire state of Illinois for the goal set forth in **Appendix A** and the county or counties in which the work is located for the goals set forth in **Appendix B**.

Standard federal equal employment
Opportunity construction contract
Specifications (executive order 11246)

1) As used in these specifications:

   a) "covered area" means the geographical area described in the solicitation from which this contract resulted;

   b) "director" means director, office of federal contract compliance programs, united states department of labor, or any person to whom the director delegates authority;

   c) "employer identification number" means the federal social security number used on the employer's quarterly federal

      Tax return, U.S. Treasury Department form 941.

   d) "minority" includes:

      i) Black (all persons having origins in any of the black African racial groups not of Hispanic origins);

      ii) Hispanic (all persons of Mexican, Puerto Rican, Cuban, central or south American or other Spanish culture or origin, regardless of race);

      iii) Asian and pacific islander (all persons having origins in any of the original peoples of the far east, southeast Asia, the Indian subcontinent, or the pacific islands); and

      iv) American Indian or Alaskan native (all persons having origins in any of the original peoples of north America and maintaining identifiable tribal affiliations through membership and participation or community identification).

2) Whenever the contractor, or any subcontractor at any tier, subcontracts a portion of the work involving any construction trade, it shall physically include in each subcontract in excess of $10,000.00 the provisions of these specifications and the notice which contains the applicable goals for minority and female participation and which is set forth in the solicitations from which this contract resulted.

3) If the contractor is participating (pursuant to 41 cfr 60-4.5) in a hometown plan approved by the U. S. Department of Labor in the covered area wither individually or through an association, its affirmative action obligations on all work in the plan area (including goals and timetables) shall be in accordance with that plan for those trades which have unions participating in the plan. Contractors must be able to demonstrate their participation in and compliance with the provisions of any such hometown plan. Each contractor or subcontractor participating in an approved plan is individually required to comply with its obligations under the EEO clause, and to make a good faith effort to achieve each goal under the plan in each trade in which it has employees. The overall good faith performance by other contractors or subcontractors toward a goal in an approved plan does not excuse any covered contractor's or subcontractor's failure to take good faith efforts to achieve the plan goals and timetables.

4) The contractor shall implement the specific affirmative action standards provided in paragraphs 7a through p of these specifications. The goals set forth in the solicitation from which this contract

resulted are expressed as percentages of the total hours of employment and training of minority and female utilization the contractor should reasonably be able to achieve in each construction trade in which it has employees in the covered area. Covered construction contractors performing construction work in geographical areas where they do not have a federal or federally assisted construction

Contract shall apply the minority and female goals established for the geographical area where the work is being performed. Goals are published periodically in the federal register in notice form, and such notices may be obtained from any office of federal contract compliance programs office or from federal procurement contracting officers. The contractor is expected to make substantially uniform progress toward its goals in each craft during the period specified.

5) Neither the provisions of any collective bargaining agreement, nor the failure by a union with whom the contractor has a collective bargaining agreement, to refer either minorities or women shall excuse the contractor's obligations under these specifications, executive order 11246, or the regulations promulgated pursuant thereto.

6) In order for the nonworking training hours of apprentices and trainees to be counted in meeting the goals, such apprentices and trainees must be employed by the contractor during the training period, and the contractor must have made a commitment to employ the apprentices and trainees at the completion of their training, subject to the availability of employment opportunities. Trainees must be trained pursuant to training programs approved by the U.S. Department of Labor.

7) The contractor shall take specific affirmative actions to ensure equal employment opportunity. The evaluation of the contractor's compliance with these specifications shall be based upon its effort to achieve maximum results from its actions. The contractor shall document these efforts fully, and shall implement affirmative action steps at least as extensive as the following:

   a) Ensure and maintain a working environment free of harassment, intimidation, and coercion at all sites, and in all facilities at which the contractor's employees are assigned to work. The contractor, where possible, will assign two or more women to each construction project. The contractor shall specifically ensure that all foremen, superintendents, and other on-site supervisory personnel are aware of and carry out the contractor's obligation to maintain such a working environment, with specific attention to minority or female individuals working at such sites or in such facilities.

   b) Establish and maintain a current list of minority and female recruitment sources, provide written notification to minority and female recruitment sources and to community organizations when the contractor or its unions have employment opportunities available, and maintain a record of the organizations' responses.

   c) Maintain a current file of the names, addresses and telephone numbers of each minority and female off-the street applicant and minority or female referral from a union, a recruitment source or community organization and of what action was taken with respect to each such individual. If such individual was sent to the union hiring hall for referral and was not referred back to the contractor by the union or, if referred, not employed by the contractor, this shall be documented in the file with the reason therefore, along with whatever additional actions the contractor may have taken.

   d) Provide immediate written notification to the director when the union or unions with which the contractor has a collective bargaining agreement has not referred to the contractor a minority

person or woman sent by the contractor, or when the contractor has other information that the union referral process has impeded the contractor's efforts to meet its obligations.

e) Develop on-the-job training opportunities and/or participate in training programs for the area which expressly include minorities and women, including upgrading programs and apprenticeship and trainee programs relevant to the contractor's employment needs, especially those programs funded or approved by the Department of Labor. The contractor shall provide notice of these programs to the sources complied under 7b above.

f) Disseminate the contractor's eeo policy by providing notice of the policy to unions and training programs and requesting their cooperation in assisting the contractor in meeting its eeo obligations; by including it in any policy manual and collective bargaining agreement; by publicizing it in the company newspaper, annual report, etc.; by specific review of the policy with all management personnel and with all minority and female employees at least once a year; and by posting the company eeo policy on bulletin boards accessible to all employees at each location where construction work is performed.

g) Review, at least annually, the company's EEO policy and affirmative action obligations under these specifications with all employees having any responsibility for hiring, assignment, layoff, termination or other employment decisions including specific review of these items with onsite supervisory personnel such as superintendents, general foremen, etc., prior to the initiation of construction work at any job site. A written record shall be made and maintained identifying the time and place of these meetings, persons attending, subject matter discussed, and disposition of the subject matter.

h) Disseminate the contractor's EEO policy externally by including it in any advertising in the news media, specifically including minority and female news media, and providing written notification to and discussing the contractor's eeo policy with other contractors and subcontractors with whom the contractor does or anticipates doing business.

i) Direct its recruitment efforts, both oral and written, to minority, female and community organizations, to schools with minority and female students and to minority and female recruitment and training organizations serving the contractor's recruitment area and employment needs. Not later than one month prior to the date for the acceptance of applications for apprenticeship of other training by any recruitment source, the contractor shall send written notifications such as the above, describing the openings, screening procedures, and test to be used in the selection process.

j) Encourage present minority and female employees to recruit other minority persons and women and, where reasonable, provide after school, summer and vacation employment to minority and female youth both on the site and in other areas of a contractor's workforce.

k) Validate all tests and other selection requirements here there is an obligation to do so under 41 cfr part 60-3.

l) Conduct, at least annually, an inventory and evaluation at least of all minority and female personnel for promotional opportunities and encourage these employees to seek or to prepare for, through appropriate training, etc., such opportunities.

m) Ensure that seniority practices, job classifications, work assignments and other personnel practices, do not have a discriminatory effect by continually monitoring all personnel and employment related activities to ensure that the EEO policy and the contractor's obligations under these specifications are being carried out.

n) Ensure that all facilities and company activities are nonsegregated except that separate or single-user toilet and necessary changing facilities shall be provided to assure privacy between the sexes.

o) Document and maintain a record of all solicitations of offers for subcontracts from minority and female construction contractors and suppliers, including circulation of solicitations to minority and female contractor associations and other business associations.

p) Conduct a review, at least annually, of all supervisors' adherence to and performance under the contractor's EEO policies and affirmative action obligations.

8) Contractors are encouraged to participate in voluntary associations which assist in fulfilling one or more of their affirmative action obligations (7a through p). The efforts of a contractor association, joint contractor-union, contractor-community , or other similar group of which the contractor is a member and participant, may be asserted as fulfilling any one or more of its obligations under 7a through p of these specifications provided that the contractor actively participates in the group, makes every effort to assure that the group has a positive impact on the employment of minorities and women in the industry, ensures that the concrete benefits of the program are reflected in the contractor's minority and female workforce participation, make a good faith effort to meet its individual goals and timetables, and can provide access to documentation which demonstrates the effectiveness of actions taken on behalf of the contractor. The obligation to comply however is the contractor's and failure of such a group to fulfill and obligation shall not be a defense for the contractor's noncompliance.

9) A single goal for minorities and a separate single goal for women have been established. The contractor, however, is required to provide equal employment opportunity and to take affirmative action for all minority groups, both male and female, and all women, both minority and non-minority. Consequently, the contract may be in violation of the executive order if a particular group is employed in a substantially disparate manner, (for example, even though the contractor has achieved its goal for women generally, the contractor may be in violation of the executive order if a specified minority group of women is underutilized).

10) The contractor shall not use the goals and timetables of affirmative action standards to discriminate against any person because of race, color, religion, sex, or national origin.

11) The contractor shall not enter into any subcontract with any person or firm debarred from government contracts pursuant to executive order 11246.

12) The contractor shall carry out such sanctions and penalties for violation of the specifications and of the equal opportunity clause, including suspension, termination and cancellation of existing subcontracts, as may be imposed or ordered pursuant to executive order 11246, as amended and its implementing regulations, by the office of federal contract compliance programs. Any contractor who fails to carry out sanctions and penalties shall be in violation of these specifications and executive order 11246, as amended.

13) The contractor, in fulfilling its obligations under these specifications, shall implement specific affirmative action steps, at least as extensive as those standards prescribed in paragraph 7 of these specifications, so as to achieve maximum results from its efforts to ensure equal employment opportunity. If the contractor fails to comply with the requirements of the executive order, the implementing regulations, or these specifications, the director shall proceed in accordance with 41 cfr 60-4.8.

14) The contractor shall designate a responsible official to monitor all employment related activity to ensure that the company EEO policy is being out, to submit reports relating to provisions hereof as may be required by the government and to keep records. Records shall at least include for each employee the name, address, telephone numbers, construction assigned, social security number, race, sex, status (e.g., mechanic, apprentice, trainee, helper, or laborer), dates of changes of status, hours worked per week in the indicated trade, rate of pay, and locations at which the work was performed. Records shall be maintained in an easily understandable and retrievable form; however, to the degree that existing records satisfy this requirement, contractors shall not be required to maintain separate records.

15) Nothing herein provided shall be construed as a limitation upon the application of other laws which establish standards of compliance or upon the application requirements for the hiring of local or other area residents (e.g., those under the Public Works Employment Act of 1977 and the Community Development Block Grant Program).

SPECIAL PROVISION
FOR
INSURANCE REQUIREMENTS

Within fourteen (14) days of notification of award, the bidder shall, at its cost, procure and maintain insurance with coverage in amounts not less than (i) governing law, (ii) as specified herein, or (iii) as actually maintained by Contractor. The cost to the Contractor for providing this insurance coverage shall be considered as included in the cost of the contract.

Nothing contained in these insurance requirements is to be construed as limiting the extent of the Contractor's responsibility for payment of damages resulting from its operations under this Contract.

Contractor shall require all subcontractors to provide the insurance required in this Agreement, or Contractor may provide said coverage for subcontractors. All subcontractors are subject to the same insurance requirements as Contractor unless specified otherwise.

The Cook County Department of Risk Management maintains the right to modify, delete, alter or change these requirements.

The Contractor shall maintain insurance as set forth below.

A. Workers Compensation Insurance

In accordance with the Laws of the State of Illinois and including Employer's Liability Insurance with limits not less than the following:

The Workers Compensation policy shall also include the following provisions:

Bodily Injury by accident	$1,000,000 each accident
Bodily Injury by Disease	$1,000,000 policy limit
Bodily Injury by Disease	$1,000,000 each employee

B. Commercial General Liability Insurance

For bodily injury, personal injury and property damage on an occurrence form (ISO Form CG 0001 or equivalent) with limits not less than the following:

Each Occurrence	$1,000,000
General Aggregate per Project	$2,000,000
Products – Completed Operations Aggregate	$2,000,000

i) All Premises and Operations.

ii) Explosion, collapse and underground damage.

iii) Contractual liability for the obligations assumed in the Indemnification and Hold Harmless agreement.

iv) Contractor's Protective coverage for independent contractors or subcontractors employed by Contractor. Elaine, we should keep this in. It was in the earlier version.

Such policy must contain (i) ISO Additional Insured Endorsements CG 2010 **and** CG 2037 or equivalent, and (ii) severability of interest/separation of insured clause. The products and completed operations coverage (including ISO Endorsement CG 2037 or equivalent) must be maintained for a period of two years after final acceptance of the Project.

C. Commercial Automobile Liability Insurance

For bodily injury and property damage arising from the ownership, maintenance or use of owned, hired and non-owned vehicles (ISO Form CA 00 01 or equivalent) with a limit no less than $1,000,000 per accident.

Cook County, its officials and employees shall be listed as additional insured with respect to operations performed.

D. Excess Liability

Such policy shall be excess over Commercial General Liability, Automobile Liability, and Employer's Liability with limits not less than the following amounts:

Each Occurrence:	$5,000,000
General Aggregate per Project:	$5,000,000

Cook County, its officials and employees shall be listed as additional insured with respect to operations performed.

If the policy is a 'claims made' form or if any coverage under this policy is written as 'claims made', coverage will be maintained for two (2) years after project completion.

Additional Insured

The required insurance policies, with the exception of the Workers Compensation, must name **Cook County, its officials and employees as additional insured,** with respect to operations performed. The Commercial General Liability policy shall specifically include **ISO Additional Insured Endorsements CG 2010 and CG 2037 or**

equivalent. Contractor's insurance shall be primary and non-contributory with any insurance maintained by such additional insured.

No other form will be accepted without prior approval of the Cook County Department of Transportation and Highways. All liability policies shall entirely delete ISO endorsements CG21 39 10 93 or similar endorsement or policy provision which limit contractual liability.

As part of the provisions and requirement for this project, other entities may be required to be added as an "additional insured" on the liability insurance of the Contractor. The Contractor shall assure these entities are included as additional insured.

Qualification of Insurers

All insurers must possess an A.M. Best rating of A- VII or better and be authorized to do business in Illinois. The insurance limits required herein may be satisfied by a combination of primary, umbrella and/or excess liability insurance policies. Companies with ratings lower than (A-) or VII will be acceptable only upon written consent of Superintendent of Transportation and Highways. Upon written request from the Superintendent of Transportation and Highways, Contractor must supply certified copies of the required insurance policies within ten (10) days.

Certificates of Insurance

Within fourteen (14) days of notification of award, the Contractor must provide properly completed certificates of insurance on Acord forms which evidence the required insurance. The certificates must specifically list each of the required additional insured and specify that Waiver of Subrogation Endorsements apply. The certificates must be accompanied by the required Commercial General Liability ISO Additional Insured Endorsements CG 2010 **and** CG 2037 (or equivalent).

The receipt of any certificate of insurance does not constitute agreement by the County that the insurance requirements have been fully met or that the insurance policies indicated on the certificate of insurance are in compliance with the insurance required above. Coverage shall be in companies subject to approval of the County.

In no event shall any failure of the County to receive certificates of insurance required hereof or to demand receipt of such Certificates of Insurance be construed as a waiver of Contractor's obligations to obtain insurance pursuant to these insurance requirements. The certificates shall also include the following: **The coverage and limits conform to the minimum required by Article 107.27 of**

the Illinois Department of Transportation Standard Specifications for Road and Bridge Construction.

Notice of Cancellation or Non-Renewal

Contractor shall provide the Superintendent of Highways and Transportation with thirty (30) days advance written notice in the event any required insurance will be cancelled, materially reduced or non-renewed. Contractor shall secure replacement coverage to comply with the stated insurance requirements and provide new certificates of insurance to the Superintendent of Transportation and Highways. .

In the event the insurance is cancelled before the completion of the project, the County shall reserve its rights under the contract, including but not limited to its rights under Article 108.07 of the Standard Specifications For Road and Bridge Construction, to order the job shut down until the Contractor obtains the required insurance in the amounts stated herein or, the County may obtain the coverage required and then shall deduct the appropriate premium cost from the monies due the Contractor.

Property Insurance

Contractor is responsible for all loss or damage to personal property (including materials, equipment, tools and supplies) owned, rented or used by Contractor.

SPECIAL PROVISION
FOR
RAILROAD PROTECTIVE LIABILITY INSURANCE

The contractor will be required to carry Railroad Protective Liability and Property Damage Liability Insurance in accordance with Article 107.11 of the Standard Specifications. The limits under this Special Provision are to be not less than $5,000,000.00 combined single limit per occurrence for bodily injury liability and property damage liability with an aggregate limit of $10,000,000.00 over the life of the policy.

NAMED INSURED

Northeast Illinois Regional Commuter
Corporation Railroad
d/b/a/ Metra
Marilyn Schlismann
Insurance Specialist II
Metra Risk Management
547 West Jackson Boulevard
Chicago, IL 60661-0571
Phone: 312-322-7093
Fax: 312-322-6975
MSchlismann@METRARR.COM

NUMBER AND SPEED
OF FREIGHT AND/OR PASSENGER TRAINS

Speed:
Passenger – 79 mph
Freight – 30 mph
No. of Trains:
Weekday – 48 passenger, 4 freight
Saturday – 20 passenger, 4 freight
Sunday – 16 passenger, 4 freight

Basis of Payment - The costs for providing insurance, as noted above, will be paid for as the contract unit price per lump sum for RAILROAD PROTECTIVE LIABILITY INSURANCE.

Approval of Insurance – Within fourteen (14) calendar days of notice of award, The **ORIGINAL AND ONE CERTIFIED** copy of each required policy shall be submitted for approval, when applicable.

The Contractor will be advised when the Department has received approval of the insurance from the railroad(s). Before any work begins on railroad right-of-way, the Contractor shall submit to the Resident Engineer evidence that the required Railroad Protective Liability Insurance has been approved by the railroads. The Contractor shall also provide the Resident Engineer with the expiration date of each required policy.

SPECIAL PROVISION
FOR
INDEMNIFICATION FOR COOK COUNTY

The Contractor shall indemnify the County of Cook and its commissioners, officials, employees, agents and representatives, and their respective heirs, successors and assigns (the "County") pursuant to the language provided under Section 107.26 of the Standard Specifications for Road and Bridge Construction.

107.26 Indemnification. To the fullest extent permitted by law, the Contractor shall be responsible for any and all injuries to persons or damages to property due to the activities of the Contractor, subcontractors, licensees, invitees, suppliers, agents, or employees arising out of, incident to, or resulting from performance of the contract, or any activity in connection therewith. The Contractor shall indemnify and hold harmless the County of Cook and its commissioners, officials, employees, agents and representatives, and their respective heirs, successors and assigns, from any and all claims, lawsuits, actions, costs, and fees (including reasonable attorney fees and expenses) of every nature or description, arising from, growing out of, or connected with the work, or on account of or in consequence of any neglect in safeguarding the work or on account of or in consequence of using unacceptable materials in constructing the work or because of any act or omission, neglect, or misconduct of the Contractor, its officers, employees, agents, its subcontractor, or subcontractors licensees, invitees, or anyone directly or indirectly employed by them, and/or anyone for whose acts they may be liable or because of any claims or amount recovered by reason of any infringement of any patent, trademark, or copyright or by reason of the violation of any law, ordinance, order or decree. This obligation is binding on the Contractor without regard to whether or not such claim, damage, loss, or expense is caused in part by the act, omission, or negligence of the County and its commissioners, officials, employees, agents and representatives, and their respective heirs, successors and assigns.

In claims against the County by an employee of the Contractor, its officers, employees, agents, its subcontractor, or subcontractors licensees, invitees, or anyone directly or indirectly employed by them, or anyone for whose acts they may be liable, the indemnification herein shall not be limited by a limitation on amount or type of damages payable by or for the Contractor or subcontractor under any employee benefits act including but not limited to the Worker's Compensation Act.

In the event any such claim, lawsuit, or action is asserted, any such money due the Contractor under and by virtue of the contract as shall be deemed necessary by the County for the payment thereof, may be retained by the County for said purpose, or in case no money or insufficient money is due to satisfy such claim, lawsuit, or action, the Contractor's Surety shall remain liable for any payment therefore until any such lawsuit, action, or claim has been settled or has been fully judicially determined and satisfied.

No inspection by the County, its employees or agents shall be deemed a waiver by the County of full compliance with the requirements of the contract. This indemnification shall not be limited by any Performance Bond or insurance protection required of the Contractor in the contract.

SPECIAL PROVISION
FOR
JOINT VENTURES

Contractors submitting a bid as a joint venture shall comply with the following procedures:

1) Contractors may combine their available bidding capacity for a single contract to bid as a joint venture.

2) The joint venture shall be indicated by the filing of a ***Joint Venture Minimum Declaration of Work*** for each of the contracts for which joint venture approval is sought. It identifies the managing partner and indicated the kind and the percentage of work to be performed by each joint venture partner with its own workforce and resources other than work reserved to meet any disadvantage business goal advertised in the contract. The form indicated the joint venture agreement shall be included in the bid. In addition, each joint venture partner firm shall submit an ***Affidavit of Availability***. The ***Joint Venture Minimum Declaration of Work*** and all ***Affidavits of Availability*** **must be included in the bid.** The proposed joint venture shall not be approved if the establishment of a joint venture would unduly restrict competition. A determination that a proposed venture would unduly restrict competition is limited to any of the following reasons:

   a) That the proposed joint venture would consist of more than three (3) qualified contractors.

   b) That the ***Joint Venture Minimum Declaration of Work*** indicated that any one of the proposed joint ventures partners will perform less than ten percent of the non-disadvantage business work with its own workforce and resources.

   c) That for letting items estimates by the Department to be bid at less than $1,000,000.00 more than one of the proposed joint venture partners has the individual qualification ratings and bid the item without the approval of the venture. This determination shall not apply to joint ventures between firms having fifty-one percent or more common controlling ownership or on items where the estimated quantity of asphalt exceeds 10,000 tons or concrete exceeds 5,000 cubic yards. Each proposed joint venture shall submit, with the bid, a ***Joint Venture Certificate of Explanation and Justification*** for each of the contracts estimated at less than $1,000,000.00 for which joint venture approval is sought. The form indicated the circumstances which apply to the joint venture. That is there fifty-one percent (51%) or more common controlling ownership, or does one or more parties to the joint venture not have the financial capacity, work capacity or work categories to complete the project. The ***Joint Venture Certificate of Explanation*** **must be included in the bid.**

3) Contractors whose financial ratings are based upon unaudited financial statements will not be permitted to joint venture with each other to bid contracts which are estimated to exceed $350,000.00. However, such contractors may be permitted to joint venture with contractors who have a financial rating based upon an audited statement to bid contracts estimated to exceed $350,000.00.

4) If a joint venture work rating is limited by its maximum financial rating, the full value of the computed work rating will be used in analyzing the joint venture approval request. However, the combined maximum work rating in any category shall not exceed the combined maximum financial rating of the joint venture.

5) If an approved joint venture is awarded a contract, the kind and percentage of work indicated on the ***Joint Venture Minimum Declaration of Work*** may be amended as many times as necessary by the contractor provided that each partner of the approved joint venture performs at least ten percent of the nondisadvantaged work with its own workforce and resources.

Copies of all required Joint Venture Forms are attached.

Please note that signed and notarized originals of all required Joint Venture Forms mentioned above **must be included in the bid.** This includes ***Affidavits of Availability*** for all parties to the joint venture.

JOINT VENTURE FORMS

Qualified contractors wishing to combine bidding capacity and bid items as joint ventures must submit the appropriate properly completed forms and include them in their bid. The required joint venture forms include: (1) the ORIGINAL *Affidavit of Availability* (BC 57); (2) the ORIGINAL *Joint Venture Minimum Declaration of Work*; and (3) the ORIGINAL *Joint Venture Certificate of Explanation and Justification.*

COOK COUNTY DEPARTMENT OF TRANSPORTATION AND HIGHWAYS
Joint Venture Certificate of Explanation & Justification

Bid Proposal Submission Date: _____
Item No.: _____
Joint Venture Name: _____
Managing Party: _____

Firm #1

Name: _____

Address: _____

Firm #2

Name: _____

Address:-_____

Firm #3

Name: _____

Address: _____

Instructions:

Indicate the circumstances which apply to the Joint Venture.

1) One or more firms do not have the required financial capacity.

Firm #1 Firm #2 Firm #3

Does not have sufficient available prequalification financial rating to perform the work.

2) One or more firms do not have the required work capacity.

Firm #1 Firm #2 Firm #3

Does not have sufficient available prequalification work ratings to perform fifty percent of the work.

3) One or more firms do not perform work in a majority of work categories required to complete the project.

Work categories not performed by the firm:

Firm #1 _____

Firm #2 _____

Firm #3 _____

4) Fifty-one percent (51%) common controlling ownership between firms.

Firm #1 Firm #2 Firm #3

has attached statement indicating the relationship of the firms.

5) Estimated quantity of asphalt for this item exceeds 10,000 tons.

6) Estimated quantity of concrete exceeds 5,000 cubic yards.

7) Estimated costs of project are less than $1,000,000.

I/WE being duly sworn do hereby declare the explanation and justification to be a true and correct statement.

I, WE being duly sworn, do hereby declare the explanation and justification to be a true and correct statement.

Firm #1
Name _____ Title _____
(Print)

_____
Signature (Proprietor, Partner, Officer or Director)

Subscribed and sworn to before me this _____ day of _____, 20 ___. (Notary Seal)

_____ My commission expires on _____
Notary Public

Firm #2
Name _____ Title _____
(Print)

_____
Signature (Proprietor, Partner, Officer or Director)

Subscribed and sworn to before me this _____ day of _____, 20 ___. (Notary Seal)

_____ My commission expires on _____
Notary Public

Firm #3
Name _____ Title _____
(Print)

_____
Signature (Proprietor, Partner, Officer or Director

Subscribed and sworn to before me this _____ day of _____, 20 ___. (Notary Seal)

_____ My commission expires on _____
Notary Public

This form must be submitted with the bid.

COOK COUNTY DEPARTMENT OF TRANSPORTATION AND HIGHWAYS
Joint Venture Minimum Declaration of Work

Bid Proposal Submission Date: _____
Item No.: _____
Joint Venture Name: _____
Managing Party: _____

Firm #1

Name: _____

Address: _____

Firm #2

Name: _____

Address: _____

Firm #3

Name: _____

Address: _____

Instructions:

Indicate the percentage of work to be performed by each firm with their own forces.

	Firm #1	Firm #2	Firm #3
Earthwork	_____	_____	_____
Portland Cement Concrete Paving	_____	_____	_____
Bituminous Plant Mix	_____	_____	_____
Bituminous Aggregate Mixtures	_____	_____	_____
Miscellaneous Bituminous Paving	_____	_____	_____
Cleaning and Sealing Cracks & Joints	_____	_____	_____
Soil Stabilization and Modification	_____	_____	_____
Aggregate Bases and Surfaces	_____	_____	_____
Highway, Railroad & Waterway Structures	_____	_____	_____
Drainage	_____	_____	_____
Electrical	_____	_____	_____
Cover & Seal Coats	_____	_____	_____
Slurry Applications	_____	_____	_____
Miscellaneous Concrete Construction	_____	_____	_____
Landscaping	_____	_____	_____
Seeding & Sodding	_____	_____	_____
Vegetation Spraying	_____	_____	_____
Tree Trimming & Selective Tree Removal	_____	_____	_____

Fencing	_____	_____	_____
Guardrail	_____	_____	_____
Grouting	_____	_____	_____
Painting	_____	_____	_____
Signing	_____	_____	_____
Paint Pavement Marking	_____	_____	_____
Thermoplastic Pavement Marking	_____	_____	_____
Epoxy Pavement Marking	_____	_____	_____
Installation of Raised Pavement Markers	_____	_____	_____
Pavement Texturing & Surface Removal	_____	_____	_____
Cold Milling, Planning & Rototilling	_____	_____	_____
Erection	_____	_____	_____
Demolition	_____	_____	_____
Other	_____	_____	_____

I, WE being duly sworn, do hereby declare the explanation and justification to be a true and correct statement.

Firm #1

Name _____ Title _____
(Print)

_____
Signature (Proprietor, Partner, Officer or Director)

Subscribed and sworn to before me this _____ day of _____, 20 ___. (Notary Seal)

_____ My commission expires on _____
Notary Public

Firm #2

Name _____ Title _____
(Print)

_____
Signature (Proprietor, Partner, Officer or Director)

Subscribed and sworn to before me this _____ day of _____, 20 ___. (Notary Seal)

_____ My commission expires on _____
Notary Public

Firm #3

Name _____ Title _____
(Print)

_____
Signature (Proprietor, Partner, Officer or Director

Subscribed and sworn to before me this _____ day of _____, 20 ___. (Notary Seal)

_____ My commission expires on _____
Notary Public

This form must be submitted with the bid.

SPECIAL PROVISION
FOR
PROPOSAL AGREEMENTS
ADDENDUM RECEIPT

The receipt of the following addenda to the drawings and/or specification is acknowledged:

Addendum No. 1
Dated 4/17/2014

Addendum No. _____
Dated _____

Addendum No. _____
Dated _____

Addendum No. _____
Dated _____

Addendum No. _____
Dated _____

NOTE: These Addenda form a part of the Bidding and Contract Documents and modify the Original Documents for this Contract. Receipt of these Addenda shall be acknowledged above. Failure to do so may subject the Bidder to disqualification.

SPECIAL PROVISION
FOR
COMBINATION BIDDING PROCESS

All references to Sections or Articles in this specification shall be construed to mean a specific Section or Article of the Standard Specifications for Road and Bridge Construction, adopted by the Cook County Department of Transportation and Highways.

Combination Bids. The projects listed below with their individual WORKING DAYS and CALENDAR DAYS shall be let in combination:

PROJECT	SECTION	WORKING DAYS	CALENDAR DAYS
None			

A Combination Bid is a total bid received on 2 or more proposals. No Combination Bids other than those specifically set up by the Department will be considered. Separate proposal forms will be issued for each project in the combination so bids may be submitted on the combination as well as on separate units of the combination. The department reserves the right to make the awards on combination bids or separate bids to the best advantage of the Department.

If a Combination Bid is submitted on 2 or more proposals, separate proposals on each individual contract shall also be submitted, and unless separate proposals are submitted, the Combination Bid will not be considered. If the bidder desires to submit a Combination bid, the bidder shall state, in the place provided in the proposal form, the amount of the Combination Bid for the entire combination.

If a Combination Bid is submitted on any stipulated combination, and errors are found to exist in computing the gross sum bid on any one or more of the individual proposals, corrections shall be made, by the Department and the amount of the Combination Bid shall be corrected so that it will be in the same proportion to the sum of the corrected gross sum bid as the Combination Bid submitted was to the sum of the gross bid submitted.

The following provisions shall govern combination bidding:

1) A Combination Bid which is submitted for 2 or more proposals and awarded on that basis shall have the bid prorated against each proposal in proportion to the bid submitted for each proposal.

2) Separate contracts shall be executed for each proposal included in the combination.

3) The proposal guaranties which accompany the individual proposals making up the combination will be considered as also covering the Combination Bid.

4) The completion date for all contracts awarded on a Combination Bid shall be the latest completion date designated for any one or more of the contracts included in the combination, unless otherwise provided in the contract.

SPECIAL PROVISION
FOR
PROMPT PAY MECHANISMS (NON FEDERAL AID)

This contract is subject to the following payment obligations:

"As partial payments are made to the contractor in accordance with Article 109.07 of the Standard Specifications for Road and Bridge Construction, the contractor shall make corresponding partial payment within fifteen (15) calendar days to each subcontractor in proportion to the work satisfactorily completed by each subcontractor. The proportionate amount of partial payment due to each subcontractor shall be determined by the quantities measured or otherwise determined as eligible for payment by the Cook County Department of Transportation and Highways included in the partial payment to the contractor. Subcontractors shall be paid in full, including the return of any retainage previously withheld, within fifteen (15) calendar days after the subcontractor's work has been satisfactorily completed."

This Special Provision does not create any rights in favor of any subcontractor against the County of Cook or authorize any cause of action against the County of Cook on account of any payment, nonpayment, delayed payment or interest claimed by application of this Prompt Payment Special Provision. The Cook County Department of Transportation and Highways will neither determine the reasonableness of any cause for delay of payment nor enforce any claim to payment, including interest. Moreover, the Cook County Department of Transportation and Highways will not approve any delay or postponement of the fifteen (15) day requirement. State law creates remedies available to any subcontractor or material supplier, regardless of tier, who has not been paid for work properly, performed or material furnished. These remedies are lien against public funds set forth in Section 23© of the Mechanics Lien Act, 770 ILCS 60/23©, and a recovery on the contractors payment bond in accordance with the Public Construction Bond Act, 30 ILCS 550.

GENERAL PROJECT INFORMATION

Description of Work

The intent of this contract is to perform pavement maintenance on various bituminous and composite roadways within the boundaries of Cook County south of the Eisenhower Expressway (Interstate-290) on a work order basis.

The work consists of furnishing all labor, materials and equipment required for PAVEMENT RESURFACING ENHANCEMENT PROGRAM – SOUTH 2014 on a work order basis. This includes but is not limited to bituminous surface removal, hot-mix asphalt resurfacing, frame and lid adjustments, ADA compliant sidewalk ramp installation, traffic control and protection and pavement marking as described in the detail specifications, including all appurtenant work and accessories, to the complete satisfaction of, approval and acceptance by the County.

This description of work is intended to be general in nature and is neither a complete description nor a limitation on the work to be performed. Contractor shall perform all work as described in the Contract Documents or reasonable inferable as necessary to produce the results specified therein except to the extent specifically indicated in the Contract Documents to be the responsibility of others.

Traffic Signals and Loops

Traffic Signal work, including loops, is not included on this contract. The Contractor will be required to coordinate all work involving signalized intersection/loops with the Department's Electrical Division in advance as detailed in the Special Provision for Coordination of Electrical Work.

Work Orders

The Cook County Department of Transportation and Highways will prepare a detailed Work Order for each location prior to the commencement of any work. The specific work order will include the exact location of work to be performed, proposed work, summary of proposed quantities, applicable special provisions and standards and proposed completion date. Further information can be found in the Special Provision for Work Order Completion.

Locations

The limits of this contract are within the boundaries of Cook County, south of the Eisenhower Expressway (Interstate-290). Proposed locations are identified on the Proposed Location sheet in this contract.

Payments

Payments will be based on actual quantities of work performed in accordance with the contract bid item.

SPECIAL PROVISION FOR WORK ORDER COMPLETION

It is understood and agreed that time is of the essence for any work order assigned under this contract, and the Contractor agrees to begin actual work covered by this Contract after notification by the County to commence work and to prosecute the same with all due diligence so as to complete the entire work under the Contract as assigned by the Work Order in accordance with the following duration:

SEGMENT LENGTH (MILES)	CALENDAR DAYS ALLOWED
LESS THAN 0.5 MILES	65
0.5 MILES TO ONE MILE	85
MORE THAN ONE (1) MILE TO FIVE (5) MILES	110

The Contractor may prosecute the work through two shifts each day if he deems such action necessary in order to complete the work within the specified time period. However, no work will be permitted between the hours of 8:00 p.m. and 7:00 a.m. Any variation from these restricted working hours to include extended shift hours and daytime work, if any, can only be permitted with the written approval of the Engineer.

In the event that progress falls behind the approved schedule, work shall proceed on a twenty-four (24) hour per day basis without additional compensation, if so ordered by the Engineer, to comply with the requirements of this Section.

LIQUIDATED DAMAGES

Liquidated damages shall be assessed per Work Order in accordance with Art. 108.09 of the Standard Specification with the Original Contract Amount defined as the Estimated Work Order Amount. The Contractor may request and/or the Engineer may provide a punch list prior to the Work Order completion date. The liquidated damage amount specified will accrue and be assessed until final completion of the total physical work of the contract even though the work may be substantially complete.

The County shall recover said liquidated damages by deducting the amount thereof out of any moneys due or that may become due, and if said moneys are insufficient to cover said damages, then the Contractor or the Surety shall pay the amount due.

Nothing herein contained shall be construed as limiting the right of the County to recover from the Contractor any and all amounts due or to become due, and any and all costs and expenses sustained by the County for improper performance hereunder, repudiation of the Contract by the Contractor, failure to perform or breach or breaches in any other respect, including but not limited to defective workmanship or materials.

The date for commencement of work will not be counted as a calendar day but each subsequent day thereafter from midnight to midnight will be counted as one calendar day and the last day counted will be the day on which the Contractor shall have completed and the Engineer shall have accepted the entire work under this Contract.

COOK COUNTY
DEPARTMENT OF TRANSPORTATION AND HIGHWAYS

PAVEMENT RESURFACING ENHANCEMENT PROGRAM - SOUTH 2014
13-PREPS-01-RS

WORK ORDER NUMBER: SAMPLE
ROADWAY:
LIMITS:

DATE OF ISSUANCE:
ESTIMATED WORK ORDER VALUE:
WORK ORDER COMPLETION DATE:
DAILY CHARGES FOR LIQUIDATED DAMAGES:

DESCRIPTION OF WORK

ATTACHMENTS

1. Estimated Summary of Quantities
2. Plan sheets

NOTES

SPECIAL PROVISION FOR COORDINATION OF ELECTRICAL WORK

Any necessary electrical work shall be done by others under a separate contract and will not be included in this contract. The Contractor must coordinate construction activities with all parties involved in completing any electrical work.

The Contractor shall notify the Cook County Department of Transportation and Highways, Bureau of Design, Electrical Division at (312) 603-1730 at least 14 days prior to commencement of any work in the vicinity of a signalized intersection. The Electrical Division must be notified regardless of whether or not the Contractor anticipates any conflict or disturbance with electrical facilities.

Additionally, the Contractor may be required to adjust construction operations, in order to accommodate any necessary electrical work to be scheduled by the Electrical Division such as cutting of loops into the binder course.

SPECIAL PROVISION FOR TEMPORARY RAMPS

A temporary ramp of bituminous grindings derived from the HMA surface removal shall be provided at all driveways during construction operations. The minimum width of such ramp shall be 10 feet or as directed by the Engineer, compacted to the satisfaction of the Engineer.

Furnishing, maintaining, removal and disposal the temporary ramp shall not be measured or paid for separately. The cost of all necessary work shall be included in the contract unit price for HOT-MIX ASPHALT SURFACE REMOVAL of the depth specified in the plans.

SPECIAL PROVISION
FOR
CONTRACT CLAIMS

All References to Sections or Articles in this specification shall be construed to mean specific Section or Article of the Standard Specifications for Road and Bridge Construction, adopted by the Cook County Department of Transportation and Highways.

109.09 Contract Claims. Revise the second sentence of subparagraph (a) of Article 109.09 to read:

"All claims shall be submitted to the Engineer."

Revise subparagraph (e) of this Article to read:

"Procedure. The department provides three administrative levels for claims review:

Level I	Resident Engineer
Level II	Bureau Chief, Construction Bureau
Level III	Superintendent of Transportation and Highways

All Claims shall first be submitted at Level I. This Engineer shall consider all information submitted with the claim within 90 days after receipt. Claims not conforming to this Article will be returned without consideration. The Resident Engineer may schedule a claim presentation meeting if in the Resident Engineer's judgment such a meeting would aid in resolution of the claim, otherwise a decision will be based on the claim documentation submitted. If a decision is not rendered within 90 days, or if the Contractor disputes the decision, an appeal to Level II shall be made by the Contractor. An appeal to Level II shall be made by the Contractor in writing to the Resident Engineer within 45 days after the date of the Level I decision, and shall include two (2) additional copies of the claim and supporting documentation. Review of the claim at Level II shall be conducted as a full evaluation of the claim. A claim presentation meeting may be schedule if the Bureau Chief, Construction Bureau determines that such a meeting would aid in the resolution of the claim, otherwise a decision will be made on the claim documentation submitted. If a Level II decision is not rendered within 90 days after receipt of the written appeal, or if the Contractor disputes the decision, an appeal at Level III shall be made in writing to the Bureau Chief, Construction Bureau, within 45 days of the date of the Level II decision. Review of the claim at Level III shall be conducted as a full evaluation of the claim. A claim presentation meeting may be scheduled if the Superintendent of Transportation and Highways determines that such a meeting would aid in resolution of the claim, other a decision will be based on the claim documentation submitted. A Level III final decision will be rendered within 90 days of receipt for appeal.

SPECIAL PROVISION

FOR

PRE-CONSTRUCTION CONFERENCE

After the award of the contract and before construction is started, a conference shall be held at a time and place to be designated by the County.

The purpose of the conference shall be to co-ordinate the work to be performed and adopt a schedule of operations.

The conference will be attended by representatives of the participating agencies together with the public and private agencies whose facilities are involved in the construction of the project.

SPECIAL PROVISION
FOR
MOBILIZATION

This Special Provision amends the provisions of Article 671 of the Standard Specifications for Road and Bridge Construction and shall be construed to be a part thereof, superseding any conflicting provisions thereof applicable to the work under the contract.

671 Mobilization. Revise the Article to read:

671.01 Description. This work shall consist of preparatory work and operations necessary for the movement of personnel, equipment, supplies, and incidentals to the project site; for the establishment of offices, buildings, and other facilities necessary for work on the project; and for all other work or operations which must be performed or costs incurred when beginning work on the project.

671.02 Basis of Payment. Upon execution of the contract and a written letter from the Contractor requesting mobilization, three percent of the total contract bid will be paid as the original mobilization payment. The three percent will be recovered according to the following schedule.

1) When 10 percent or more of the original contract amount is earned, 1/5 of the original mobilization payment will be deducted from the current pay voucher.

2) When 20 percent or more of the original contract amount is earned, a cumulative 2/5 of the original mobilization payment will be deducted from the current pay voucher.

3) When 30 percent or more of the original contract amount is earned, a cumulative 3/5 of the original mobilization payment will be deducted from the current pay voucher.

4) When 40 percent or more of the original contract amount is earned, a cumulative 4/5 of the original mobilization payment will be deducted from the current pay voucher.

5) When 50 percent or more of the original contract amount is earned, the remaining balance of the original mobilization payment will be deducted from the current pay voucher.

SPECIAL PROVISION
FOR
CONTRACT EXTRA WORK

Description: Due to the nature of the project, the County may require extra work consisting of various items to be completed by the Contractor where the exact scope of work could not be determined at time of submittal of the bid. In order to avoid project delays or issues related to payment for such extra work, the schedule of quantities includes a Contract Extra Work item.

All work to be performed under this item shall be as directed by the Engineer and approved by the Superintendent and the Cook County Chief Procurement Officer or her designee.

Measurement: Each one dollar of extra work value will be measured as one unit.

Basis of Payment: Payment for this work will be made as specified in Article 109.04 of the Standard Specifications for Road and Bridge Construction and paid as Contract Extra Work in accordance with the requirements set forth in the Special Provision for Processing of Extra Work Payment Requests.

SPECIAL PROVISION
FOR
CONSTRUCTION AIR QUALITY
DIESEL VEHICLE EMISSIONS CONTROL
(GREEN CONSTRUCTION ORDINANCE)

Description. Diesel Vehicle Emissions Control. The reduction of construction air emissions shall be accomplished by using cleaner burning diesel fuel. All equipment on the jobsite as defined by section 30-952 (a) of the Cook County Green Construction Ordinance (ORDINANCE) shall be required to use Ultra Low Sulfur Diesel fuel (ULSD) exclusively (15 ppm sulfur content or less). Equipment shall include any "rental" equipment. In addition, the Contractor is required to comply with section 30-954 -3(c) related to engine idling.

Diesel powered equipment in non-compliance will not be allowed to be used on the project site, and is also subject to adjudication in accordance with the attached Ordinance. Liquidated damages as per section 30-955 (c) of the ORDINANCE will not apply until such time as the level 2 or 3 controls are phased in.

The Contractor is required to submit a list of equipment to be used on the project to the Cook County Department of Environmental Control (DEPARTMENT), as stated in section 30-954(a) and (b) of the ORDINANCE, and shall copy the Cook County Department of Transportation and Highways - Construction Bureau on that submittal. The 30 day submittal stipulation cited in section 30-954(a) of the ORDINANCE will be enforced. The Contractor may not begin work on the project unless acknowledgement by the DEPARTMENT of their receipt of the list is provided to the Construction Bureau of the Cook County Department of Transportation and Highways. At this time, the list will be used for statistical data only. The Contractor is not required to meet portions of the ordinance related to level 2 or 3 controls as outlined in the ORDINANCE until such time as stipulated in the ordinance. If additional equipment is to be used on a project that was not on the original equipment list submitted to the DEPARTMENT, the Contractor must follow the same procedure as outlined above. Short term usage of equipment shall be as stated in section 30-952(3)(c)(1) of the ORDINANCE.

The Contractor shall submit copies of monthly summary reports to the DEPARTMENT and include certified copies of the ULSD fuel delivery slips for diesel fuel delivered to the jobsite for the reporting time period, noting the quantity of diesel fuel used.

The ORDINANCE is attached and made a part of this contract. Contact information for the Department of Environmental Control is given below.

Basis of Payment. Any costs associated with compliance with this special provision and the Green Construction Ordinance shall be considered as included in the contract unit prices bid for the various items of work involved and no additional compensation will be allowed.

Cook County Department of Environmental Control
69 West Washington Street Room 1900
Chicago, IL 60602
Re: Cook County Green Construction Ordinance
Phone: 312-603-8200

09-0-36

ORDINANCE

Sponsored by

THE HONORABLE TODD H. STROGER, PRESIDENT

AND ROBERTO MALDONADO, JOAN PATRICIA MURPHY AND PETER N. SILVESTRI

COUNTY COMMISSIONERS

Co-Sponsored by

THE HONORABLE JOHN P. DALEY, ELIZABETH "LIZ" DOODY GORMAN,

JOSEPH MARIO MORENO, DEBORAH SIMS, ROBERT B. STEELE

AND LARRY SUFFREDIN, COUNTY COMMISSIONERS

COOK COUNTY GREEN CONSTRUCTION ORDINANCE

BE IT ORDAINED, by the Cook County Board of Commissioners that Chapter 30 Environment, Article IX Green Construction, Sections 30-950 through 30-955 of the Cook County Code is hereby enacted as follows:

ARTICLE IX. GREEN CONSTRUCTION

Sec. 30-950. Board of Commissioners findings.

a) Diesel exhaust particle pollution poses a clear and present health risk to the people of Cook County. The United States Environmental Protection Agency has classified diesel exhaust as a likely human carcinogen, and has identified diesel particulate matter and diesel exhaust organic gases as toxic air pollutants. Diesel exhaust is also a prime contributor to airborne fine particle pollution that is linked to premature death and other serious cardiovascular and pulmonary problems such as heart attacks, abnormal heart rhythms, atherosclerosis, stroke, asthma attacks, permanent respiratory damage and retardation of lung growth in children.

b) Cook County is a USEPA designated non-attainment area for fine particulate matter pollution.

c) The health impacts from diesel emissions particularly affect children, the elderly, and people with weakened immune systems.

d) Particularly high concentrations of diesel emissions often occur in heavily traveled transportation corridors, intermodal yards, bus depots, and construction sites; these diesel "hot spots" often are found in densely populated, urban areas, disproportionately impacting ethnic minorities and people of lower economic status.

e) Diesel engine crankcases also are a source of emissions that can seep into the cabin and expose vehicle drivers and passengers to harmful diesel emissions.

f) Diesel exhaust also contains black carbon emissions, which contribute to global climate change.

g) Reduction of diesel emissions can help address these human health and environmental problems.

h) The United States Environmental Protection Agency has enacted requirements over the past few yeas requiring the substantial reduction of emissions from new diesel engines in both heavy duty highway vehicles and land-based non-road equipment. However, these regulations do not apply to any of the over 11 million existing diesel engines in the United States, most of which emit substantially more pollution and often remain in service for 10 to 30 years, depending on the type of engine and equipment.

i) Practical, cost-effective measures to substantially reduce diesel particulate emissions are available today, and can be applied to many existing diesel engines. The same technology that limits diesel pollution from new diesel engines can be retrofitted onto existing engines or applied in new replacement engines to reduce diesel emissions by 85% or better.

j) Therefore, the purpose of this ordinance is to minimize the public health risks from exposure to diesel particulate emissions as expeditiously as practicable.

Sec. 30-951. Definitions.

CARB means the California Air Resources Board.

County, as used in this chapter (with the exception of the use of the words to describe or identify the Government or Board of Commissioners thereof), means all of the territory in the County exclusive of the City of Chicago.

Department means the Cook County Department of Environmental Control.

Fleet means one or more diesel vehicles or mobile or stationary diesel engines owned or operated by the same person or group of related persons.

Heavy duty diesel vehicle means a motor vehicle with a gross vehicle weight rating of at least 8,500 pounds that is powered by a diesel engine.

Level 1 Control means a Verified Diesel Emission Control Device that achieves a particulate matter (PM) emission reduction of 25% or more from uncontrolled engine emission levels.

Level 2 Control means a Verified Diesel Emission Control Device that achieves a particulate matter (PM) emission reduction of 50% or more from uncontrolled engine emission levels.

Level 3 Control means a Verified Diesel Emission Control Device that achieves a particulate matter (PM) emission reduction of 85% or more from uncontrolled engine emission levels, or that reduces emissions to less than or equal to 0.01 grams of PM per brake horsepower-hour. Level 3 Control includes repowering or replacing the existing diesel engine with an engine meeting USE PA's 2007 Heavy-duty Highway Diesel

Standards (66 Fed. Reg. 5002), or in the case of a non-road engine, an engine meeting the USE PA's Tier 4 Nonroad Diesel Standards (69 Fed. Reg. 38958); Level 3 Control also includes new diesel engines meeting said emissions standards.

Motor vehicle means any self-propelled vehicle designed for transporting persons or property on a street or highway, including an on-road diesel vehicle.

Nonroad engine means an internal combustion engine (including the fuel system) that is not used in a motor vehicle or a vehicle used solely for competition, or that is not a stationary source, except that this term shall apply to internal combustion engines used to power generators, compressors or similar equipment used in any construction program or project.

Nonroad Vehicle means a vehicle or equipment that is powered by a nonroad engine, fifty horsepower and greater, and that is not a motor vehicle or a vehicle used solely for competition, which shall include, but not be limited to, excavators, backhoes, cranes, compressors, generators, bulldozers and similar equipment; non-road vehicles do not include locomotives or marine vessels.

Prime Contractor means any person or business entity that enters into a public works contract with Cook County.

Public Works Contract means a contract, budgeted at $2,000,000 or more, with a County agency for a construction program or project bid by Cook County involving the construction, demolition, restoration, rehabilitation, repair, renovation, or abatement of any building, structure, tunnel, excavation, roadway, park or bridge; a contract with a County agency for the preparation for any construction program or project involving the construction, demolition, restoration, rehabilitation, repair, renovation, or abatement of any building, structure, tunnel, excavation, roadway, park or bridge; or a contract with a County agency for any final work involved in the completion of any construction program or project involving the construction, demolition, restoration, rehabilitation, repair, renovation, or abatement of any building, structure, tunnel, excavation, roadway, park or bridge.

Stationary Generators means a non-mobile machine that uses diesel fuel to produce electrical energy.

Subcontractor means any person or business entity that enters into a contract with a Prime Contractor as defined herein to perform work on a public works contract with Cook County.

Ultra low sulfur diesel fuel means diesel fuel that has a sulfur content of no more than fifteen parts per million.

US EPA means the United States Environmental Protection Agency.

Verified diesel emission control device means:

a) an emission control device or strategy that has been verified to achieve a specified diesel PM reduction by US EPA or CARB; or

b) replacement or repowering with an engine that is certified to specific PM emissions performance by USE PA or CARB.

Sec. 30-952. Emission reduction.

a) Immediately after the effective date of this ordinance, any solicitation for a public works contract and any contract entered into as a result of such solicitation shall include a specification that all contractors in the performance of such contract shall use Ultra Low Sulfur Diesel fuel for diesel motor vehicles, nonroad vehicles, and stationary generators used in the performance of the contract.

b) Beginning January 1, 2 014, for Prime Contractors, and beginning January 1, 2016 for Subcontractors, any solicitation for a public works contract and any contract entered into as a result of such solicitation shall include a specification that a Prime Contractor and all Subcontractors in the performance of such contract shall not operate any heavy-duty diesel vehicle in the performance of a public works contract unless that vehicle has installed Level 3 Controls and unless such controls are properly maintained and operating (as provided by regulations promulgated pursuant to this act). Except that, upon provision by the Prime Contractor or Subcontractors to the agency of appropriate and sufficient documentary evidence:

(1) Subsection (b) shall not apply to any heavy-duty diesel vehicle on the construction site working three days or less over the life of the project.

(2) Subsection (b) shall not apply to any heavy-duty diesel vehicle with respect to which the Department makes a written finding that such vehicle cannot be retrofit with Level 3 Controls, in which case such fleet owner or operator shall install Level 2 Controls that are available and appropriate for such vehicle as determined by the Department. If the Department makes a written finding that any such vehicle cannot be retrofit with Level 2 controls, said vehicle shall be retrofit with Level 1 Controls that are available and appropriate for such vehicle as determined by the Department.

(3) Any heavy-duty diesel vehicle that has operational Level 2 Controls installed prior to the effective date of this act shall have an additional one year to meet the requirements of Subsection (b).

c) Within two years after the effective date of this ordinance, any solicitation for a public works contract and any contract entered into as a result of such solicitation shall include a specification that all contractors in the performance of such contract shall not operate any diesel nonroad vehicle in the performance of a public works contract unless that vehicle has installed Level 2 Controls and unless such controls are properly maintained and operating (as provided by regulations promulgated pursuant to this act). Except that, upon provision by the contract or to the agency of appropriate and sufficient documentary evidence:

(1) Subsection (c) shall not apply to any diesel nonroad vehicle on the construction site working three days or less over the life of the project.

(2) Subsection (c) shall not apply to any diesel nonroad vehicle with respect to which the Department makes a written finding that such vehicle cannot be retrofit with Level 2 Controls, in which case such fleet owner or operator shall install Level 1 Controls that are available and appropriate for such vehicle as determined by the Department.

(3) Any diesel nonroad vehicle that has operational Level 1 Controls installed prior to the effective date of this act shall have an additional one year to meet the requirements of Subsection (c).

d) Beginning January 1, 2014, for Prime Contractors, and beginning January 1, 2016 for Subcontractors, any solicitation for a public works contract and any contract entered into as a result of such solicitation shall include a specification that a Prime Contractor and all Subcontractors in the performance of such contract shall not operate any diesel nonroad vehicle in the performance of a public works contract unless that vehicle has installed Level 3 Controls and unless such controls are properly maintained and operating (as provided by regulations promulgated pursuant to this act). Except that, upon provision by the Prime Contractor or Subcontractors to the agency of appropriate and sufficient documentary evidence:

(1) Subsection (d) shall not apply to any diesel nonroad vehicle on the construction site working three days or less over the life of the project.

(2) Subsection (d) shall not apply to any diesel nonroad vehicle with respect to which the Department makes a written finding that such vehicle cannot be retrofit with Level 3 Controls, in which case such fleet owner or operator shall install Level 2 Controls that are available and appropriate for such vehicle as determined by the Department.

(3) Any diesel nonroad vehicle that has operational Level 2 Controls installed prior to the effective date of this act shall have an additional one year to meet the requirements of Subsection (d).

Sec. 30-953. Costs.

All costs associated with meeting these requirements are incidental to the overall contract. No additional time or monies will be granted to the Prime Contractor for compliance with these requirements and any associated regulations.

Sec. 30-954. Compliance.

a) Thirty days before beginning work, the Prime Contractor shall submit to the Department for approval a list of all heavy-duty diesel vehicles, nonroad vehicles, and stationary generators to be used on the project. The list shall include the following:

(1) Prime Contractor and Subcontractor name and address, plus contact person responsible for the vehicles or equipment.

(2) Equipment type, manufacturer, engine model year, engine certification (Tier rating), ECM calibration, horsepower, plate, serial number, and expected fuel usage and/or hours of operation.

(3) For the pollution control technology installed: technology type, serial number, make, model, manufacturer, EPA/CARB verification number/level, and installation date.

b) If the Prime Contractor subsequently needs to bring on site equipment not on the list, the Prime Contractor shall submit the request in writing for prior approval. Additional equipment shall comply with all contract conditions.

c) During periods of inactivity, idling of diesel on road motor vehicles and nonroad vehicles shall be minimized and shall not exceed the time allowed under state and local laws.

d) Any public works contract shall provide for enforcement of the contract provisions required by Section 3 and penalties for noncompliance of such provisions.

Sec. 30-955. Enforcement.

a) Any solicitation for a public works contract subject to the provisions of this section and any contract entered into as a result of such solicitation shall include provisions authorizing independent monitoring and inspection of the Prime Contractor and Subcontractor's compliance with the requirements of this section and requiring that the Prime Contractor and Subcontractor comply with this section. The Prime Contractor shall be liable for a fee of $200 for the review of Prime Contractor and Subcontractor's compliance with the provisions of this section, and the County may withhold and deduct the fee from monies otherwise due the Prime Contractor.

b) All vehicles and equipment to which these requirements are applicable will be subject to random inspections to ensure full compliance with these requirements. If any equipment is found to be non-compliant, the Prime Contractor, Subcontractor or Supplier must remove or retrofit this equipment or vehicle within 24 hours or be subject to liquidated damages pursuant to subdivision (c) of this section until that piece of equipment or vehicle is removed from Project.

c) In the event of a violation of any provision of this section, except as provided, in subdivision (d) of this section, liquidated damages shall be assessed against the Prime Contractor in the amount of $5,000 for each violation (with each piece of noncomplying equipment and each day of noncompliance being a separate violation, not to exceed a total of $50,000 for any one piece of equipment). Said liquidated damages are not imposed as a penalty but as an estimate of the damages that the County will sustain from delay in completion of the work, as well as resultant damages to public health of its citizens, which damages by their nature are not capable of precise proof. The County may withhold and deduct from monies otherwise due the Prime Contractor the amount of liquidated damages due the County.

d) No Prime Contractor or Subcontractor shall make a false statement or claim with respect to any matter material to compliance with the provisions of this section to the County. Any Prime Contractor or Subcontractor making such a false statement shall pay the County up to $10,000 for each such statement as liquidated damages pursuant to the provisions of subdivision (c) of this section.

e) Fees and liquidated damages paid to the County under this section shall be placed in the Cook County Environmental Management Fund.

Sec. 30-956. Regulations.

Within six months of the effective date of this act, the Department shall, after written notice and public hearing, promulgate regulations implementing the provisions of this act.

Effective date: This Ordinance shall take effect upon adoption.

Approved and adopted this 19th day of May 2009.

TODD H. STROGER, President

Cook County Board of Commissioners

Attest: DAVID ORR, County Clerk.

SPECIAL PROVISION
FOR
PROCESSING OF EXTRA WORK PAYMENT REQUESTS

Contractor's payment requests for Extra Work as identified in Article 104.02 of the Standard Specifications and the Special Provision for Contract Extra Work shall be processed in accordance with Article 109.04 of the Standard Specifications and the following additional procedures:

1) Contractor shall invoice the County for such Extra Work in accordance with the lump sum price, unit price, or force account as agreed to by the Engineer and Contractor.

2) Force account billing for equipment expense shall follow the applicable volume of the Equipment Watch Rental Rate Blue Book (Blue Book). Determination of equipment rates shall follow the IDOT Construction Memorandum 08-09. Also, a copy of the Blue Book calculation for each piece of equipment shall be included with the force account billing.

3) Contractor shall submit invoice for such Extra Work after the Extra Work has been fully completed by Contractor within sixty (60) days of completion of the work.

4) Within sixty (60) days after receipt of the invoice, the Engineer will review the Contractor's invoice and determine whether the invoice complies with the above. If the Engineer disapproves the invoice, the Engineer shall give Contractor notice of the reasons for such disapproval and the Contractor shall resubmit a corrected invoice for the Engineer's review. The County shall have an additional thirty (30) days to review and determine whether that the corrected invoice complies with the above.

5) Once the Engineer determines that the invoice complies with the above, the Engineer shall present a recommendation for change in plan for the specific items of extra work. The Superintendent shall execute a change order for the specific items of extra work and submit such change order to the Cook County Chief Procurement Officer, or where appropriate, to the County Board for approval.

6) Within thirty (30) days of the Board's or the Cook County Chief Procurement Officer's approval of the change order, payment shall be reflected under the specific items of extra work completed by the Contractor and the corresponding amount shall be deleted from the Contract Extra Work item.

SPECIAL PROVISION
FOR
ENGINEER'S FIELD OFFICE

This Special Provision amends the provisions of the Standard Specifications for Road and Bridge Construction and shall be construed to be a part thereof.

670.02 Engineer's Field Office Type A. Amend the following of Article 670.02, paragraph 6:

(i) A minimum of two communication paths. The configuration shall include:

(1) Internet Connection. A commercial grade internet service connection using telephone DSL, cable broadband or CDMA wireless technology with a MINIMUM bandwidth of 768 kbs. Additionally, an 802.11 g/N wireless router shall be provided, which will allow connection by the Engineer and up to four Department Staff. All costs related with equipment, installation, maintenance and service shall be included.

The Cook County Department of Transportation and Highways Engineering Computer Division contact person is as follows:

Mo Al-Khouja
Cook County Administration Building
Room 2400
69 West Washington Street
Chicago, Illinois 60602-3007
Work: (312) 603-1753
E-mail: M.Al-Khouja@cookcountyil.gov

(2) Telephone Lines. Three separate telephone lines with voicemail shall be provided.

(j) One digital copy machine with an automatic feed tray storing at least 30 sheets of paper, capable of reproducing prints as black lines on white paper up to 11 x 17 in. (280 x 432 mm) in size. Reproduction paper (8.5 x 11 in., 8.5 x 14 in., and 11 x 17 in.) shall be supplied to the satisfaction of the Engineer. Maintenance, activating agent and power source for the copy machine shall be included.

The digital copy machine shall also be capable of scanning to / printing from a computer and faxing over a telephone line. All cables, support equipment, software, installation and technical support required to make and keep the equipment operational for up to four computers shall be included.

The digital copy machine, software and support equipment must be compatible with the most current version of Windows operating system.

(k) One electric hot and cold water dispenser. 5 gallon and 0.5 liter bottles of water shall be supplied to the satisfaction of the Resident Engineer.

(l) One electric paper shredder capable of shredding a minimum 15 sheets at a time.

670.02 Engineer's Field Office Type A. Add the following to Article 670.02, paragraph 6:

(m) Three (3) new cellular phones with the capacity for both cellular call and two (2) way communication (Nextel or equal), established voice mail, hands free adaptors, belt clips and car adaptors. These cellular phones will be for exclusive use by the Engineer and the Engineer's support staff. All of the cellular phones and services must be compatible with each other. Maintenance and operating costs of the cellular phones shall be included.

(n) One digital camera with 8 megapixel minimum resolution, batteries to operate the camera, USB cable, minimum 8 GB memory card and digital camera case.

(o) A new upright bagless vacuum cleaner with a hepa-filter or new shop vacuum with a Hepa-Filter and any miscellaneous cleaning supplies necessary for the Engineer to maintain the Field Office.

A weekly cleaning service for the field office shall be provided.

(p) The following items are suggested office and field supplies. These items are subject to revision by the Resident Engineer, must be coordinated with the Resident Engineer prior to purchase, and shall be furnished to the satisfaction of the Resident Engineer prior to commencement and for the duration of the project.

If no pay item for Engineer's Field Office is included in the contract or used by the Department, the following items shall be incidental to the contract.

These items will not be returned at the conclusion of the contract.

OFFICE:

Adjustable Hole Punch, Black (3-Hole)	1 Each
Bankers Box, Legal size With String and Button Closure	4 Pack
Binder Clips, Large, 2", Box of 12 Each	2 Each
Binder Clips, Medium, 1 ¼", Box of 12 Each	2 Each
Binder Dividers, Avery index marker or equivalent	1 Each
Binder, Black 1" Capacity	1 Each
Binder, Black, 1-1/2" Capacity	2 Each
Binder, Black, 3" Capacity	1 Each
Calendar, At-A-Glance 3-Month Wall or equivalent	1 Each
Calendar, At-A-Glance Compact Desk Calendar Base and Calendar Refill	1 Each

3" x 3 ¾" or equivalent	
Clipboard, Legal	2 Each
Correction Fluid, Multipurpose, White	1 Each
DVD Cases, Slim Line, 25 Count	1 Pack
DVD Discs, R.W., 25 Count	1 Pack
Folders, Manila 250 Count Letter 1/3 Cut File	1 Box
Highlighters, Assorted Fluorescent Colors, 4 Count	1 Pack
Labels, Multipurpose White 500 Count, 3/4" x 1 ½"	1 Pack
Letter Trays, Stackable, Pack of 6	1 Each
Markers, Large, Permanent, Black	12 Each
Markers, Sharpie, Black or equivalent	12 Each
Memory Card, 2 Gig SD for Digital Camera	1 Each
OIC, Ideal Clamps, Small Box of 50	2 Each
Paper Clips, Jumbo No. 1, Regular, Box of 100	2 Each
Paper Clips, No. 1, Regular, Box of 100	2 Each
Paper, Quadrille Pad, 8 ½" x 11"	6 Each
Paper, Standard Canary Letter Pads, 6 Count, 8 ½" x 11 ¾"	1 Pack
Pen, Black	2 Pack
Pen, Red	1 Pack
Pencil, Lead Refill, 0.5 mm, Tube of 12	2 Each
Pencils, Disposable	2 Pack
Pencils, Color (Green)	1 Pack
Pencils, Color (Orange)	1 Pack
Pencils, Color (Red)	1 Pack
Pencils, Color (Yellow)	1 Pack
Pencils, Pentel Forte or equivalent, Automatic Pencil, 0.5 mm	3 Each

Pencils, Zebra Rubber Sharpo Mechanical Pencil or equivalent	2 Each
Post-It Memo Cubes, 3 7/8" x 3 7/8", Cube of 300 Sheets	1 Each
Post-It Notes, Yellow, 12 Count 3" x 3"	1 Pack
Rubber Bands, #16, 1 lb., 2 " x 1/16"	1 Each
Rubber Bands, #32, 1 lb., 3" x 1/8"	1 Each
Scissors, Deskwork's or equivalent	1 Each
Staple Remover, Pinch Type	1 Each
Stapler, Black Deluxe Standard	1 Each
Tape Dispenser	1 Each
Tape, Transparent Refills ¾"	6 Each

FIELD:

Ruler, 6 ft., inch/tenth	6 Each
Tape, 100 ft., Fiberglass with Handle	1 Each
Tape, 25 ft. inch/tenth, Retractable, Lufkin or equivalent	2 Each
Wheel, Measuring English	1 Each

The estimated cost for office and field supplies shall be as follows:

Bid Amount		Approximate Cost
Up to	$1,000,000	$ 625
$1,000,000	$3,000,000	$ 750
$3,000,000	$5,000,000	$ 875
Over	$5,000,000	$1,000

SPECIAL PROVISION
FOR
CONSTRUCTION DEBRIS

Add the following to the third paragraph of Article 202.03 of the Standard Specifications:

"The Contractor shall not conduct any generation, transportation, or recycling of construction or demolition debris, clean or general or uncontaminated soil generated during construction, remodeling, repair, and demolition of utilities, structures, and roads that is not commingled with any waste, without the maintenance of documentation identifying the hauler, generator, place of origin of the debris or soil, the weight or volume of the debris or soil, and the location, owner, and operator of the facility where the debris or soil was transferred, disposed, recycled or treated. This documentation must be maintained by the Contractor for 3 years."

SPECIAL PROVISION
FOR
CLEAN CONSTRUCTION AND DEMOLITION DEBRIS

In accordance with the State of Illinois Environmental Protection Act, the Cook County Department of Transportation and Highways (the Department), as "Site Owner" at the subject highway improvement location, is required to certify that all materials to be taken to an uncontaminated soil fill location, including uncontaminated soil and clean construction and demolition debris, are to be certified as uncontaminated soil.

The Department has performed sufficient testing at the site and has determined that soils to be excavated per the plans as well as existing concrete and asphalt pavement materials meet the criteria to be considered clean construction and demolition debris. Exceptions are listed below*. In accordance with the Act, the certification is made per IEPA Form LPC-663. A copy of the completed Form LPC-663 has been attached to this special provision. The original form is available from;

Ms. Holly Cichy
Chief Engineer of Construction
Cook County Department of Transportation and Highways
69 W. Washington St., 23rd Floor
Chicago, IL 60602
(312) 603-1613

The Contractor is expected to be thoroughly familiar with the provisions of the Environmental Protection Act as it relates to proper disposal of excavated material and construction debris. Should the Contractor choose to dispose of surplus soil material at a registered uncontaminated soil fill location, this form must be submitted to the operator of that location before any materials can be disposed of at that site. The Contractor should be advised that, even with the submittal of the properly executed Form LPC-663, the fill operators retain the right to reject any or all loads from a particular construction site based on their own determination of the suitability of material from that site. Each certification covers only material from that specified job site. The Contractor shall take care not to stockpile or mix together material from different sites before taking that material for disposal.

This special provision is not to be construed as a requirement that obligates the Contractor to dispose of surplus material at a registered uncontaminated soil fill location.

* Based on the Department's investigation and location history including the possible determination of a LUST site or other risk indicators, it has been determined that materials excavated at the following locations may not meet the Clean Construction and Demolition Debris requirements:

*** LOCATIONS TO BE LISTED, IF APPLICABLE**

This Special Provision will modify Article 669 of the Standard Specifications as follows:

The Contractor is advised to consider the cost of disposing of all clean construction and demolition debris as delineated herein and reflect those costs in their bids for **EARTH EXCAVATION** or other appropriate items which may include soils removal. Pay items for **NON-SPECIAL WASTE DISPOSAL**, **SPECIAL WASTE DISPOSAL**, **HAZAROUS WASTE DISPOSAL** and **SPECIAL WASTE PLANS AND REPORTS** have been included in the Summary of Quantities in order to provide for the disposal of materials in those

locations listed above. The requirements for removal and disposal of such materials shall be in accordance with Article 669.

SPECIAL PROVISION
FOR
SURVEY MONUMENTS

Description. The Contractor shall cause all work necessary to be performed for the preservation, relocation and erection of Survey Monuments at all points hereinafter described. Installation shall be made in accordance with the details shown on plans.

Survey Monuments. All section, quarter section or other government established corners which are discovered or known to exist within the limits of the proposed improvement are to be re-established (as later specified) in accordance with the details shown on the Standard Design for Cook County Survey Monuments. All section corners located within the project limits or as called out on the plans will be located by a Registered Land Surveyor and a physical monument installed at the located corner in accordance with the details specified below. This will be done even if an existing monument is not found at that corner.

Placing Monuments. When monuments are located within the limits of the proposed improvements, they shall not be disturbed by the Contractor until a Registered Land Surveyor shall have made such reference as may be necessary to preserve their location. After the pavement is laid, the original location of the monuments shall be identified by placing in position, vertically above or below the original location, the new monuments which shall comply with details shown on the Standard Designs. In case monuments do not fall within the limits of the pavement, the monument shall be placed in a 2-1/2 inch wrought iron pipe, 3 feet long, driven flush with the ground surface and grouted as shown on the aforesaid Standard design. The plugs for this purpose shall be furnished by a Registered Land Surveyor and shall be set securely and in a workmanlike manner flush with the surface of the ground or pavement in accordance with the requirements of the law and under the direction of a Registered Land Surveyor. When section corners without existing monumentation are located within the project limits or as specifically directed in the plans, that corner shall be located and monumented as described above.

Plat. The location of all monuments to be preserved, reset or erected within the limits of the improvement shall be shown on a plat or plats which delineates and describes each corner monument. Preparation of the above plat must conform with Illinois Public Act 79-649, entitled "An Act to provide for the perpetuation of land survey Monuments". Each plat shall be recorded by the Surveyor in the office of the County Recorder. Copies of the plat or plats, as recorded and bearing the appropriate document number, shall be furnished to and become the property of the Cook County Department of Transportation and Highways (one copy to the Pavement Geometrics Division - Survey Section and one copy to the Right of Way Bureau).

Basis of Payment. This work will be paid for at the contract unit price each for Survey Momuments, relocated and erected within the limits of the improvement or as specifically directed in the plans, which price shall include the cost of all labor, tools and materials used in the performance of preserving, relocating and identifying the monuments, as well as the salary and expense of the Registered Land Surveyor while engaged in this work.

SPECIAL PROVISION
FOR
CUTTING HOT-MIX ASPHALT SURFACE

Description. This work shall consist of the cutting of the hot-mix asphalt surface wherever indicated and to the depth as shown on the plans and as required by the Engineer.

The hot-mix-asphalt surface shall be cut to a straight line and a vertical plane by a method approved by the Engineer.

It shall be the responsibility of the Contractor to determine the thickness of the existing hot-mix-asphalt surface course as well as underlying pavement layers as may be impacted by the required cutting. No additional compensation will be allowed because of variations from the assumed thicknesses or from the thicknesses shown on the plans.

Basis of Payment. This work will be paid for at the Contract Unit Price per Foot for Cutting Hot-Mix Asphalt Surface.

SPECIAL PROVISION
FOR
TEMPORARY BUTT JOINTS

Description. Immediately after the removal of the existing hot-mix-asphalt surface, Temporary Butt Joints shall be constructed at the saw cut limits of removal. The Butt Joints are to be constructed with Hot-Mix-Asphalt Surface Course or Leveling Binder and compacted as directed by the Engineer. A coated paper bond breaker shall be placed between the Butt Joint and the existing surface.

The Butt Joints shall be removed and the exposed surfaces primed just prior to the placement of the specified Hot-Mix-Asphalt paving material.

Temporary Butt Joints shall be measured in Feet (Meters).

Basis of Payment. The cost of constructing and removing the Butt Joints shall be paid for at the Contract Unit Price per Foot (Meter) for Temporary Butt Joints.

SPECIAL PROVISION
FOR
MANHOLES TO BE RECONSTRUCTED, SPECIAL
CATCH BASINS TO BE RECONSTRUCTED, SPECIAL
VALVE VAULTS TO BE RECONSTRUCTED, SPECIAL

Description. Where conditions warrant that more than 30 inches of a structure must be removed and reconstructed for reasons other than a change in grade, this Special Provision shall prevail. Work shall otherwise conform to the applicable requirements of Article 602 of the State Specifications.

The limits of special reconstruction will vary from structure to structure within the project limits, but shall consist of the removal and replacement of at least the top 30 inches of the existing structure. This work shall be done at the direction of the Engineer and be in accordance with Cook County design standards for the appropriate type structure.

Those structures to have special reconstruction have been designated by (RS) in the plans. A quantity of storm sewer for the replacement of laterals has been included in the Summary of Quantities.

Basis of Payment. This work shall be paid for at the contract unit price each for Manholes to Be Reconstructed, Special; Catch Basins to be Reconstructed, Special; or Valve Vaults to be Reconstructed, Special which price shall include all labor, materials, excavation and backfill.

SPECIAL PROVISION
FOR
LIDS AND FRAMES AND LIDS

Description. Where the term lids is used in the Summary of Quantities, on County Transportation and Highways Standards and in the Plans, it shall be considered synonymous with the term grates and be subject to the provisions of Article 604 of the State Standard Specifications for Road and Bridge Construction.

Basis of Payment. This work shall be paid for at the contract unit price each for Lids and for Frames and Lids of the type specified, which price shall include the cost of the mortar bed.

SPECIAL PROVISION
FOR
FRAMES AND LIDS TO BE ADJUSTED, SPECIAL

Description. This work shall consist of the stage adjustment of frames and lids or grates of existing drainage and utility structures within the pavement area where the existing bituminous surface is to be removed. All work shall be in accordance with the applicable portions of Section 353, 406 and 603 of the Standard Specifications, at the locations shown in the plans or as designated by the Engineer and as herein specified.

Materials and Construction Methods. Stage I shall consist of a minimum twelve-inch (12 inch) wide removal of the pavement area around the structure; lowering of the existing frame to the elevation of the milled pavement surface; and backfilling with six-inch (6 inch) thick compacted bituminous material approved by the Engineer.

Stage II shall consist of removing the bituminous material, adjusting the frame to its final surface elevation and the replacement of the removed bituminous material with P.C. Concrete and/or Bituminous Concrete Material, meeting the requirements of Sections 353 and/or 406 of the Standard Specifications with the exception Bituminous Binder will not be allowed where Type 5 frames are encountered.

In lieu of lowering the existing frames with closed lids, the Contractor may remove and store the frame and lids and cover the existing structure with a one-half inch thick metal plate, flush with the milled surface, which will remain the property of the Contractor upon its replacement with the existing frame and lid.

Basis of Payment. This work will be paid for at the contract unit price each for Frames and Lids to be Adjusted, Special, which price shall be payment in full for adjusting the structure as herein required.

Existing broken frames or lids shall be removed and disposed of by the Contractor and shall be replaced as directed by the Engineer. Replacement frames and lids will be paid for in accordance with Article 109.04 of the Standard Specifications unless a separate pay item has been provided.

The adjustment of privately owned utility structures is not a part of this contract and will be done by the respective owners. On all Metropolitan Sanitary District structures, only P.C. Concrete Precast Rings shall be used for adjusting frames.

For projects located in the City of Chicago, the temporary placement of asphalt or steel plates over existing valve vaults is strictly prohibited. Access to these structures must be preserved at all times during the construction period. Adjustment of these valve vault structures in the City of Chicago will not be performed according to this special provision.

SPECIAL PROVISION
FOR
COOPERATION WITH UTILITIES

This special provision amends the provisions of Article 105.07 of the Standard Specifications and includes a section clarifying the utility information provided in the plans and specifications.

105.07 - Cooperation with Utilities. Revise the last paragraph regarding (a) known Utilities to read:

"No additional compensation will be allowed for any delays, inconveniences, or damage sustained by the Contractor due to any interference from the said utility appurtenances or the operation of moving them either by the utility company or by him; or on account of any special construction methods required in prosecuting his work due to the existence of said appurtenances either in their present or relocated positions."

105.07 - Cooperation with Utilities. Delete subarticle 105.07 (b) Unknown Utilities and substitute the following:

(b) Unknown Utilities. The requirements stated above for known utilities shall apply to unknown utilities.

Examination of Plans, Specifications, Special Provisions and Site of Work.

The bidder shall, before submitting a bid, carefully examine the provisions of the contract. The bidder shall inspect in detail the site of the proposed work, investigate and become familiar with all the local conditions affecting the contract and fully acquaint themselves with the detailed requirements of construction. Submission of a bid shall be a conclusive assurance and warranty the bidder has made these examinations and the bidder understands all the requirements for the performance of the work. If his/her bid is accepted, the bidder shall be responsible for all errors in the proposal resulting from his/her failure or neglect to comply with these instructions. The Department will, in no case, be responsible for any costs, expenses, losses, or change in anticipated profits resulting from such failure or neglect of the bidder to make these examinations.

The bidder shall take no advantage of any error or omission in the proposal and advertised contract. Any prospective bidder who desires an explanation or interpretation of the plans, specification, or any of the contract documents shall request such in writing from the Department, in sufficient time to allow a written reply by the Department that can reach all prospective bidders before the submission of their bids. All information and changes made to the contract will be communicated through an addendum. Only changes made through the addendum will be binding to the Department. When the plans or special provisions include information pertaining to the location of underground utility facilities, such information represents only the opinion of the Department as to the location of such utilities and is only included for the convenience of the bidder. The Department assumes no responsibility whatever in respect to the sufficiency or the accuracy of the information shown on the plans relative to the location of underground utility facilities. It shall be the Contractor's responsibility to determine the actual location of all such facilities including field verification of both vertical and horizontal locations relative to the work. He shall also obtain from the respective utility companies detailed information relative to the location of their facilities and the working schedules of the utility companies for removing or adjusting them.

It is understood and agreed that the Contractor has considered in his bid all of the permanent and temporary utility appurtenances in their present or relocated positions. The Contractor's attention is directed to the fact that the various utility companies may be relocating and constructing facilities within the project limits concurrent with the Contractor's operations. The Contractor shall coordinate his activities with the various utility companies, at all times, and may be required to work at other locations of the improvement until relocation and construction is completed by the utility company. The Contractor is advised that the relocation times and schedules listed in the special provision "Status of Utilities to be Adjusted" are only rough estimates and no extra compensation will be allowed for delays resulting from any work performed by a utility company or for their failure to meet said relocation schedule.

P:\Special Provisions - 2012\F_Drainage 156-210\185 Cooperation with Utilities.docx

SPECIAL PROVISION
FOR
WATERPROOFING OF EXISTING SANITARY MANHOLES

Description. This work shall consist of waterproofing the exterior top portion of existing sanitary manholes to prevent the infiltration of surface water into the sanitary system and shall conform to Section 602 of the Standard Specifications with the following additional requirements:

Materials and Construction. At existing sanitary manholes to be adjusted, and/or reconstructed, the contractor shall expose a maximum of 12 inches of the cone section and remove the frame and any adjusting rings.

The existing manhole frame and concrete adjusting rings shall be separated from the cone and each other. Care shall be taken to prevent damage to the concrete rings and frame while removing the mortar adhering to the rings and frame.

Once final grade is established, the concrete adjusting rings shall be reset in either a 3/8 inch thick bituminous mastic bed or a ¼ inch thick bed of redi-seal asphalt compound or an approved equal.

The frame shall be set on either a 3/8 inch thick bituminous plastic bed or two side by side courses of 1 inch rope butyl gasket material or an approved equal.

A 3/8 inch layer of bituminous mastic shall be applied to the outside of the concrete adjusting rings and/or frame making sure to completely cover the external surfaces with mastic. The mastic should extend 6 inch to 12 inch below the top of the cone section.

A sheet of polyvinyl chloride with a minimum thickness of 8 mils or E-Z wrap rubber or equivalent shall be set into the outside mastic material making sure the plastic sheet or wrap rubber is held securely to the frame and cone with polywrap tape before backfilling.

Basis of Payment. This work will be paid for at the contract unit price per each for Waterproofing Existing Sanitary Manholes to be Adjusted; Waterproofing Existing Sanitary Manholes to be Reconstructed; Waterproofing Sanitary Manholes to be Reconstructed, Special; Waterproofing Sanitary Frames and Lids to be Adjusted; or Waterproofing Sanitary Frames and Lids to be Adjusted, Special.

SPECIAL PROVISION
FOR
SEEDING

This Special Provision amends the provisions of the Standard Specifications and shall be construed to be a part thereof.

250.04 Fertilizer and Agricultural Ground Limestone Application. Revise the third paragraph to read:

When fertilizer is specified, 180 lbs. of fertilizer nutrients per acre shall be applied at a 1:1:1 ratio as follows:

Nitrogen Fertilizer Nutrients	60 lbs./acre
Phosphorus Fertilizer Nutrients	60 lbs./acre
Potassium Fertilizer Nutrients	60 lbs./acre

250.07 Seeding Mixtures. Revise Table I Seeding Mixtures

For Class I as follows: Substitute the Seeding Mixture indicated below for Seeding Class I, regardless of the season;

80 lbs./acre Kentucky Bluegrass

45 lbs./acre Kentucky 31 or Alta Fescue

30 lbs./acre Perennial Ryegrass

15 lbs./acre Redtop or Creeping Red Fescue

SPECIAL PROVISION
FOR
WORK ZONE TRAFFIC CONTROL SURVEILLANCE

Revise Article 701.10 of the Standard Specifications to read:

"The Contractor shall conduct inspections of the worksite at a frequency that will allow for the timely replacement of any traffic control device that has become displaced, worn, or damaged. A sufficient quantity of replacement devices, based on vulnerability to damage, shall be readily available to meet this requirement."

Delete Articles 701.19(d) and Article 701.20(g) of the Standard Specifications.

SPECIAL PROVISION
FOR
TRAFFIC PROTECTION

General. This item of work shall include furnishing, installing, maintaining, replacing, relocating and removing all traffic control devices used for the purpose of regulating, warning or directing traffic and protecting workers during the construction or maintenance of this improvement.

Traffic protection shall be provided as called for in the plans, these Special Provisions, applicable Traffic Control Highway Standards, applicable sections of the Standard Specifications, or as directed by the Engineer.

The governing factor in the execution and staging of work for this project is to provide the motoring public with the safest possible travel conditions along the roadway through or around the construction zone. The Contractor shall arrange his operations to keep the closing of any lane of the roadway to a minimum. Where the traffic of any building in the area of the proposed improvement is of an emergency nature, such as Hospital, Fire or Police Station traffic, the Contractor shall provide for free movement of such traffic during the course of construction.

Traffic Control Devices include signs and their supports, signals, pavement markings and markers, traffic cones, barricades with sand bags, plastic drums, channelizing devices, warning lights, arrow boards, flaggers, or any other device used for the purpose of regulating, detouring, warning or guiding traffic through or around the construction zone, including required devices and marking approaching and departing the construction zone.

The Contractor is required to conduct routine inspections of the worksite at a frequency that will allow for the prompt replacement of any traffic control device that has become displaced, worn or damaged to the extent that it no longer conforms to the shape, dimensions, color and operational requirements of the "Manual on Uniform Traffic Control Devices for Streets and Highways (MUTCD), the Traffic Control Standards and the "Quality Standard for Work Zone Traffic Control Devices" issued by the Illinois Department of Transportation or will no longer present a neat appearance to motorists. A sufficient quantity of replacement devices, based on vulnerability to damage, shall be readily available to meet this requirement.

The Contractor shall be responsible for the proper location, installation and arrangement of all traffic control devices. Special attention shall be given to advance warning signs during construction operations in order to keep lane assignment consistent with barricade placement at all times. The Contractor shall immediately remove, cover or turn from the view of the motorists all traffic control devices which are inconsistent with detour or lane assignment patterns and conflicting conditions during the transition from one construction stage to another. When the Contractor elects to cover conflicting or inappropriate signing, materials used shall totally block out reflectivity of the sign and shall cover the entire sign. The method used for covering the signing shall meet with the approval of the Engineer.

The Contractor shall coordinate all traffic control work on this project with adjoining or overlapping projects, including barricade placement necessary to provide a uniform traffic detour pattern. When directed by the Engineer, the Contractor shall remove all traffic control devices which were furnished, installed and maintained by him under this contract, and such devices shall remain the property of the Contractor. All

traffic control devices shall remain in place until specific authorization for relocation or removal is received from the Engineer.

The Contractor shall ensure that all traffic control devices installed by him are functional and effective 24 hours each day.

107.15 Dirt on Pavement or Structures. Add the following after the first paragraph of this Article:

When ordered by the Engineer, the Contractor shall use some method to allay dust and prevent a nuisance. This shall be done preferably by sprinkling the Subgrade or the portion of pavement used by trucks or busses with water. If conditions warrant, this shall receive constant attention by the Contractor. Calcium Chloride shall not be used for this purpose. No extra compensation shall be allowed the Contractor for this work.

Signs. All signs except those referring to daily lane closures shall be post mounted in accordance with Standard 701901 for all projects that exceed four days.

Construction signs referring to daytime lane closures during working hours shall be removed, covered or turned away from the view of the motorists during non-working hours.

Prior to the beginning of construction operations, the Contractor will be provided a sign log of all existing signs within the limits of the construction zone. The Contractor is responsible for verifying the accuracy of the sign log. Throughout the duration of this project, all existing traffic signs shall be maintained by the Contractor. All provisions of Article 107.25 of the Standard Specifications shall apply except the third paragraph shall be revised to read: "The Contractor shall maintain, furnish and replace at his own expense, any traffic sign, or post which has been damaged or lost by the Contractor or a third party".

"Fresh Oil" signs (W21-2) shall be used when prime is applied to pavement that is open to traffic. The signs are to remain until tracking of the prime ceases. The sign shall be erected a minimum of 500 feet preceding the start of the prime and on all side roads within the posted area. The "Fresh Oil" sign on the side road shall be posted a minimum of 200 feet from the mainline pavement.

"Rough Grooved Surface" signs (W8-I107) shall be used when the road has been cold milled and open to traffic. The signs shall remain in place until the milled surface condition no longer exists. These signs shall be erected a minimum of 500 feet preceding the start of the milled pavement and on all side roads within the posted area. The "Rough Grooved Surface" signs on the side roads shall be posted 200 feet from the mainline pavement. All signs shall have an 18" x 18" orange flag and amber flashing light attached.

Whenever a lane is closed to traffic using Standard 701606, 701601, or 701701, the pavement width transition sign (W4-2R or W4-2L) shall be used in lieu of "Workers" sign (W21-1 or W21-1a).

Whenever any vehicle, equipment, workers or their activities infringe on the shoulder or within 15 feet of the traveled way and the traveled way remains unobstructed, then the applicable Traffic Control Standard shall be 701006, 701011, 701101, or 701701. "Shoulder Work Ahead" sign (W21-5(0)-48) shall be used in lieu of the "Workers" sign (W21-1 or W-21-1a).

The Contractor shall provide and erect any other signs that are required for traffic safety operations and the conveyance of traffic information to the motorist, which may not be included in the Traffic Control

Standards. The requirement for these signs shall be determined by and installed at the direction of the Engineer.

Barricades: Any drop off greater than 3 inches, but less than 6 inches within 8 feet of the pavement edge shall be protected by Type I or II barricades equipped with mono-directional steady burn lights at 100 foot center to center spacing. If the drop off within 8 feet of the pavement edge exceeds 6 inches, the barricades mentioned above shall be placed at 50 foot center to center spacing. Barricades that must be placed in excavated areas shall have leg extensions installed such that the top of the barricade is in compliance with the height requirements of Standard 701901. In addition to the placement of barricades as described above, pavement drop off signs (W8-9a) shall be used along with the barricades and at the direction of the Engineer.

Placement of all signs, barricades or drums shall proceed in the direction of flow of traffic. Removal of all signs, barricades or drums shall start at the end of the construction areas and proceed toward oncoming traffic unless otherwise directed by the Engineer.

All Type I and Type II barricades, drums and vertical panels shall be equipped with a steady burn light when used during hours of darkness unless otherwise stated herein.

Check barricades shall be placed in work areas perpendicular to traffic every 1,000 feet, one per lane and per shoulder, to prevent motorists from using work areas as a traveled way. Two additional check barricades shall be placed in advance of each patch excavation or any other hazards in the work area, the first at the edge of the open traffic lane and the second centered in the closed lane. Check barricades shall be Type I or II and equipped with a flashing light.

Arrow Boards. A flashing arrow board shall be operating at all times when a lane is closed to traffic on a multilane highway. Arrow boards shall be provided and located in a head-on position within each lane closure taper.

Temporary Concrete Barrier Vertical Panels and Lights. Whenever temporary concrete barrier is specified in the plans, vertical panels and steady burning lights meeting the requirement of Articles 1106.01 and 1106.02 of the Standard Specifications and Standard 701901 shall be installed on the barrier at 50 foot centers minimum or at the spacing shown on the plans. The method of mounting shall be approved by the Engineer. Upon conclusion of the work, the panels and lights shall be removed and shall remain the property of the Contractor.

Pedestrian Sidewalk Control. The Contractor shall install, maintain and remove necessary signs and barricades needed to direct pedestrians to usable sidewalks and walkways during the construction in accordance with Traffic Control Standard 701801 or as directed by the Engineer. The Contractor shall make adequate provision for the free passage of foot traffic at all intersecting streets which are to remain open to traffic. The materials or equipment used in the construction of this improvement shall be so placed as to afford access to abutting private properly and to all hydrants and valves with a minimum of inconvenience.

All barricades shall be Type I or II equipped with flashing lights. At each point of closure, sufficient numbers of barricades shall be used to completely close the sidewalk to pedestrian movement. Where construction activities involve sidewalks on both sides of the street, the work shall be staged so that both sidewalks are not out of service at the same time.

107.09 Public Convenience and Safety. Revise the Seventh paragraph of this Article to read as follows:

The following vertical and horizontal restrictions shall pertain to roads as defined in the Illinois Highway Code, Article 2, Division 1, Section 2-101, 2-102, and 2-103 when construction is being performed with the road open to traffic.

The Contractor shall provide a telephone number where a responsible individual can be contacted on a 24-hour-a-day basis to receive notification of any deficiencies regarding traffic control and protection. The Contractor shall dispatch workers, materials and equipment to correct any such deficiencies. The Contractor shall respond to any call from the Department concerning any request for improving or correcting traffic control devices and begin making the requested repairs within two hours from the time of notification.

Personal vehicles shall not park within the right-of-way except in specific areas designated by the Engineer.

The contractor shall maintain at least one lane of traffic at all times on two lane roads and at least one lane in each direction on 4 or more lane roads, during the construction of this project. The Contractor shall also maintain areas to entrances and side roads along the proposed improvement. Interference with traffic movements and inconvenience to owners of abutting property and the public shall be kept to a minimum. Any delays or inconveniences caused to the Contractor by complying with these requirements shall be considered as incidental to the contract, and no additional compensation will be allowed.

On two lane roads, the Contractor is to plan the work so that there will be no open holes in the pavement and that all barricades will be removed from the pavement during non-work hours.

On four or more lane highways, there shall be no open holes in the pavement being used by the traveling public. Lane closures, if allowed, will be in accordance with the applicable standards, any staging details shown in the plans and other applicable contract documents.

The Contractor shall remove all equipment from the shoulders and medians after work hours.

No road closures or restrictions shall be permitted except those covered by the Traffic Control Highway Standards without written approval by the Engineer.

When traveling in lanes open to public traffic, the Contractor's vehicles shall always move with and not against or across the flow of traffic. These vehicles shall enter or leave work areas in a manner which will not be hazardous to, nor interfere with, traffic.

Pavement Markings. Temporary pavement marking paint used on temporary or unfinished surfaces shall be maintained to the highest degree of visibility and reflectivity and on long term projects shall be repainted when the temporary pavement marking shows signs of deterioration or at a minimum of every three (3) months and as directed by the Engineer at no additional cost and is considered as incidental to the cost of Traffic Protection.

Temporary pavement marking shall be applied as solid unbroken lines when used to delineate any pavement transition, turn lane transition and storage bay. Double yellow centerline shall be used across a bridge deck where the distance to be marked is less than 160 feet.

Temporary raised reflective bi-directional (amber) pavement markers (Section 781 and Article 1096.02 of the Standard Specifications) shall be used, and replaced when required, throughout a temporary by-pass detour pavement at no additional cost.

Method of Measurement. Delete: Article 701.19 Method of Measurement

Traffic Protection will not be measured for payment but shall include the furnishing, installing, maintaining, relocation and removal of traffic control devices required in the plans and these special provisions and all temporary pavement marking paint and tape lines, letters and symbols.

Basis of Payment. Delete: Article 701.20 Basis of Payment

This work will be paid for at the lump sum price for TRAFFIC PROTECTION, which price shall be payment in full for all labor, materials, transportation, handling and incidentals necessary to furnish, install, maintain, replace, relocate and remove all traffic control devices when required, such as signing, arrow boards, barricades, plastic drums, road closures, temporary pavement marking paint and tape lines and letters and symbols (Section 780 and Article 1095.02 of the Standard Specifications), temporary concrete barrier vertical panels and lights (Standard 701901), flexible delineators (Standard 701901), prismatic barrier reflectors (Sections 782 and 1097 of the Standard Specifications), temporary raised reflective pavement markers (Section 781 and Article 1096.02 of the Standard Specifications) and all traffic control devices indicated in the plans and specifications. The salvage value of all material removed (including existing traffic signs - when removal is required) shall be reflected in the bid price for this item.

Delays to the Contractor caused by complying with these requirements will be considered incidental to the item for Traffic Protection, and no additional compensation will be allowed.

Payment Adjustments. The Engineer may require additional traffic control to be installed in accordance with standards and/or designs other than those included in the plans. In such cases, the standards and/or designs will be made available to the Contractor at least one week in advance of the change in traffic control. Payment for any additional traffic control required will be in accordance with Article 109.04 of the Standard Specifications.

Revisions in the phasing of construction or maintenance operations, requested by the Contractor, may require traffic control to be installed in accordance with standards and/or designs other than those included in the plans. Revisions or modifications to the traffic control shown in the contract shall be submitted by the Contractor for approval by the Engineer. No additional payment will be made for a Contractor requested modification.

In the event the sum total value of all the work items for which traffic protection is required is increased or decreased by more than ten percent (10%), the contract bid price for Traffic Protection will be adjusted as follows:

Adjust contract price = .25P + .75P [1$\pm$(X-0.1)]

Where "P" is the contract price for Traffic Protection

Where "X" = (Difference between original and final sum total value of all the work items for which protection is required) divided by (Original sum total value of all work items for which traffic protection is required)

The value of work items used in calculating the increase or decrease will include only items which have been added to or deducted from the contract under Article 104.02 of the Standard Specifications and only items which require use of Traffic Protection.

In the event the Department cancels or alters any portion of the contract which results in elimination or noncompletion of any portion of the work, payment for partially completed work will be made in accordance with Article 109.06 of the Standard Specifications.

SPECIAL PROVISION
FOR
RAISED REFLECTIVE PAVEMENT MARKER

This special provision applies to pavement sections where existing surface will be diamond ground or will remain intact, and does not apply to pavement sections where existing surface will be milled, overlaid, removed, or recycled.

The removal of existing raised reflective pavement markers, including base casting and reflective element, shall meet the requirements of Section 783 of the "Standard Specifications for Road and Bridge Construction", except that the pavement shall be repaired to the satisfaction of the Engineer with epoxy that has similar color as pavement, and shall be approved by the Engineer prior to use. This work will be paid for at the contract unit price per each for RAISED REFLECTIVE PAVEMENT MARKER REMOVAL.

The installation of new raised reflective pavement markers shall meet the requirements of Section 781 of the "Standard Specifications for Road and Bridge Construction". To ensure proper installation of the new raised reflective pavement markers, the markers shall be located fore or aft of the existing casting location and on the existing alignment, or as directed by the Engineer. This work will be paid for at the contract unit price per each for RAISED REFLECTIVE PAVEMENT MARKER.

HOT-MIX ASPHALT - DENSITY TESTING OF LONGITUDINAL JOINTS (BDE)

Effective: January 1, 2010
Revised: April 1, 2012

Description. This work shall consist of testing the density of longitudinal joints as part of the quality control/quality assurance (QC/QA) of hot-mix asphalt (HMA). Work shall be according to Section 1030 of the Standard Specifications except as follows.

Quality Control/Quality Assurance (QC/QA). Delete the second and third sentence of the third paragraph of Article 1030.05(d)(3) of the Standard Specifications.

Add the following paragraphs to the end of Article 1030.05(d)(3) of the Standard Specifications:

"Longitudinal joint density testing shall be performed at each random density test location. Longitudinal joint testing shall be located at a distance equal to the lift thickness or a minimum of 4 in. (100 mm), from each pavement edge. (i.e. for a 5 in. (125 mm) lift the near edge of the density gauge or core barrel shall be within 5 in. (125 mm) from the edge of pavement.) Longitudinal joint density testing shall be performed using either a correlated nuclear gauge or cores.

a. Confined Edge. Each confined edge density shall be represented by a one-minute nuclear density reading or a core density and shall be included in the average of density readings or core densities taken across the mat which represents the Individual Test.

b. Unconfined Edge. Each unconfined edge joint density shall be represented by an average of three one-minute density readings or a single core density at the given density test location and shall meet the density requirements specified herein. The three one-minute readings shall be spaced ten feet apart longitudinally along the unconfined pavement edge and centered at the random density test location."

Revise the Density Control Limits table in Article 1030.05(d)(4) of the Standard Specifications to read:

"Mixture Composition	Parameter	Individual Test (includes confined edges)	Unconfined Edge Joint Density Minimum
IL-4.75	Ndesign = 50	93.0 – 97.4%	91.0%
IL-9.5, IL-12.5	Ndesign ≥ 90	92.0 – 96.0%	90.0%
IL-9.5,IL-9.5L, IL-12.5	Ndesign < 90	92.5 – 97.4%	90.0%
IL-19.0, IL-25.0	Ndesign ≥ 90	93.0 – 96.0%	90.0%
IL-19.0, IL-19.0L, IL-25.0	Ndesign < 90	93.0 – 97.4%	90.0%

SMA	Ndesign = 50 & 80	93.5 – 97.4%	91.0%
All Other	Ndesign = 30	93.0 - 97.4%	90.0%"

80246

HMA MIXTURE DESIGN REQUIREMENTS (D-1)

Effective: January 1, 2013.
Revised: January 16, 2013

1) Design Composition and Volumetric Requirements

Revise Article 1030.04(a)(1) of the Standard Specifications to read.

"(1)High ESAL Mixtures. The Job Mix Formula (JMF) shall fall within the following limits.

High ESAL, MIXTURE COMPOSITION (% PASSING) 1/										
Sieve Size	IL-25.0 mm		IL-19.0 mm		IL-12.5 mm		IL-9.5 mm		IL-4.75 mm	
	min	max	min	max	min	max	min	max	min	max
1 1/2 in (37.5 mm)		100								
1 in. (25 mm)	90	100		100						
3/4 in. (19 mm)		90	82	100		100				
1/2 in. (12.5 mm)	45	75	50	85	90	100		100		100
3/8 in. (9.5 mm)						89	90	100		100
#4 (4.75 mm)	24	42 2/	24	50 2/	28	65	28	65	90	100
#8 (2.36 mm)	16	31	20	36	28	48 3/	32	52 3/	70	90
#16 (1.18 mm)	10	22	10	25	10	32	10	32	50	65
#50 (300 µm)	4	12	4	12	4	15	4	15	15	30
#100 (150 µm)	3	9	3	9	3	10	3	10	10	18
#200 (75 µm)	3	6	3	6	4	6	4	6	7	9
Ratio Dust/Asphalt Binder		1.0		1.0		1.0		1.0		1.0 4/

1/ Based on percent of total aggregate weight.

2/ The mixture composition shall not exceed 40 percent passing the #4 (4.75 mm) sieve for binder courses with Ndesign ≥ 90.

3/ The mixture composition shall not exceed 44 percent passing the #8 (2.36 mm) sieve for surface courses with Ndesign ≥ 90.

4/ Additional minus No. 200 (0.075 mm) material required by the mix design shall be mineral filler, unless otherwise approved by the Engineer."

Delete Article 1030.04(a)(4) of the Standard Specifications.

Revise Article 1030.04(b)(1) of the Standard Specifications to read.

"(1) High ESAL Mixtures. The target value for the air voids of the HMA shall be 4.0 percent and for IL-4.75 it shall be 3.5 percent at the design number of gyrations. The VMA and VFA of the HMA design shall be based on the nominal maximum size of the aggregate in the mix, and shall conform to the following requirements.

VOLUMETRIC REQUIREMENTS High ESAL						
	Voids in the Mineral Aggregate (VMA), % minimum					Voids Filled with Asphalt Binder (VFA), %
Ndesign	IL-25.0	IL-19.0	IL-12.5	IL-9.5	IL-4.75 1/	
50	12.0	13.0	14.0	15	18.5	65 – 78 2/
70						65 - 75
90						
105						

1/ Maximum Draindown for IL-4.75 shall be 0.3%
2/ VFA for IL-4.75 shall be 72-85%"

Delete Article 1030.04(b)(4) of the Standard Specifications.

Revise the Control Limits Table in Article 1030.05(d)(4) of the Standard Specifications to read.

"CONTROL LIMITS					
Parameter	High ESAL Low ESAL Individual Test	High ESAL Low ESAL Moving Avg. of 4	All Other Individual Test	IL-4.75 Individual Test	IL-4.75 Moving Avg. of 4
% Passing: 1/					
1/2 in. (12.5 mm)	± 6 %	± 4 %	± 15 %		
No. 4 (4.75 mm)	± 5 %	± 4 %	± 10 %		
No. 8 (2.36 mm)	± 5 %	± 3 %			
No. 16 (1.18 mm)				± 4 %	± 3 %
No. 30 (600 μm)	± 4 %	± 2.5 %			
Total Dust Content No. 200 (75 μm)	± 1.5 %	± 1.0 %	± 2.5 %	± 1.5 %	± 1.0 %
Asphalt Binder Content	± 0.3 %	± 0.2 %	± 0.5 %	± 0.3 %	± 0.2 %
Voids	± 1.2 %	± 1.0 %	± 1.2 %	± 1.2 %	± 1.0 %
VMA	-0.7 % 2/	-0.5 % 2/		-0.7 % 2/	-0.5 % 2/

1/ Based on washed ignition oven

2/ Allowable limit below minimum design VMA requirement"

2) Design Verification and Production

Description. The following states the requirements for Hamburg Wheel and Tensile Strength testing for High ESAL, IL-4.75, and SMA hot mix asphalt (HMA) mixes during mix design verification and production.

When the options of Warm Mix Asphalt, Reclaimed Asphalt Shingles, or Reclaimed Asphalt Pavement are used by the Contractor, the Hamburg Wheel and tensile strength requirements in this special provision will be superseded by the special provisions for Warm Mix Asphalt, Reclaimed Asphalt Shingles, or Reclaimed Asphalt Pavement as applicable.

Mix Design Testing. Add the following to Article 1030.04 of the Standard Specifications:

"(d) Verification Testing. High ESAL, IL-4.75, and SMA mix designs submitted for verification will be tested to ensure that the resulting mix designs will pass the required criteria for the Hamburg Wheel Test (IL mod AASHTO T-324) and the Tensile Strength Test (IL mod AASHTO T-283). The Department will perform a verification test on gyratory specimens compacted by the Contractor. If the mix fails the Department's verification test, the Contractor shall make the necessary changes to the mix and resubmit compacted specimens to the Department for verification. If the mix fails again, the mix design will be rejected.

All new and renewal mix designs will be required to be tested, prior to submittal for Department verification meeting the following requirements:

(1)Hamburg Wheel Test criteria.

Asphalt Binder Grade	# Repetitions	Max Rut Depth (mm)
PG 76~~0~~ -XX (or higher)	20,000	12.5
PG 64 -XX (or lower)	10,000	12.5

Note: For SMA Designs (N-80) the maximum rut depth is 6.0 mm at 20,000 repetitions. For IL 4.75mm Designs (N-50) the maximum rut depth is 9.0mm at 15,000 repetitions.

(2) Tensile Strength Criteria. The minimum allowable conditioned tensile strength shall be 415 kPa (60 psi) for non-polymer modified performance graded (PG) asphalt binder and 550 kPa (80 psi) for polymer modified PG asphalt binder. The maximum allowable unconditioned tensile strength shall be 1380 kPa (200 psi)."

Production Testing. Add the following to Article 1030.06 of the Standard Specifications:

"(c) Hamburg Wheel Test. All HMA mixtures shall be sampled within the first 500 tons (450 metric tons) on the first day of production or during start up with a split reserved for the Department. The mix sample shall be tested according to the Illinois Modified AASHTO T 324 and shall meet the requirements specified herein. Mix production shall not exceed 1500 tons (1350 metric tons) or one day's production, whichever comes first, until the testing is completed and the mixture is found to be in conformance. The requirement to cease mix production may be waived if the plant produced mixture demonstrates conformance prior to start of mix production for a contract.
The Department may conduct additional Hamburg Wheel Tests on production material as determined by the Engineer. If the mixture fails to meet the Hamburg Wheel criteria, no further mixture will be accepted until the Contractor takes such action as is necessary to furnish a mixture meeting the criteria"

Basis of Payment. Revise the seventh paragraph of Article 406.14 of the Standard Specifications to read:

"For all mixes designed and verified under the Hamburg Wheel criteria, the cost of furnishing and introducing anti-stripping additives in the HMA will not be paid for separately, but shall be considered as included in the contract unit price of the HMA item involved.

No additional compensation will be awarded to the Contractor because of reduced production rates associated with the addition of the anti-stripping additive."

RECLAIMED ASPHALT PAVEMENT AND RECLAIMED ASPHALT SHINGLES (D-1)

Effective: November 1, 2012
Revise: January 2, 2013

Revise Section 1031 of the Standard Specifications to read:

"SECTION 1031. RECLAIMED ASPHALT PAVEMENT AND RECLAIMED ASPHALT SHINGLES

1031.01 Description. Reclaimed asphalt pavement and reclaimed asphalt shingles shall be according to the following.

(a) Reclaimed Asphalt Pavement (RAP). RAP is the material resulting by cold milling or crushing an existing hot-mix asphalt (HMA) pavement. RAP will be considered processed FRAP after completion of both crushing and screening to size. The Contractor shall supply written documentation that the RAP originated from routes or airfields under federal, state, or local agency jurisdiction.

(b) Reclaimed Asphalt Shingles (RAS). Reclaimed asphalt shingles (RAS). RAS is from the processing and grinding of preconsumer or post-consumer shingles. RAS shall be a clean and uniform material with a maximum of 0.5 percent unacceptable material, as defined in Bureau of Materials and Physical Research Policy Memorandum "Reclaimed Asphalt Shingle (RAS) Sources", by weight of RAS. All RAS used shall come from a Bureau of Materials and Physical Research approved processing facility where it shall be ground and processed to 100 percent passing the 3/8 in. (9.5 mm) sieve and 90 percent passing the #4 (4.75 mm) sieve . RAS shall meet the testing requirements specified herein. In addition, RAS shall meet the following Type 1 or Type 2 requirements.

(1) Type 1. Type 1 RAS shall be processed, preconsumer asphalt shingles salvaged from the manufacture of residential asphalt roofing shingles.

(2) Type 2. Type 2 RAS shall be processed post-consumer shingles only, salvaged from residential, or four unit or less dwellings not subject to the National Emission Standards for Hazardous Air Pollutants (NESHAP).

1031.02 Stockpiles. RAP and RAS stockpiles shall be according to the following.

(a) RAP Stockpiles. The Contractor shall construct individual, sealed RAP stockpiles meeting one of the following definitions. No additional RAP shall be added to the pile after the pile has been sealed. Stockpiles shall be sufficiently separated to prevent intermingling at the base. All stockpiles (including unprocessed RAP and Processed FRAP) shall be identified by signs indicating the type as listed below (i.e. "Non- Quality, FRAP -#4 or Type 2 RAS", etc...).

(1) Fractionated RAP (FRAP). FRAP shall consist of RAP from Class I, Superpave HMA (High and Low ESAL) or equivalent mixtures. The coarse aggregate in FRAP shall be crushed aggregate and may represent more than one aggregate type and/or quality but shall be at least C quality. All FRAP shall be processed prior to testing sized into fractions with the separation occurring on or between the #4 (4.75 mm) and 1/2 in. (12.5 mm) sieves. Agglomerations shall be minimized such that 100 percent of the RAP in the coarse fraction shall pass the maximum sieve size specified for the mix the RAP will be used in.

(2) Restricted FRAP (B quality) stockpiles shall consist of RAP from Class I, Superpave (High ESAL), or HMA (High ESAL). If approved by the Engineer, the aggregate from a maximum 3.0 inch single combined pass of surface/binder milling will be classified as B quality. All millings from this application will be processed into FRAP as described previously.

(3) Conglomerate. Conglomerate RAP stockpiles shall consist of RAP from Class I, Superpave HMA (High and Low ESAL) or equivalent mixtures. The coarse aggregate in this RAP shall be crushed aggregate and may represent more than one aggregate type and/or quality but shall be at least C quality. This RAP may have an inconsistent gradation and/or asphalt binder content prior to processing. All conglomerate RAP shall be processed (FRAP) prior to testing. Conglomerate RAP stockpiles shall not contain steel slag or other expansive material as determined by the Department.

(4) Conglomerate "D" Quality (DQ). Conglomerate DQ RAP stockpiles shall consist of RAP from HMA shoulders, bituminous stabilized subbases or Superpave (Low ESAL)/HMA (Low ESAL) IL-19.0L binder mixture. The coarse aggregate in this RAP may be crushed or round but shall be at least D quality. This RAP may have an inconsistent gradation and/or asphalt binder content. Conglomerate DQ RAP stockpiles shall not contain steel slag or other expansive material as determined by the Department.

(5) Non-Quality. RAP stockpiles that do not meet the requirements of the stockpile categories listed above shall be classified as "Non-Quality".

RAP/FRAP containing contaminants, such as earth, brick, sand, concrete, sheet asphalt, bituminous surface treatment (i.e. chip seal), pavement fabric, joint sealants, plant cleanout etc., will be unacceptable unless the contaminants are removed to the satisfaction of the Engineer. Sheet asphalt shall be stockpiled separately.

(b) RAS Stockpiles. The Contractor shall construct individual, sealed RAS stockpiles meeting one of the following definitions. No additional RAS shall be added to the pile after the pile has been sealed. Type 1 and Type 2 RAS shall be stockpiled separately and shall be sufficiently separated to prevent intermingling at the base. Each stockpile shall be signed indicating what type of RAS is present.

However, a RAS source may submit a written request to the Department for approval to blend mechanically a specified ratio of type 1 RAS with type 2 RAS. The source will not be permitted to change the ratio of the blend without the Department prior written approval. The Engineer's written approval will be required, to mechanically blend RAS with any fine aggregate produced under the AGCS, up to an equal weight of RAS, to improve workability. The fine aggregate shall be "B Quality" or better from an approved Aggregate Gradation Control System source. The fine aggregate shall be one that is approved for use in the HMA mixture and accounted for in the mix design and during HMA production.

Records identifying the shingle processing facility supplying the RAS, RAS type and lot number shall be maintained by project contract number and kept for a minimum of three years.

1031.03 Testing. RAP/FRAP and RAS testing shall be according to the following.

(a) RAP/FRAP Testing. When used in HMA, the RAP/FRAP shall be sampled and tested either during processing or after stockpiling.

(1) During Stockpiling. For testing during stockpiling, washed extraction samples shall be run at the minimum frequency of one sample per 500 tons (450 metric tons) for the first 2000 tons (1800 metric tons) and one sample per 2000 tons (1800 metric tons) thereafter. A minimum of five tests shall be required for stockpiles less than 4000 tons (3600 metric tons).

(2) After Stockpiling. For testing after stockpiling, the Contractor shall submit a plan for approval to the District proposing a satisfactory method of sampling and testing the RAP/FRAP pile either in-situ or by restockpiling. The sampling plan shall meet the minimum frequency required above and detail the procedure used to obtain representative samples throughout the pile for testing.

Before extraction, each field sample whether RAP or FRAP, shall be split to obtain two samples of test sample size. One of the two test samples from the final split shall be labeled and stored for Department use. The Contractor shall extract the other test sample according to Department procedure. The Engineer reserves the right to test any sample (split or Department-taken) to verify Contractor test results.

(b) RAS Testing. RAS shall be sampled and tested either during or after stockpiling.

During stockpiling, washed extraction, and testing for unacceptable materials shall be run at the minimum frequency of one sample per 200 tons (180 metric tons) for the first 1000 tons (900 metric tons) and one sample per 1000 tons (900 metric tons) thereafter. A minimum of five samples are required for stockpiles less than 1000 tons (900 metric tons). Once a ≤ 1000 ton (900 metric ton), five-sample/test stockpile has been established it shall be sealed. Additional incoming RAS shall be stockpiled in a separate working pile as designated in the Quality Control plan and only added to the

sealed stockpile when the test results of the working pile are complete and are found to meet the tolerances specified herein for the original sealed RAS stockpile.

Before extraction, each field sample shall be split to obtain two samples of test sample size. One of the two test samples from the final split shall be labeled and stored for Department use. The Contractor shall extract the other test sample according to Department procedures. The Engineer reserves the right to test any sample (split or Department-taken) to verify Contractor test results.

1031.04 Evaluation of Tests. Evaluation of tests results shall be according to the following.

(a) Evaluation of RAP/FRAP Test Results. All of the extraction results shall be compiled and averaged for asphalt binder content and gradation and, when applicable (for slag) G_{mm}. Individual extraction test results, when compared to the averages, will be accepted if within the tolerances listed below.

Parameter	RAP or FRAP	Conglomerate "D" Quality RAP
1 in. (25 mm)		± 5 %
1/2 in. (12.5 mm)	± 8 %	± 15 %
No. 4 (4.75 mm)	± 6 %	± 13 %
No. 8 (2.36 mm)	± 5 %	
No. 16 (1.18 mm)		± 15 %
No. 30 (600 μm)	± 5 %	
No. 200 (75 μm)	± 2.0 %	± 4.0 %
Asphalt Binder	± 0.4 % 1/	± 0.5 %
G_{mm}	± 0.03 2/	

1/ The tolerance for FRAP shall be ± 0.3 %.
2/ For slag and steel slag

If more than 20 percent of the individual sieves and/or asphalt binder content tests are out of the above tolerances, the RAP/FRAP shall not be used in HMA unless the RAP/FRAP representing the failing tests is removed from the stockpile. All test data and acceptance ranges shall be sent to the District for evaluation.

With the approval of the Engineer, the ignition oven may be substituted for extractions according to the Illinois Test Procedure, "Calibration of the Ignition Oven for the Purpose of Characterizing Reclaimed Asphalt Pavement (RAP)".

(b) Evaluation of RAS Test Results. All of the test results, with the exception of percent unacceptable materials, shall be compiled and averaged for asphalt binder content and

gradation. Individual test results, when compared to the averages, will be accepted if within the tolerances listed below.

Parameter	RAS
No. 8 (2.36 mm)	± 5 %
No. 16 (1.18 mm)	± 5 %
No. 30 (600 µm)	± 4 %
No. 200 (75 µm)	± 2.0 %
Asphalt Binder Content	± 1.5 %

If more than 20 percent of the individual sieves and/or asphalt binder content tests are out of the above tolerances, the RAS shall not be used in Department projects unless the RAS, RAP or FRAP representing the failing tests is removed from the stockpile. All test data and acceptance ranges shall be sent to the District for evaluation.

1031.05 Quality Designation of Aggregate in RAP/FRAP.

(a) RAP. The aggregate quality of the RAP for homogenous, conglomerate, and conglomerate "D" quality stockpiles shall be set by the lowest quality of coarse aggregate in the RAP stockpile and are designated as follows.

(1) RAP from Class I, Superpave (High ESAL)/HMA (High ESAL), or (Low ESAL) IL-9.5L surface mixtures are designated as containing Class B quality coarse aggregate.

(2) RAP from Superpave (High ESAL)/HMA (Low ESAL) IL-19.0L binder mixture is designated as Class D quality coarse aggregate.

(3) RAP from Class I, Superpave (High ESAL)/HMA (High ESAL) binder mixtures, bituminous base course mixtures, and bituminous base course widening mixtures are designated as containing Class C quality coarse aggregate.

(4) RAP from bituminous stabilized subbase and BAM shoulders are designated as containing Class D quality coarse aggregate.

(b) FRAP. If the Engineer has documentation of the quality of the FRAP aggregate, the Contractor shall use the assigned quality provided by the Engineer.

If the quality is not known, the quality shall be determined as follows. Fractionated RAP stockpiles containing plus #4 (4.75 mm) sieve coarse aggregate shall have a maximum tonnage of 5,000 tons (4,500 metric tons). The Contractor shall obtain a representative sample witnessed by the Engineer. The sample shall be a minimum of 50 lb (25 kg). The sample shall be extracted according to Illinois Modified AASHTO T 164 by a consultant prequalified by the Department for the specified testing. The consultant shall submit the test results along with the recovered aggregate to the District Office. The cost for this testing shall be paid by the Contractor. The District will forward the sample

to the BMPR Aggregate Lab for MicroDeval Testing, according to Illinois Modified AASHTO T 327. A maximum loss of 15.0 percent will be applied for all HMA applications. The fine aggregate portion of the fractionated RAP shall not be used in any HMA mixtures that require a minimum of "B" quality aggregate or better, until the coarse aggregate fraction has been determined to be acceptable thru a MicroDeval Testing.

1031.06 Use of RAS, RAP or FRAP in HMA. The use of RAS, RAP or FRAP shall be a Contractor's option when constructing HMA in all contracts.

(a) RAP/FRAP. The use of RAP/FRAP in HMA shall be as follows.

(1) Coarse Aggregate Size (after extraction). The coarse aggregate in all RAP shall be equal to or less than the nominal maximum size requirement for the HMA mixture to be produced.

(2) Steel Slag Stockpiles. RAP/FRAP stockpiles containing steel slag or other expansive material, as determined by the Department, shall be homogeneous and will be approved for use in HMA (High ESAL and Low ESAL) mixtures regardless of lift or mix type.

(3) Use in HMA Surface Mixtures (High and Low ESAL). RAP/FRAP stockpiles for use in HMA surface mixtures (High and Low ESAL) shall have coarse aggregate that is Class B quality or better. RAP/FRAP shall be considered equivalent to limestone for frictional considerations unless produced/screened to minus 3/8 inch.

(4) Use in HMA Binder Mixtures (High and Low ESAL), HMA Base Course, and HMA Base Course Widening. RAP/FRAP stockpiles for use in HMA binder mixtures (High and Low ESAL), HMA base course, and HMA base course widening shall be FRAP in which the coarse aggregate is Class C quality or better.

(5) Use in Shoulders and Subbase. RAP/FRAP stockpiles for use in HMA shoulders and stabilized subbase (HMA) shall be RAP, Restricted FRAP, conglomerate, or conglomerate DQ.

(b) RAS. RAS meeting Type 1 or Type 2 requirements will be permitted in all HMA applications as specified herein.

(c) RAP/FRAP and/or RAS Usage Limits. Type 1 or Type 2 RAS may be used alone or in conjunction with RAP or FRAP in HMA mixtures up to a maximum of 5.0% by weight of the total mix.

When the Contractor chooses the RAP option, the percentage of the percentage of virgin asphalt binder replaced by the asphalt binder from the RAP shall not exceed the percentages indicated in the table below for a given N Design:

Max Asphalt Binder Replacement RAP Only
Table 1

HMA Mixtures [1/, 2/]	Maximum % Asphalt Binder replacement (ABR)		
Ndesign	Binder/Leveling Binder	Surface	Polymer Modified
30L	25	15	10
50	25	15	10
70	15	10	10
90	10	10	10
105	10	10	10
4.75 mm N-50			15
SMA N-80			10

1/ For HMA "All Other" (shoulder and stabilized subbase) N-30, the percent asphalt binder replacement shall not exceed 50% of the total asphalt binder in the mixture.

2/ When the asphalt binder replacement exceeds 15 percent, the high and low virgin asphalt binder grades shall each be reduced by one grade (i.e. 25 percent binder replacement would require a virgin asphalt binder grade of PG64-22 to be reduced to a PG58-28). When constructing full depth HMA and the ABR is less than 15 percent, the required virgin asphalt binder grade shall be PG64-28.

When the Contractor chooses either the RAS or FRAP option, the percent binder replacement shall not exceed the amounts indicated in the tables below for a given N Design.

Max Asphalt Binder Replacement RAS or FRAP
Table 2

HMA Mixtures [1/, 2/]	Maximum % ABR		
Ndesign	Binder/Leveling Binder	Surface	Polymer [3/, 4/] Modified
30L	35	30	15
50	30	25	15
70	30	20	15
90	20	15	15
105	20	15	15
4.75 mm N-50			25
SMA N-80			15

1/ For HMA "All Other" (shoulder and stabilized subbase) N-30, the percent asphalt bider replacement shall not exceed 50% of the total asphalt binder in the mixture.

2/ When the asphalt binder replacement exceeds 15 percent for all mixes, except for SMA and IL-4.75, the high and low virgin asphalt binder grades shall each be reduced by one grade (i.e. 25 percent binder replacement will require a virgin asphalt binder grade of PG64-22 to be reduced to a PG58-28). When constructing full depth HMA and the ABR is less than 15 percent, the required virgin asphalt binder grade shall be PG64-28.

3/ When the ABR for SMA is 15 percent or less, the required virgin asphalt binder grade shall be SBS PG76-22.

4/ When the ABR for IL-4.75 mix is 15 percent or less, the required virgin asphalt binder grade shall be SBS PG76-22. When the ABR for the IL-4.75 mix exceeds 15 percent, the virgin asphalt binder grade shall be SBS PG70-28.

When the Contractor chooses the RAS with FRAP combination, the percent asphalt binder replacement shall split equally between the RAS and the FRAP, and the total replacement shall not exceed the amounts indicated in the tables below for a given N Design.

Max Asphalt Binder Replacement RAS and FRAP Combination
Table 3

HMA Mixtures [1/, 2/]	Maximum % ABR		
Ndesign	Binder/Leveling Binder	Surface	Polymer Modified [3/, 4/]
30L	50	40	30
50	40	35	30
70	40	30	30
90	40	30	30
105	40	30	30
4.75 mm N-50			40
SMA N-80			30

1/ For HMA "All Other" (shoulder and stabilized subbase) N-30, the percent asphalt binder replacement shall not exceed 50% of the total asphalt binder in the mixture.

2/ When the binder replacement exceeds 15 percent for all mixes, except for SMA and IL-4.75, the high and low virgin asphalt binder grades shall each be reduced by one grade (i.e. 25 percent binder replacement will require a virgin asphalt binder grade of PG64-22 to be reduced to a PG58-28).

3/ When the ABR for SMA is 15 percent or less, the required virgin asphalt binder shall be SBS PG76-22. When the ABR for SMA exceeds 15%, the virgin asphalt binder grade shall be SBS PG70-28.

4/ When the ABR for IL-4.75 mix is 15 percent or less, the required virgin asphalt binder grade shall be SBS PG76-22. When the ABR for the IL-4.75 mix exceeds 15 percent, the virgin asphalt binder grade shall be SBS PG70-28.

1031.07 HMA Mix Designs. At the Contractor's option, HMA mixtures may be constructed utilizing RAP/FRAP and/or RAS material meeting the above detailed requirements.

All HMA mixtures will be required to be tested, prior to submittal for Department verification, according to Illinois Modified AASHTO T324 (Hamburg Wheel) and shall meet the following requirements:

Asphalt Binder Grade	# Repetitions	Max Rut Depth (mm)
PG76-XX	20,000	12.5
PG70-XX	20,000	12.5
PG64-XX	10,000	12.5
PG58-XX	10,000	12.5
PG52-XX	10,000	12.5
PG46-XX	10,000	12.5

Note: For SMA Designs (N-80) the maximum rut depth is 6.0 mm at 20,000 repetitions.
For IL 4.75 mm Designs (N-50) the maximum rut depth is 9.0 mm at 15,000 repetitions.

1031.08 HMA Production. All HMA mixtures shall be sampled within the first 500 tons (450 metric tons) on the first day of production or during start up with a split reserved for the Department. The mix sample shall be tested according to the Illinois Modified AASHTO T 324 and shall meet the requirements specified herein. Mix production shall not exceed 1500 tons (1350 metric tons) or one day's production, whichever comes first, until the testing is completed and the mixture is found to be in conformance. The requirement to cease mix production may be waived if the plant produced mixture demonstrates conformance prior to start of mix production for a contract.

To remove or reduce agglomerated material, a scalping screen, gator, crushing unit, or comparable sizing device approved by the Engineer shall be used in the RAS, RAP and FRAP feed system to remove or reduce oversized material. If material passing the sizing device adversely affects the mix production or quality of the mix, the sizing device shall be set at a size specified by the Engineer.

If the RAS, RAP and FRAP control tolerances or QC/QA test results require corrective action, the Contractor shall cease production of the mixture containing RAS, RAP or FRAP and either switch to the virgin aggregate design or submit a new RAS, RAP or FRAP design.

(a) RAP/FRAP. The coarse aggregate in all RAP/FRAP used shall be equal to or less than the maximum size requirement for the HMA mixture being produced.

(b) RAS. RAS shall be incorporated into the HMA mixture either by a separate weight depletion system or by using the RAP weigh belt. Either feed system shall be interlocked with the aggregate feed or weigh system to maintain correct proportions for all rates of production and batch sizes. The portion of RAS shall be controlled accurately to within ± 0.5 percent of the amount of RAS utilized. When using the weight depletion system, flow indicators or sensing devices shall be provided and interlocked with the plant controls such that the mixture production is halted when RAS flow is interrupted.

(c) RAS, RAP and FRAP. HMA plants utilizing RAS, RAP and FRAP shall be capable of automatically recording and printing the following information.

(1) Dryer Drum Plants.

a. Date, month, year, and time to the nearest minute for each print.

b. HMA mix number assigned by the Department.

c. Accumulated weight of dry aggregate (combined or individual) in tons (metric tons) to the nearest 0.1 ton (0.1 metric ton).

d. Accumulated dry weight of RAS, RAP and FRAP in tons (metric tons) to the nearest 0.1 ton (0.1 metric ton).

e. Accumulated mineral filler in revolutions, tons (metric tons), etc. to the nearest 0.1 unit.

f. Accumulated asphalt binder in gallons (liters), tons (metric tons), etc. to the nearest 0.1 unit.

g. Residual asphalt binder in the RAS, RAP and FRAP material as a percent of the total mix to the nearest 0.1 percent.

h. Aggregate RAS, RAP and FRAP moisture compensators in percent as set on the control panel. (Required when accumulated or individual aggregate and RAS, RAP and FRAP are printed in wet condition.)

i. When producing mixtures with FRAP and/or RAS, a positive dust control system shall be utilized.

j. Accumulated mixture tonnage.

k. Dust Removed (accumulated to the nearest 0.1 ton)

(2) Batch Plants.

a. Date, month, year, and time to the nearest minute for each print.

b. HMA mix number assigned by the Department.

c. Individual virgin aggregate hot bin batch weights to the nearest pound (kilogram).

d. Mineral filler weight to the nearest pound (kilogram).

f. RAS, RAP and FRAP weight to the nearest pound (kilogram).

g. Virgin asphalt binder weight to the nearest pound (kilogram).

h. Residual asphalt binder in the RAS, RAP and FRAP material as a percent of the total mix to the nearest 0.1 percent.

The printouts shall be maintained in a file at the plant for a minimum of one year or as directed by the Engineer and shall be made available upon request. The printing system will be inspected by the Engineer prior to production and verified at the beginning of each construction season thereafter.

1031.09 RAP in Aggregate Surface Course and Aggregate Shoulders. The use of RAP or FRAP in aggregate surface course and aggregate shoulders shall be as follows.

(a) Stockpiles and Testing. RAP stockpiles may be any of those listed in Article 1031.02, except "Non-Quality" and "FRAP". The testing requirements of Article 1031.03 shall not apply.

(b) Gradation. One hundred percent of the RAP material shall pass the 1 1/2 in. (37.5mm) sieve. The RAP material shall be reasonably well graded from coarse to fine. RAP material that is gap-graded, FRAP, or single sized will not be accepted for use as Aggregate Surface Course and Aggregate Shoulders."

FINE AGGREGATE FOR HOT- MIX ASPHALT (HMA) (D-1)
Effective: May 1, 2007
Revised: January 1, 2012

Revise Article 1003.03 (c) of the Standard Specifications to read:

"(c) Gradation. The fine aggregate gradation for all HMA shall be FA1, FA 2, FA 20, FA 21 or FA 22. When Reclaimed Asphalt Pavement (RAP) is incorporated in the HMA design, the use of FA 21 Gradation will not be permitted.

HOT MIX ASPHALT MIXTURE IL-4.75 (DIST 1)
Effective: January 1, 2007
Revised: January 1, 2013

Description. This work shall consist of constructing Hot-Mix Asphalt (HMA) surface course or leveling binder with an IL-4.75 mixture. Work shall be according to Sections 406, 1030, 1031 and 1032 of the Standard Specifications except as modified herein.

Materials.

Revise Article 1030.02 of the Standard Specifications to read:

(b)Fine aggregate (Note 1 and 3)

Note 3. The gradation for IL-4.75 shall be FA 1, FA 2, FA 20 or FA 22.

(c) Reclaimed or recycled material. Only processed FRAP or RAS will be permitted in the 4.75 mm mix. Refer to D1 version for Use of Recycle Materials specification(s).

(d) Mineral Filler. Mineral filler shall conform to the requirements of Article 1011.01 of the Standard Specifications. Collected HMA baghouse dust may be used as Mineral Filler provided it meets the gradation outlined in Article 1011 of the Standard Specifications and a separate mix design is created.

(g) Asphalt Binder (AB). The AB shall be either Elvaloy or SBS/SBR with a PG 76-22 value. The AB shall meet the requirements of Article 1032.05(b) of the Standard Specifications; however the elastic recovery of the AB shall be 80 minimum.

The AB shall be shipped, maintained, and stored at the mix plant according to the manufacturer's requirements. It shall be placed in an empty tank and not blended with other asphalt cements.

Mixture Design. Add the following to Article 1030.04(b) of the Standard Specifications

"(4) IL 4.75 Mixture.

Volumetric Parameter	Requirement
Design Air Voids	3.5% at Ndesign 50
Voids in the Mineral Aggregate (VMA)	18.5% minimum
Voids Filled with Asphalt (VFA)	72 - 85%
Dust/AC Ratio	1.0
Density (% of Max Specific Gravity)	93.0 - 97.4
Maximum Drain-down	0.3%

The percentage of new natural sand shall not exceed 25% if FRAP or RAS is used. For designs without FRAP or RAS the sand fraction of the final blend shall be at least 50% manufacture stone sand.

Mixture Production. Plant modifications may be required to accommodate the addition of higher percentages of mineral filler as required by the JMF.

During production, mineral filler shall not be stored in the same silo as collected dust. This may require any previously collected bag house dust in a storage silo prior to production of the IL-4.75 mixture to be wasted. Only metered bag house dust may be returned back directly to the mix. Any additional minus No. 200 (75 μm) material needed to produce the IL-4.75 shall be mineral filler.

As an option, collected bag-house dust may be used in lieu of manufactured mineral filler, provided; 1) there is enough is available for the production of the IL-4.75 mix for the entire project and 2) a mix design was prepared with collected bag-house dust.

The mixture shall be produced within the temperature range recommended by the asphalt cement producer; but not less than 325 °F (165 °C).

The amount of moisture remaining in the finished mixture (at silo discharge) shall be less than 0.3 percent based on the weight of the test sample after drying.

Mixtures contain steel slag sand or aggregate having absorptions ≥ 2.5 percent shall have a silo storage plus haul time of not less than 1.5 hours.

Placement

Revise Article 406.06 (b) (2) a. to read as follows:

> The surface shall be dry for at least 12 hours, and clean, prior to placement of the mixture.
>
> As an option, the contractor will be allowed to use a heated drier, at no additional cost to the Department, to expedite the drying of the pavement. No mix will be placed in areas of standing water or areas that show evidence of moisture or dampness. The use of a heated drier will be stopped if the pavement shows signs of damaged.

Control Charts/Limits.

Add the following to Control Limits table in Article 1030.04(d)(4) of the Standard Specifications:

Parameter	Individual Test	Moving Average
% Passing		
No. 16 (1.18 mm)	± 4%	± 3%
No. 200 (75 μm)	± 1.5%	± 1.0%
Asphalt Binder Content	± 0.3%	± 0.2%
Air Voids	± 1.2% (of design)	± 1.0% (of design)
No. 200 (75 μm)	± 1.5%	± 1.0%

BITUMINOUS MATERIALS COST ADJUSTMENTS (BDE) (RETURN FORM WITH BID)

Effective: November 2, 2006
Revised: August 1, 2013

Description. Bituminous material cost adjustments will be made to provide additional compensation to the Contractor, or credit to the Department, for fluctuations in the cost of bituminous materials when optioned by the Contractor. The adjustments shall apply to permanent and temporary hot-mix asphalt (HMA) mixtures, bituminous surface treatments (cover and seal coats), and preventative maintenance type surface treatments. The adjustments shall not apply to bituminous prime coats, tack coats, crack filling/sealing, or joint filling/sealing.

The bidder shall indicate on the attached form whether or not this special provision will be part of the contract and submit the completed form with his/her bid. Failure to submit the form, or failure to fill out the form completely, shall make this contract exempt of bituminous materials cost adjustments.

Method of Adjustment. Bituminous materials cost adjustments will be computed as follows.

$CA = (BPI_P - BPI_L) \times (\%AC_V / 100) \times Q$

Where: CA = Cost Adjustment, $.
BPI_P = Bituminous Price Index, as published by the Department for the month the work is performed, $/ton ($/metric ton).
BPI_L = Bituminous Price Index, as published by the Department for the month prior to the letting, $/ton ($/metric ton).
$\%AC_V$ = Percent of virgin Asphalt Cement in the Quantity being adjusted. For HMA mixtures, the % AC_V will be determined from the adjusted job mix formula. For bituminous materials applied, a performance graded or cutback asphalt will be considered to be 100% AC_V and undiluted emulsified asphalt will be considered to be 65% AC_V.
Q = Authorized construction Quantity, tons (metric tons) (see below).

For HMA mixtures measured in square yards: Q, tons = A x D x (G_{mb} x 46.8) / 2000. For HMA mixtures measured in square meters: Q, metric tons = A x D x (G_{mb} x 1) / 1000. When computing adjustments for full-depth HMA pavement, separate calculations will be made for the binder and surface courses to account for their different G_{mb} and % AC_V.

For bituminous materials measured in gallons: Q, tons = V x 8.33 lb/gal x SG / 2000
For bituminous materials measured in liters: Q, metric tons = V x 1.0 kg/L x SG / 1000

Where: A = Area of the HMA mixture, sq yd (sq m).
D = Depth of the HMA mixture, in. (mm).
G_{mb} = Average bulk specific gravity of the mixture, from the approved mix design.
V = Volume of the bituminous material, gal (L).

SG = Specific Gravity of bituminous material as shown on the bill of lading.

Basis of Payment. Bituminous materials cost adjustments may be positive or negative but will only be made when there is a difference between the BPI_L and BPI_P in excess of five percent, as calculated by:

Percent Difference = $\{(BPI_L - BPI_P) \div BPI_L\} \times 100$

Bituminous materials cost adjustments will be calculated for each calendar month in which applicable bituminous material is placed; and will be paid or deducted when all other contract requirements for the work placed during the month are satisfied. The adjustments shall not apply during contract time subject to liquidated damages for completion of the entire contract.

Return With Bid

ILLINOIS DEPARTMENT OF TRANSPORTATION

OPTION FOR BITUMINOUS MATERIALS COST ADJUSTMENTS

The bidder shall submit this completed form with his/her bid. Failure to submit the form, or failure to fill out the form completely, shall make this contract exempt of bituminous materials cost adjustments. After award, this form, when submitted, shall become part of the contract.

Contract No.: 1428-13429

Company Name: D. Construction, Inc.

Contractor's Option:

Is your company opting to include this special provision as part of the contract?

Yes ☐ No ☑

Signature: _____ **Date:** 4/23/14

80173

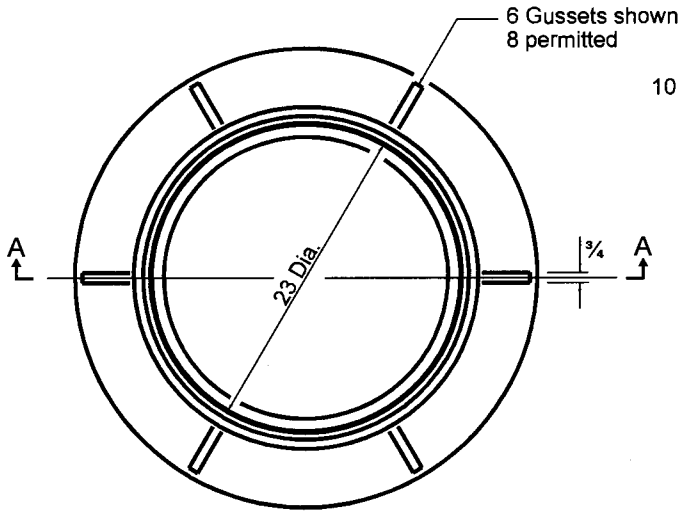

CAST FRAME

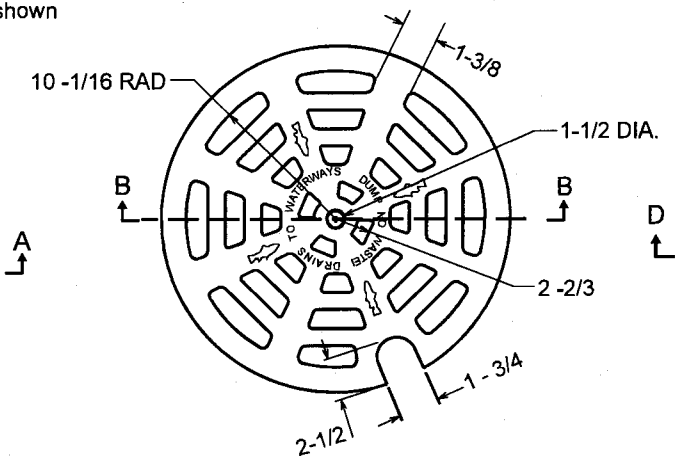

CAST OPEN LID
Gray Iron Lid

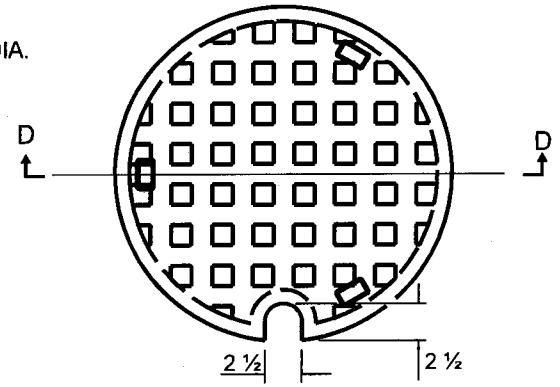

CAST CLOSED LID
Gray Iron Lid

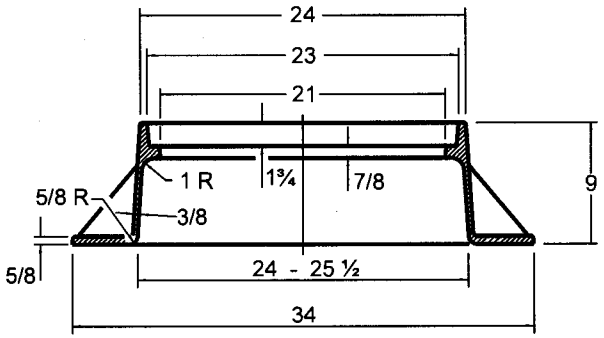

SECTION A-A
Gray Iron

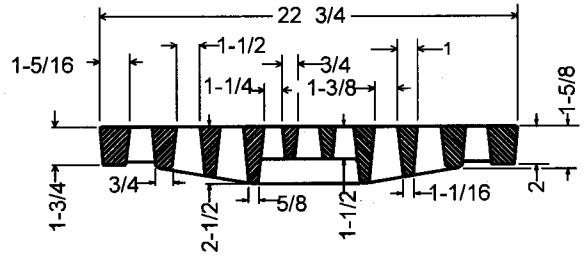

SECTION B-B

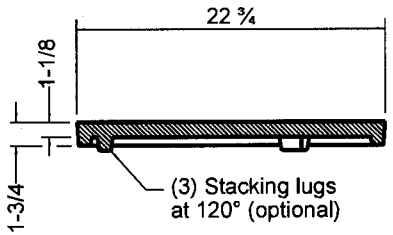

SECTION D-D

GENERAL NOTES

This Standard conforms to IDOT Standard 604001 except for the Cook County requirement for "DRAINS TO WATERWAYS" "DUMP NO WASTE" and trout logo on the Type 1 - Open Lid Flat Grate.

All dimensions are in inches unless otherwise shown.

NOT TO SCALE

REVISION	
DATE	COMMENT
04-06-12 - MK	DRAINS TO WATERWAYS DUMP NO WASTE

STANDARD D-40

COUNTY OF COOK
DEPARTMENT OF TRANSPORTATION & HIGHWAYS

FRAME AND LID
TYPE I
"DUMP NO WASTE - DRAINS TO RIVER"

COMPUTED ____ APPROVED ____
DRAWN ____
CHECKED ____
ROBERT F. MACK, P.E., CFM

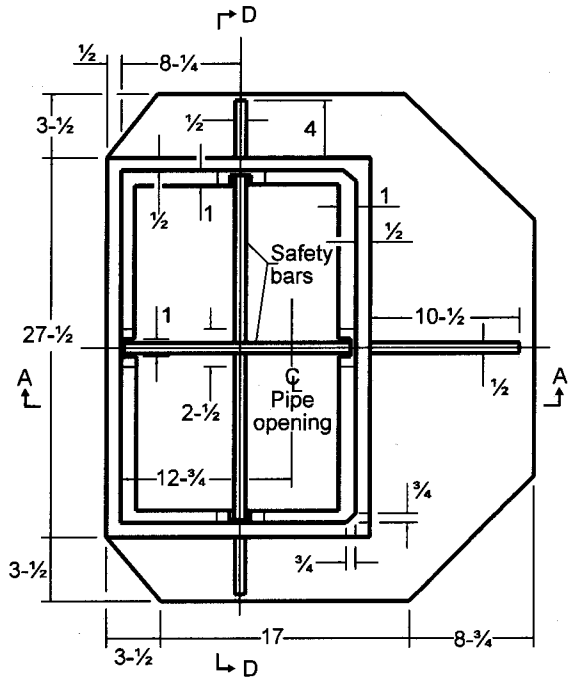

PLAN - FRAME

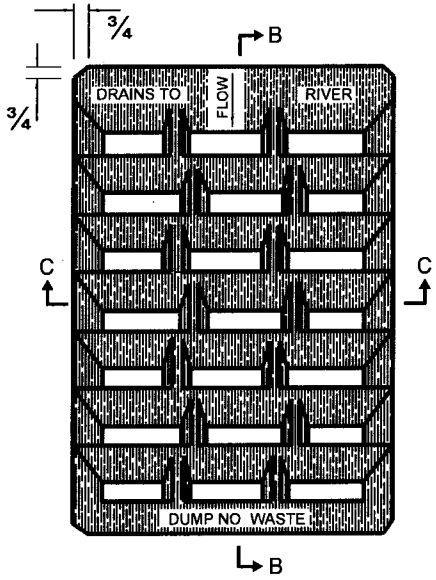

PLAN - GRATE 23V

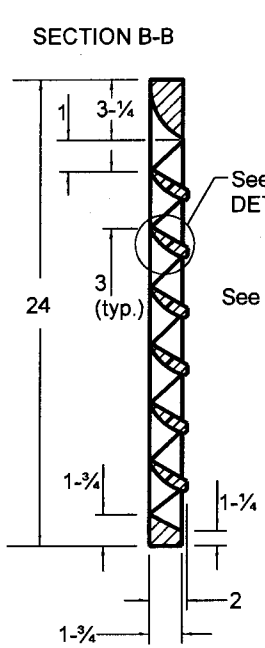

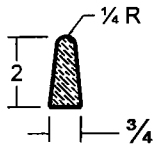

DETAIL A

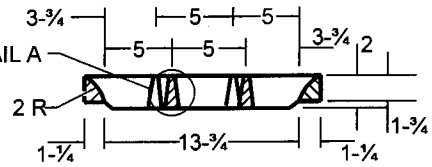

SECTION C-C

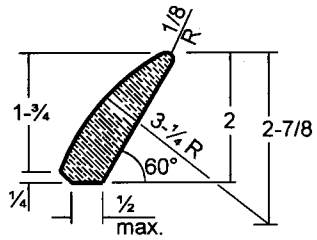

DETAIL B

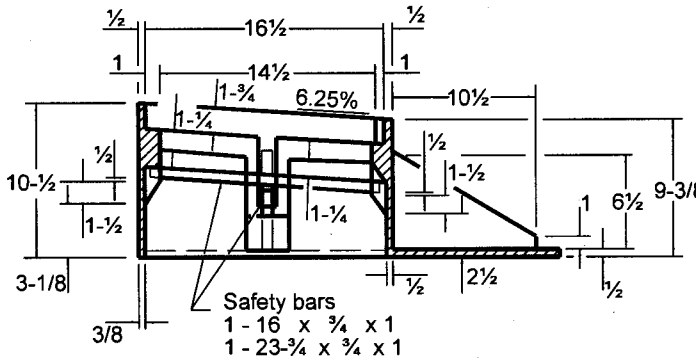

SECTION A-A

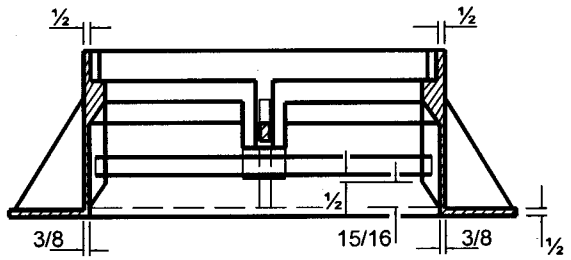

SECTION D-D

GENERAL NOTES

This Standard conforms to IDOT Standard 604086 except for the Cook County requirement for lettering frame with "DRAINS TO RIVER" "DUMP NO WASTE".

All dimensions are in inches unless otherwise shown.

NOT TO SCALE

REVISION	
DATE	COMMENT
01-13-12	INCHES
02-25-10	DRAINS TO RIVER DUMP NO WASTE

STANDARD D-41

COUNTY OF COOK

DEPARTMENT OF TRANSPORTATION & HIGHWAYS

FRAME AND GRATE - TYPE 23V

"DUMP NO WASTE - DRAINS TO RIVER"

COMPUTED

DRAWN

CHECKED

APPROVED FEBRUARY 25, 2010

ROBERT F. MACK, P.E., CFM

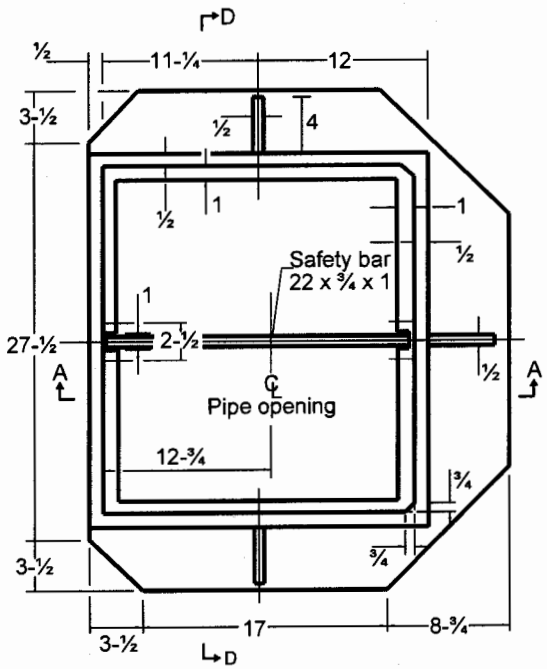

PLAN - FRAME

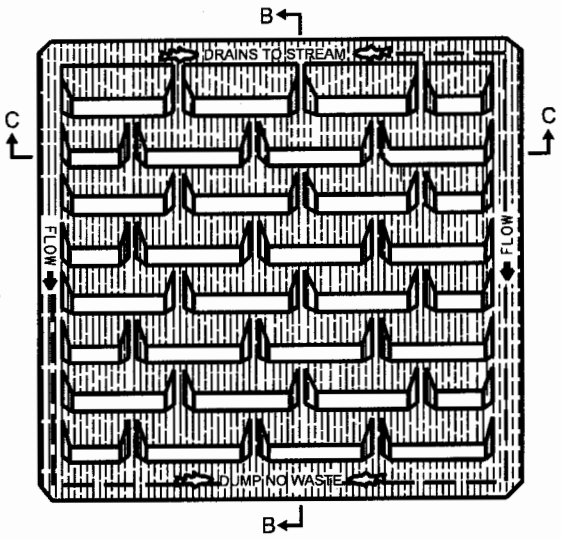

PLAN - GRATE 24V

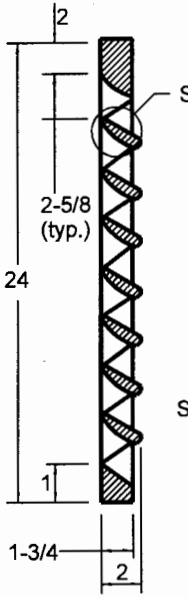

SECTION B-B

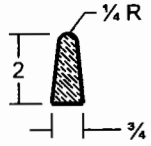

DETAIL A

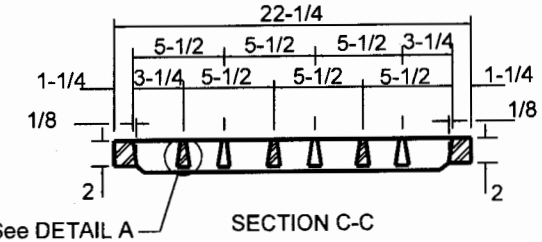

SECTION C-C

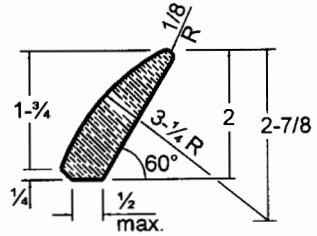

DETAIL B

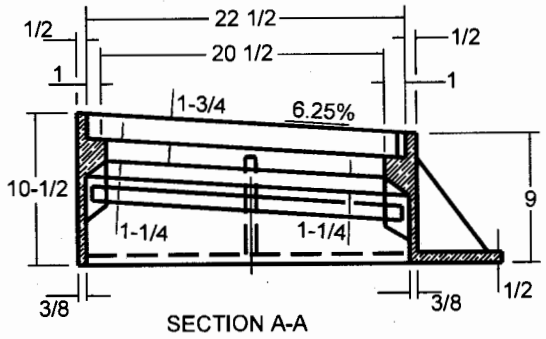

SECTION A-A

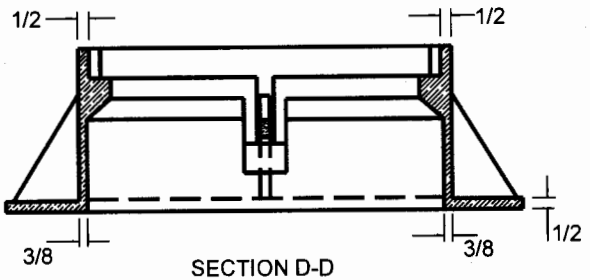

SECTION D-D

GENERAL NOTES

This Standard conforms to IDOT Standard 604091 except for the Cook County requirement for lettering frame with "DRAINS TO STREAM" "DUMP NO WASTE" with trout logo.

All dimensions are in inches unless otherwise shown.

NOT TO SCALE

REVISION	
DATE	COMMENT
01-13-12	INCHES (MILLIMETERS)
02-25-10	DRAINS TO STREAM DUMP NO WASTE

STANDARD D-42

COUNTY OF COOK

DEPARTMENT OF TRANSPORTATION & HIGHWAYS

FRAME AND GRATE-TYPE 24V

"DUMP NO WASTE - DRAINS TO RIVER"

COMPUTED

DRAWN

CHECKED

APPROVED FEBRUARY 25, 2010

ROBERT J. MACK, P.E., CFM

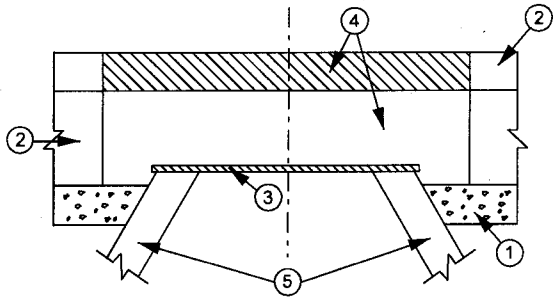

STAGE 1 (BEFORE PAVEMENT MILLING)

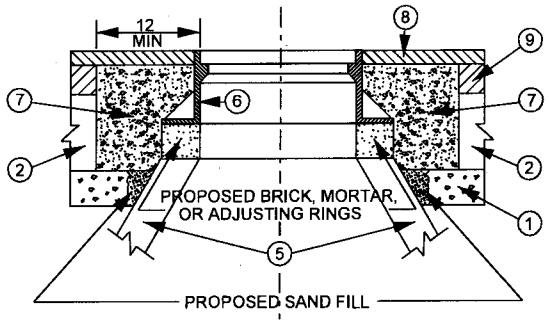

STAGE 2 (AFTER PAVEMENT MILLING)

LEGEND

1. SUB-BASE GRANULAR MATERIAL
2. EXISTING PAVEMENT
3. 36 (900) DIAMETER METAL PLATE
4. PROPOSED CRUSHED STONE AND BITUMINOUS MATERIAL
5. EXISTING STRUCTURE
6. FRAME AND LID (SEE NOTES)
7. CLASS SI CONCRETE, BITUMINOUS CONCRETE SURFACE OR BINDER COURSE MATERIAL
8. PROPOSED BITUMINOUS CONCRETE SURFACE COURSE
9. PROPOSED BITUMINOUS CONCRETE BINDER COURSE

DETAILS FOR FRAMES AND LIDS ADJUSTMENT WITH MILLING

LOCATION OF STRUCTURES:

THE CONTRACTOR WILL BE REQUIRED TO KEEP A RECORD OF THE LOCATIONS OF THE BURIED STRUCTURES ACCORDING TO THE STATION A DNDISTANCE LEFT OR RIGHT OF THE CENTERLINE OF PAVEMENT. UPON COMPLETION OF THE WORK THE CONTACTOR WILL DELIVER THE RECORD TO THE ENGINEER.

BASIS OF PAYMENT:

FRAMES AND LIDS TO BE ADJUSTED, SPECIAL EACH

NEW FRAMES AND LIDS, WHEN SPECIFIED, WILL BE PAID FOR SEPARATELY.

CONSTRUCTION PROCEDURES:

STAGE 1 (BEFORE PAVEMENT MILLING)

A) REMOVE A MINIMUM OF 12 INCHES OF THE PAVEMENT FROM AROUND THE STRUCTURE.

B) REMOVE THE EXISTING FRAME AND LID FROM THE STRUCTURE.

C) COVER THE STRUCTURE OPENING WITH A 36 (900) DIAMETER METAL PLATE.

D) BACKFILL WITH CRUSHED STONE AND A MINIMUM 1-½ INCH THICK BITUMINOUS MATERIAL APPROVED BY THE ENGINEER.

STAGE 2 (AFTER PAVEMENT MILLING)

A) REMOVE THE BITUMINOUS MATERIAL AND CRUSHED STONE.

B) INSTALL THE FRAME AND LID; ADJUST THE FRAME TO ITS FINAL SURFACE ELEVATION.

C) THE SURROUNDING SPACE SHALL BE FILLED WITH CLASS SI CONCRETE OR BITUMINOUS CONCRETE SURFACE OR BINDER COURSE MATERIAL TO THE ELEVATION OF THE SURFACE PF THE EXISTING BASE COURSE OR THE BINDER COURSE.

NOTES

1. THIS STANDARD CONFORMS TO THE IDOT BUREAU OF DESIGN SPECIFICATION FOR FRAMES AND LIDS TO BE ADJUSTED (SPECIAL).
2. EXISTING BROKEN FRAMES AND LIDS SHALL BE REMOVED AND DISPOSED OF BY THE CONTRACTOR AND SHALL BE REPLACED AS DIRECTED BY THE ENGINEER. REPLACEMENT FRAMES AND LIDS WILL BE PAID FOR IN ACCORDANCE WITH ARTICLE 109.04 OF THE STANDARD SPECIFICATIONS UNLESS A SEPARATE ITEM HAS BEEN PROVIDED.
3. IF THE EXISTING LIDS ARE OPEN, THE FRAME WILL BE ADJUSTED TO THE ELEVATION OF THE MILLED PAVEMENT SURFACE PRIOR TO THE MILLING OPERATION. THE FRAME WILL NOT BE REMOVED AND COVERED BY THE METAL PLATE.
4. CITY OF CHICAGO CASTINGS ARE THE PROPERTY OF THE CITY AND THE CONTRACTOR SHALL NOTIFY THE CITY FOR REMOVAL AND DISPOSITION OF THE CASTINGS.

WHEN STRUCTURES ARE TO BE ADJUSTED OR RECONSTRUCTED, THE LOWERING AND RAISING OF THE FRAMES AND LIDS WILL NOT BE PAID FOR SEPARATELY BUT WILL BE INCLUDED IN THE COST OF THE CORRESPONDING PAY ITEM.

THE PROCEDURE EXPLAINED ABOVE SHALL CONFORM TO THE APPLICABLE PORTIONS OF SECTIONS 353, 406, 602, AND 603 OF THE IDOT STANDARD SPECIFICATIONS FOR ROAD AND BRIDGE CONSTRUCTION.

NOT TO SCALE

ILLINOIS DEPARTMENT OF TRANSPORTATION	REVISIONS	
	NAME	DATE
DETAILS FOR FRAMES AND LIDS ADJUSTMENT WITH MILLING	R. SHAH	10/25/94
	R. SHAH	01/30/95
	R. SHAH	03/10/95
	A. AMMAS	03/21/97
	R. WEIDEMAN	05/14/04
BD600-03 (BD-9)		

REVISION		STANDARD D-64
DATE	COMMENT	COUNTY OF COOK
01-27-12 - MK	REF: IDOT BD600-03 (BD-9)	DEPARTMENT OF TRANSPORTATION & HIGHWAYS
		FRAMES AND LIDS TO BE ADJUSTED (SPECIAL)
		COMPUTED MK · APPROVED JANUARY 27, 2012
		DRAWN MAL
		CHECKED MK · ROBERT F. MACK, P.E., CEM

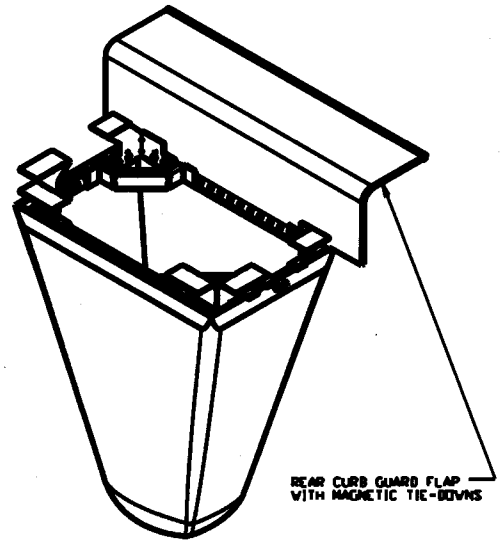

TYPICAL CURB BOX
INLET FILTER

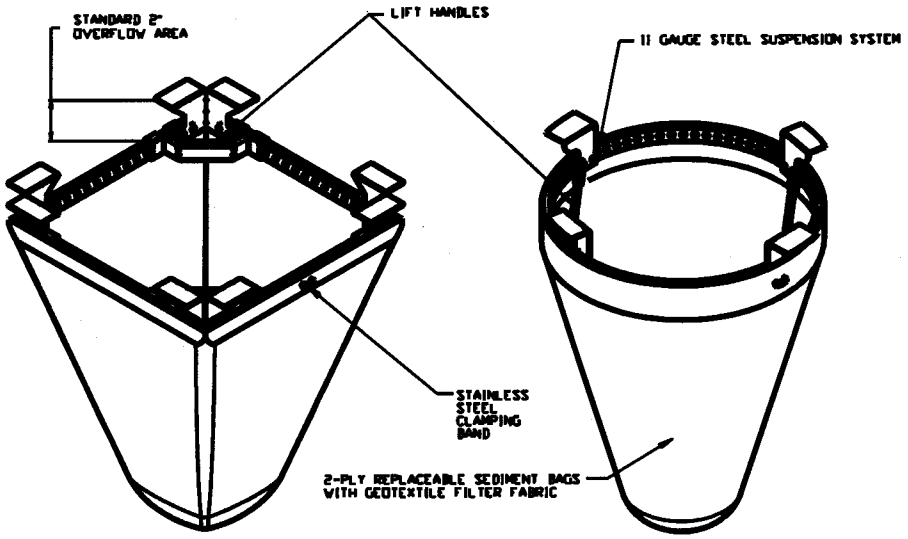

TYPICAL FLAT/RECTANGULAR/ROLLED CURB
INLET FILTER

TYPICAL ROUND
INLET FILTER

IDOT Inlet Filter Specifications		
Material Property	*Test Method*	*Value (min ave)*
> NonWoven Geotextile Inner Filter Bag Specs (2 ft³ min vol)		
Grab Tensile	ASTM D 4632	100 lbs
Puncture Strength	ASTM D 4833	65lbs
Trapezoidal Tear	ASTM D 4533	45 lbs
UV Resistance	ASTM D 4355	70% at 500 hrs
App Open Size (AOS)	ASTM D 4751	70 sieve (.212 mm)
Permittivity	ASTM D 4491	2.0/sec
Water Flow Rate	ASTM D 4491	145 gpm/sqft
> Polyester Outer Reinforcement Bag Specifications		
Weight	ASTM D 3776	4.55 oz/sqyd +/- 15%
Thickness	ASTM D 1777	.040 +/- .005
> Frame Construction		
A36 Structural Steel; 11 Guage; Zinc Plated	ASTM A 576	*Tensile Strength > 58,000 psi; Yield Strength > 36,000 psi*

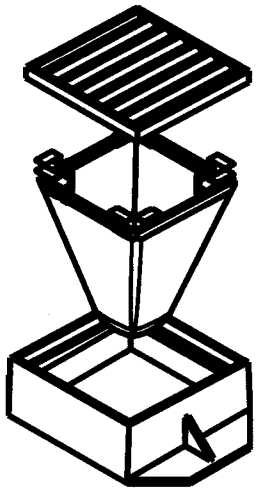

INSTALLATION:
1. REMOVE GRATE
2. DROP FLEXSTORM INLET FILTER ONTO LOAD BEARING LIP OF CASTING OR CONCRETE STRUCTURE
3. REPLACE GRATE

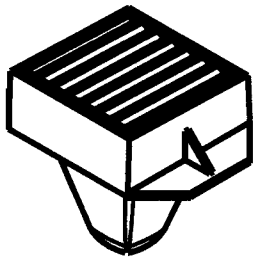

NOT TO SCALE

REVISION	
DATE	COMMENT
04-05-12 - MK	

STANDARD E-16

COUNTY OF COOK
DEPARTMENT OF TRANSPORTATION & HIGHWAYS

INLET FILTER

COMPUTED MAL
DRAWN MAL
CHECKED RFM

APPROVED FEBRUARY 26, 2010

ROBERT F. MACK, P.E. CFM

COUNTY	FISCAL YEAR	SHEET NO.	TOTAL SHEETS
VARIOUS	2014	X	X

SECTION: 13-PREPS-01-RS

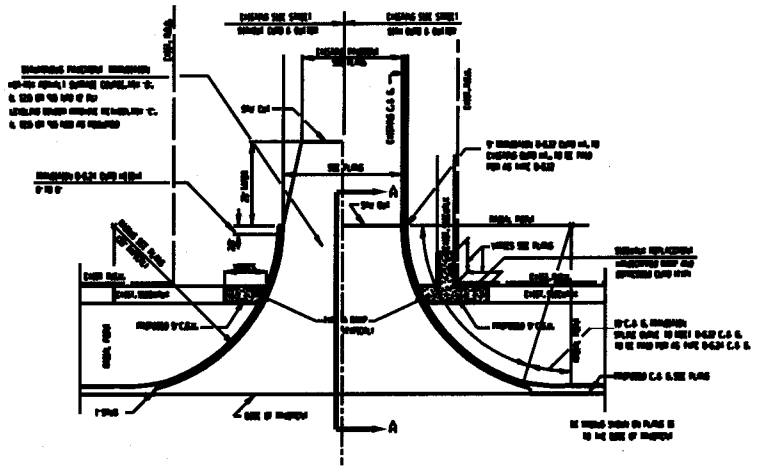

DETAIL-INTERSECTING STREETS AND C.& G. TRANSITIONS

(TYPICAL)

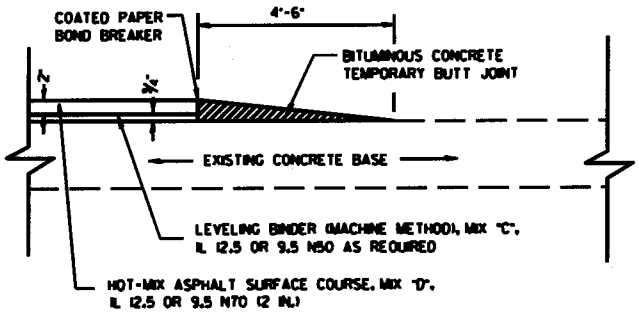

TEMPORARY BUTT JOINT

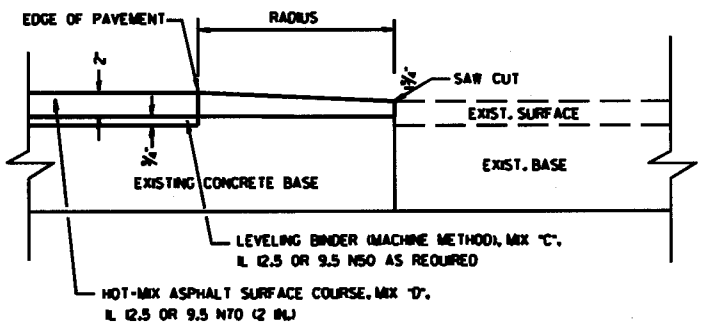

SECTION A-A STREET RETURNS

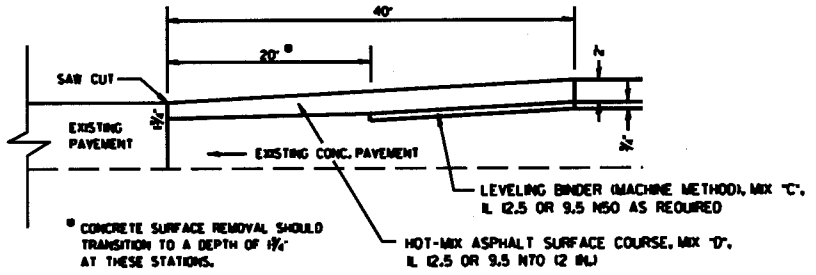

* CONCRETE SURFACE REMOVAL SHOULD TRANSITION TO A DEPTH OF 1¾" AT THESE STATIONS.

LONGITUDINAL SECTIONS

NOTE:
ALL DIMENSIONS ARE INCHES UNLESS OTHERWISE NOTED.

COUNTY OF COOK
DEPARTMENT OF HIGHWAYS
DETAIL-INTERSECTING STREETS AND C.& G. TRANSITIONS
TEMPORARY BUTT JOINTS AND LONGITUDINAL SECTIONS

NOT TO SCALE

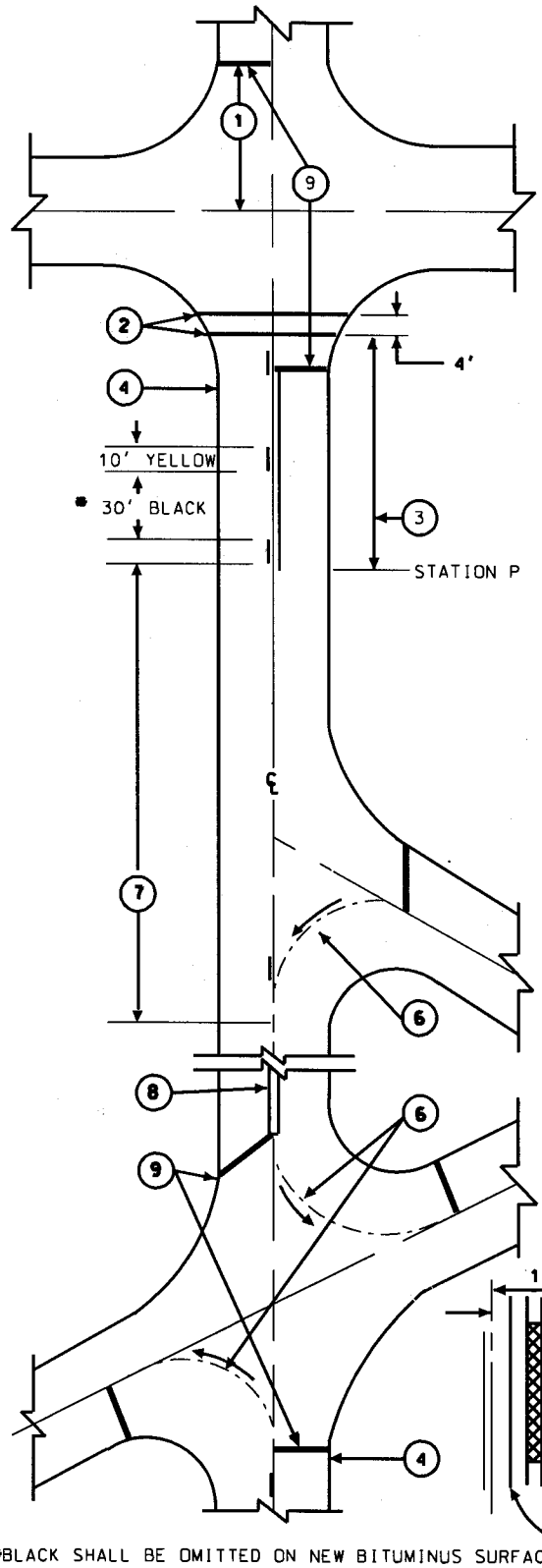

*BLACK SHALL BE OMITTED ON NEW BITUMINUS SURFACE.

TYPICAL NO PASSING ZONE MARKING:

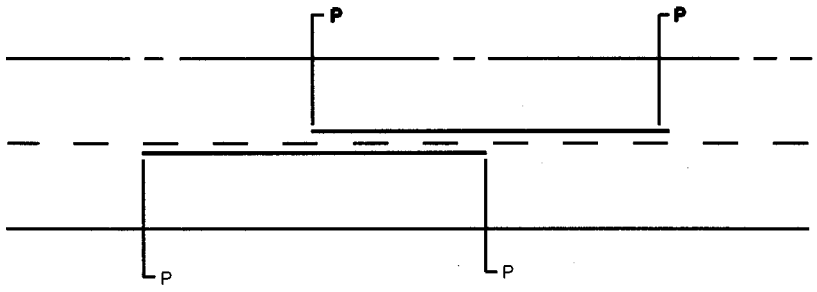

P= DISTANCE STATION ON PLANS OR LOCATED BY THE ENGINEER.

&				
1 6	CROSS ROAD WIDTH	26′	26′ – 48′	48′
	LENGTH OR RADIUS	35′	45′	50′

(2) CROSSWALK: WHERE SHOWN ON THE PLANS OR DESIGNATED BY THE ENGINEER. SEE TMD-107

(3) 4'' YELLOW NO PASSING LINE:STOP LINE APPROACH:AS SHOWN ON THE PLANS OR TABLE:

POSTED SPEED	35	40	45	50	55
LENGTH OF LINE	220′	315′	420′	535′	660′

(4) 4" WHITE EDGELINE. 2" CLEAR FROM EDGE OF PAVEMENT.

(5) EDGELINING AROUND THE STREET RETURNS SHALL BE ONLY BE DONE WHERE DESIGNATED BY THE ENGINEER.

(7) OMIT THE CENTER LINE MARKING ONLY WITHIN THE INTERSECTION OF A DEDICATED STREET, ROAD OR SIGNALIZED ENTRANCE OR DRIVE. THE LENGTH OF THE OMISSION SHOULD NOT BE LESS THAN 70′.

(8) DOUBLE 4" YELLOW CENTER LINE (WHERE SHOWN ON THE PLANS)SPACED 11" O.C..

(9) 24" WHITE STOP LINE (WHERE REQUIRED).

NOTE: WHERE POSTED SPEED LIMIT IS 40 MPH OR MORE AND THE DISTANCE BETWEEN TWO SUCCESSIVE NO-PASSING LINES IS LESS THAN 600′ THE LINES SHALL BE CONNECTED.

TYPICAL MARKING
2 LANE ROADS
TMD-101-5

NOT TO SCALE

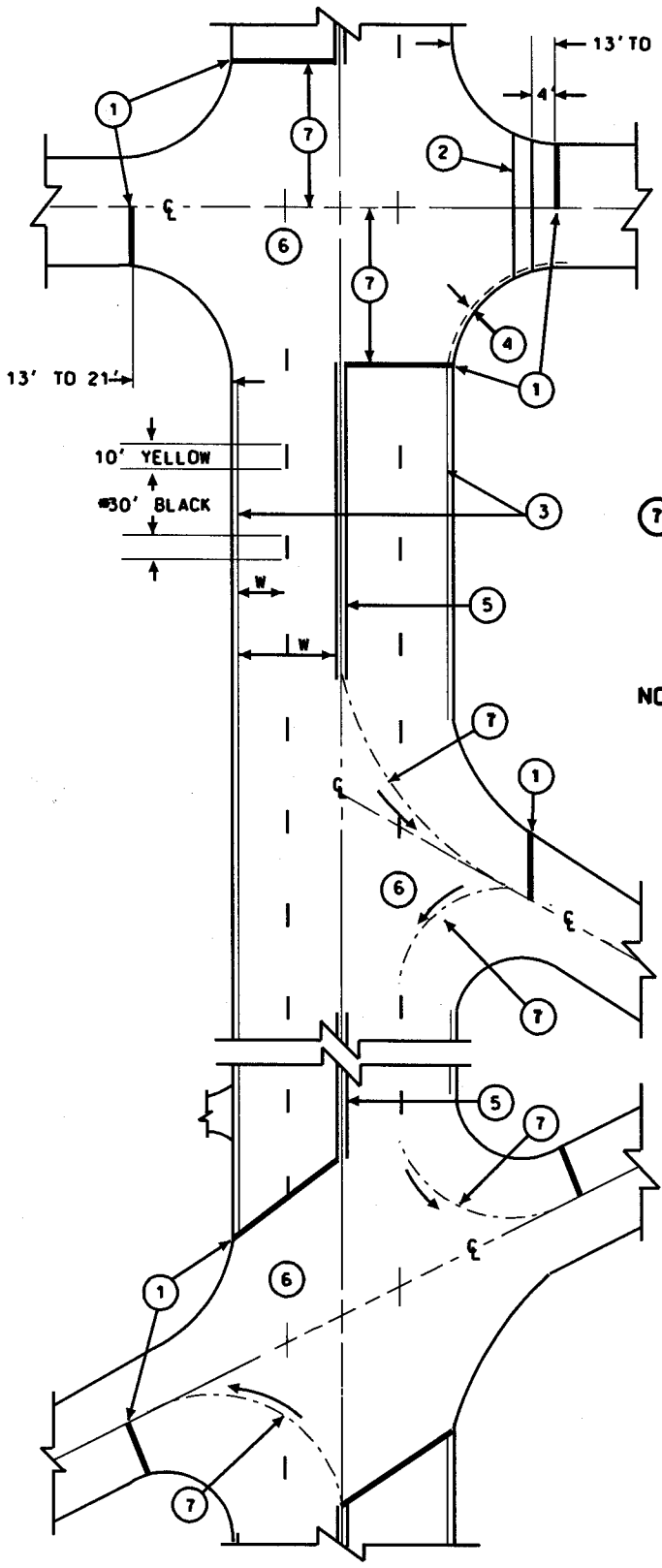

*BLACK SHALL BE OMITTED ON NEW BITUMINUS SURFACE.

(1) 12" WHITE STOPLINE.

(2) CROSSWALK: WHERE SHOWN ON THE PLANS OR DESIGNATED BY THE ENGINEER. SEE TMD-107

(3) 4" EDGELINE ;2" CLEAR FROM EDGE OF PAVEMENT

(4) EDGELINING AROUND STREET RETURNS SHALL BE DONE WHERE DESIGNATED BY THE ENGINEER.

(5) DOUBLE 4" YELLOW CENTER LINE(WHERE SHOWN ON THE PLANS)SPACED 11" O.C.AND WHEN SPECIFIED A 4" BLACK LINE CENTERED BETWEEN.*

(6) OMIT THE CENTER LINE MARKING ONLY WITHIN THE INTERSECTION OF A DEDICATED STREET, ROAD OR SIGNALIZED ENTRANCE OR DRIVE. THE LENGTH OF THE OMISSION SHOULD NOT BE LESS THAN 70'.

(7)

CROSS ROAD WIDTH	26'	26'- 48'	48'
LENGTH OR RADIUS	35'	45'	50'

PLACE STOP LINE (WHERE APPLICABLE) AND BEGIN CENTERLINE OMISSION AT THE TANGENT POINT OF THE RETURNING RADIUS AS SHOWN.

NOTE: ANY VARIATIONS FROM THIS STANDARD SHALL BE AS SHOWN ON THE PLANS OR DIRECTED BY THE ENGINEER.

TYPICAL MARKING
4-LANE UNDIVIDED ROADS
TMD-102-5

NOT TO SCALE

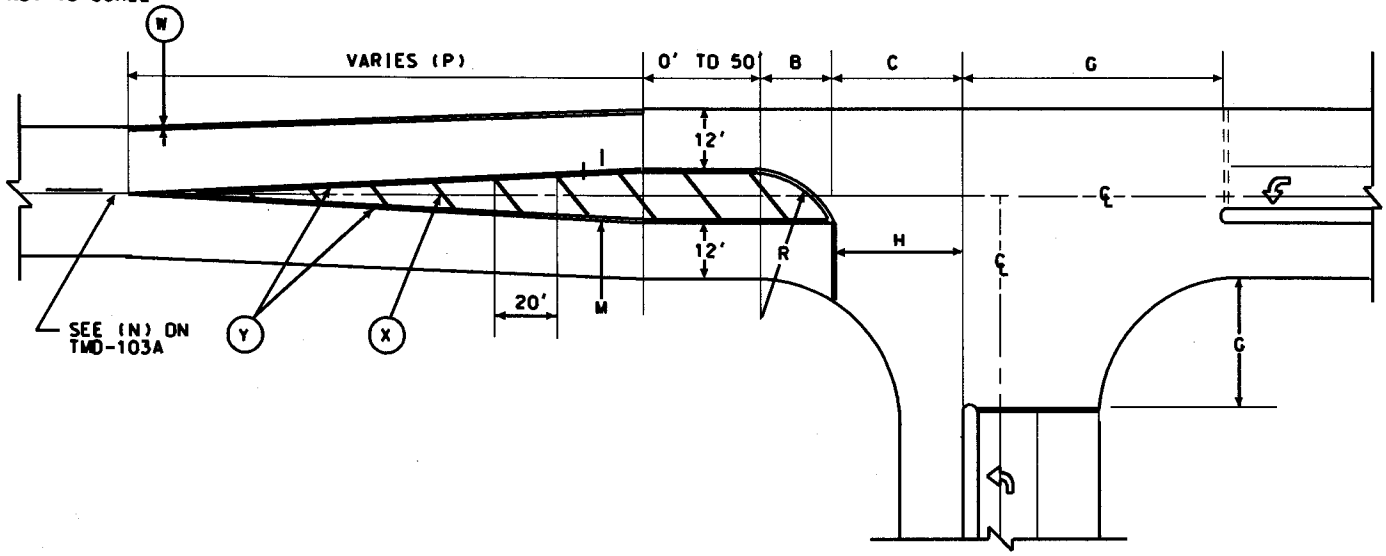

TYPE OF TURNING TRAFFIC ↓	B		C	G●	H●	R
	M=12'	M=16'				
NORMAL BALANCE	32'	36'	30'	45'	32'	50'
HIGH % OF SEMI-TRAILER TRUCKS	58'	67'	32'	50'	35'	150'

(1) SYMMETRICAL WIDENING

(2) RIGHT SIDE WIDENING ONLY

(3) LEFT SIDE WIDENING ONLY

(4) T-INTERSECTION WIDENING

(5) CENTER LANE TWO WAY LEFT TURN (SEE TMD-103D)

(V) 6" WHITE LINE: 6" BLACK / WHITE LINE (SEE TMD-105).

(W) 8" WHITE LINE ALONG REDUCTION TAPER (SEE TMD-112).

(X) 12" YELLOW DIAGONAL LINES: 45 ON 20' CENTERS (SEE TMD-103A).

(Y) DOUBLE 4" YELLOW LINES ON 11' CENTERS WITH 4" BLACK BETWEEN.

(Z) STANDARD WHITE LETTERS AND SYMBOLS (SEE TMD-105 &106).

NOTE: 4" WHITE EDGELINE SHALL BE APPLIED IN ALL CASES EXCEPT ALONG REDUCTION TAPERS WHERE 8" WHITE IS APPLIED AND WHERE DIRECTED OTHER WISE BY THE ENGINEER.

TYPICAL MARKING
3 LANE INTERSECTION APPROACH
TMD-103C

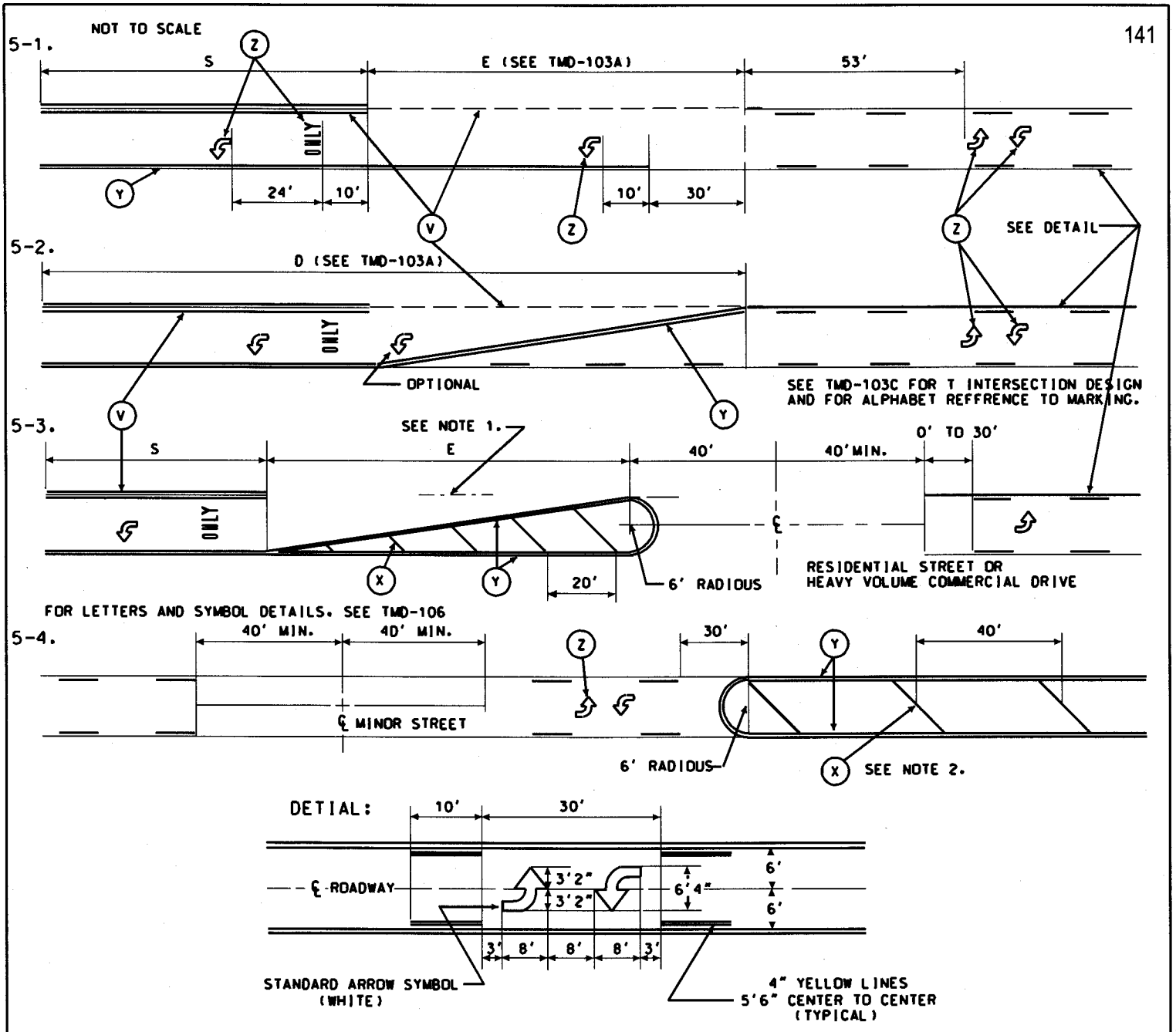

NOTE: 1. EXCEPT ON GROVES. THE DASHED LANE ENTRANCE LINE SHALL BE OMITTED WHERE E IS 100'FT. OR LESS.

2. THRU ANY SECTION OF A 3 OR 5 LANE WIDTH ROADWAY WHERE NO LEFT TURNS ARE REQUIRED WITHIN A DISTANCE OF AT 600'FT. THE CENTER LANE SHOULD BE MARKED AS A MEDIAN. THE 12" DIAGONALS SHALL NORMALLY BE SPACED ON 20' CENTERS. WHERE THE LENGTH OF THE FULL WIDTH MEDIAN IS LONGER 330'FT. THE DIAGONAL SHALL BE SPACED ON 40'FT. CENTERS AS SHOWN.

3. THE DESIGNS SHOWN ARE TYPICAL EXAMPLES OF CENTER LANE MARKING: A DETAILED PLAN SHOULD BE PROVIDED FOR SPECIFIC LOCATIONS.

TYPICAL TWO-WAY LEFT TURN CENTER LANE MARKING
TMD-103D-2

NOT TO SCALE

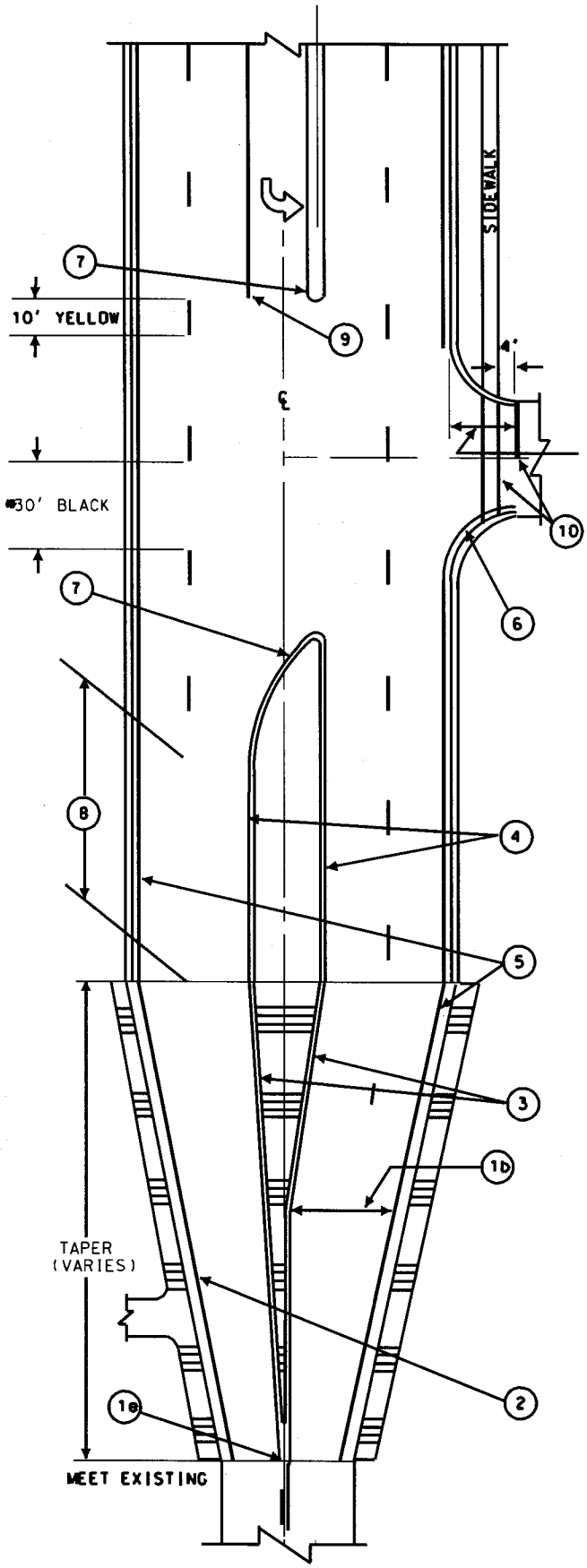

(1b) CENTERLINE TAPER BEGINS WHERE PAVEMENT REACHES TWO LANES WIDE.

(1c) REDUCTION TAPERS END AT EXISTING SINGLE LANE WIDTH.

(2) 8" WIDE WHITE EDGELINE ALONG REDUCTION SIDE OF TAPER. SEE TMD-112.

(3) DOUBLE 4" YELLOW LINES SPACED 11" ON CENTER WITH 4" BLACK LINE CENTERED BETWEEN. *ON EACH SIDE APPROACHING THE MEDIAN THE INSIDE YELLOW LINE (AND BLACK LINE)* SHALL END 2" CLEAR OF THE MEDIAN.

(4) MEDIAN EDGELINE AT 2" CLEAR FRON EDGE OF THE PAVEMENT.

(5) 4" WHITE CONTINUOUS EDGELINE, 2" CLEAR FROM THE EDGE OF PAVEMENT.

(6) EDGELINING AROUND STREET RETURNS SHALL ONLY BE DONE WHERE DESIGNATED BY THE ENGINEER.

(7) FOR DETAILS OF MEDIAN NOSE MARKING SEE TMD-109 OR 110.

(8) IN ADVANCE OF A DROP LANE TRANSITION OMIT THE LAST 3 DASHES OF THE LANE LINE APPROACH WHERE THE POSTED SPEED LIMIT IS 40 OR LESS. OMIT THE LAST 5 DASHES WHERE THE SPEED LIMIT IS 45 OR HIGHER.

(9) AT T INTERSECTIONS WITH NO STOP LINE PRESENT, THE 6" WHITE TURN LANE LINE SHALL BE EXTENDED UP TO 20' BEYOND THE MEDIAN NOSE. IN ALL OTHER CASES, THIS LINE SHALL END IN LINE WITH THE MEDIAN NOSE .SEE TMD-105.

(10) CROSSWALKS AND / OR STOP LINES ON SIDE ROADS AS SHOWN SHALL ONLY BE APPLIED WHERE REQUIRED ON NEW SURFACES AND/OR WHERE DESIGNATED BY THE ENGINEER.
FOR TYPICAL STOP LINE LOCATION ON THE MAIN ROADWAY SEE TMD-102.

*BLACK LINES SHALL BE OMITTED ON NEW BITUMINOUS SURFACES.

TYPICAL MARKING:
MULTILANE DIVIDED ROADS
TMD-104-5

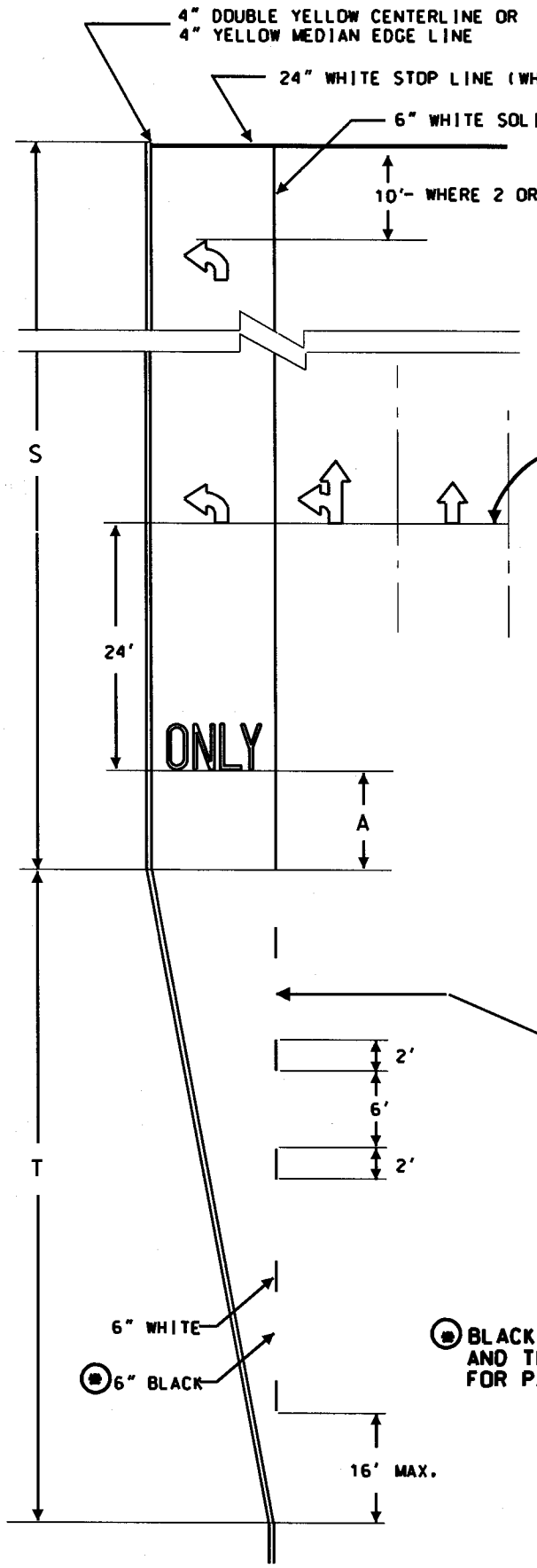

DIMENSIONS APPLY TO ALL LANES REQUIRING DIRECTIONAL MARKING.

ARROW SYMBOLS WHERE REQUIRED IN ADJACENT LANES SHALL BE IN LINE.

ARROW SYMBOLS WHERE REQUIRED IN ADJACENT LANES SHALL BE IN LINE.

S IN FEET	A IN FEET	NO SETS REQUIRED (ONLY)
LESS THAN 42	0	
42-52	5	1
52-200		
200-400	10	2
400-600		3*

*SPACED AT EQUAL INTERVALS

BLACK/WHITE LINE AS SHOWN SHALL BE APPLIED ON ALL COUNTY ROADS EXCEPT T-INTERSECTION APPROACES OR AS DIRECTED BY THE ENGINEER.(*)

THE LENGTH OF THE BLACK / WHITE LINE SHALL BE EQUAL TO (T) OR 128'; WHICHEVER IS LONGER. HOWEVER, THE SOLID LINE SHALL NOT BE LESS THAN TWO THIRDS THE LENGTH OF (S) OR 32', WHICHEVER IS LONGER.

(*) BLACK SHALL BE OMITED ON NEW BITUMINOUS SURFACES. AND THE DASHED LINE SHALL BE INCLUDED IN THE COST FOR PAVEMENT MARKING LINE - 6" WHITE.

DIRECTIONAL LANE MARKING LAYOUT
TMD- 105-4

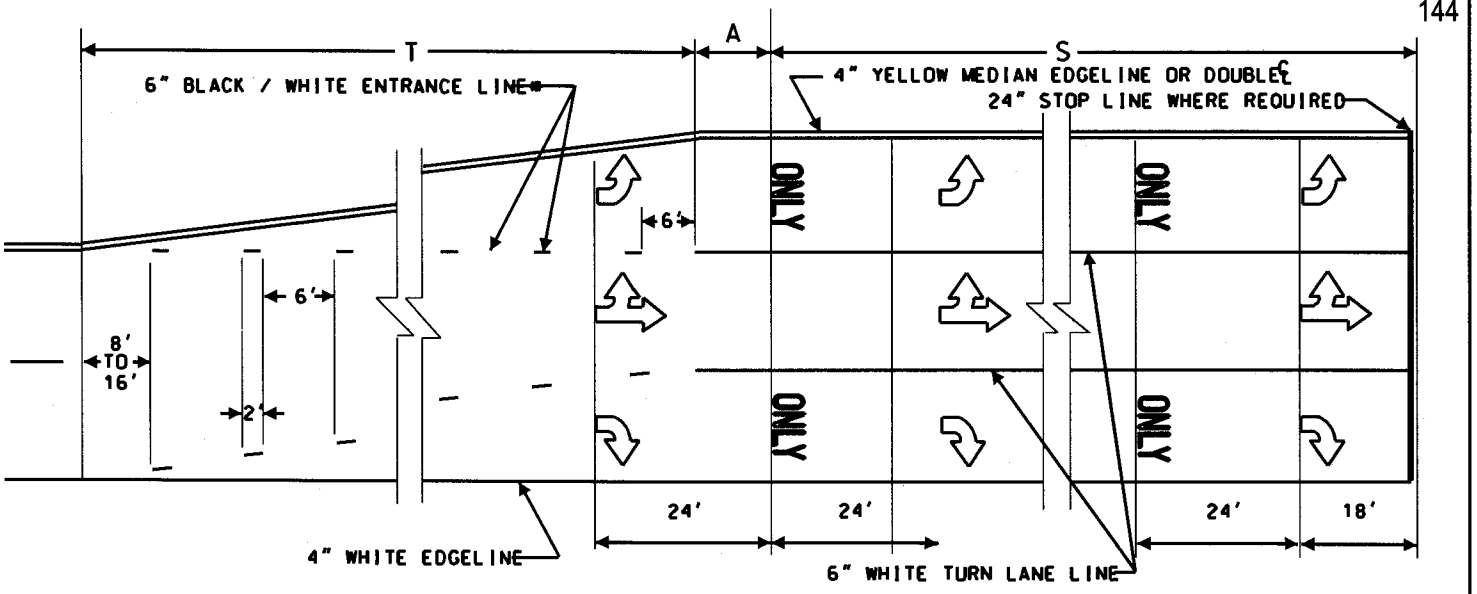

SEE TMD-105A-5 FOR LETTERS AND SYMBOL DETAILS

S IN FEET	LESS THAN 42	42-52	52-200	200-400	400-600
A IN FEET	0	5	10	10	10
SETS REQ'D EACH LANE	↱ ONLY ↱			↱ ONLY ↱ ONLY ↱	↱ ONLY ↱ ONLY ↱ ONLY ↱

UNLESS OTHERWISE DIRECTED, BLACK / WHITE ENTRANCE LINES* SHALL BE APPLIED ON ALL COOK COUNTY ROADS EXCEPT APPROACHES TO (T) INTERSECTIONS.

THE LENGTH OF THE BLACK / WHITE LINE SHALL BE EQUAL TO (T) OR 128', WHICHEVER IS LONGER. HOWEVER, THE SOLID TURN LANE LINE SHALL BE LESS THAN TWO THIRDS THE LENGTH OF (S) OR 32', WHICHEVER IS LONGER.

* BLACK SHALL BE OMITED ON NEW BITUMINOUS SURFACES, AND THE DASHED LINE SHALL BE INCLUDED IN THE COST FOR PAVEMENT MARKING LINE - 6" WHITE.

ALTERNATE DESIGN:
DIRECTIONAL LANE MARKING LAYOUT
TMD-105-A

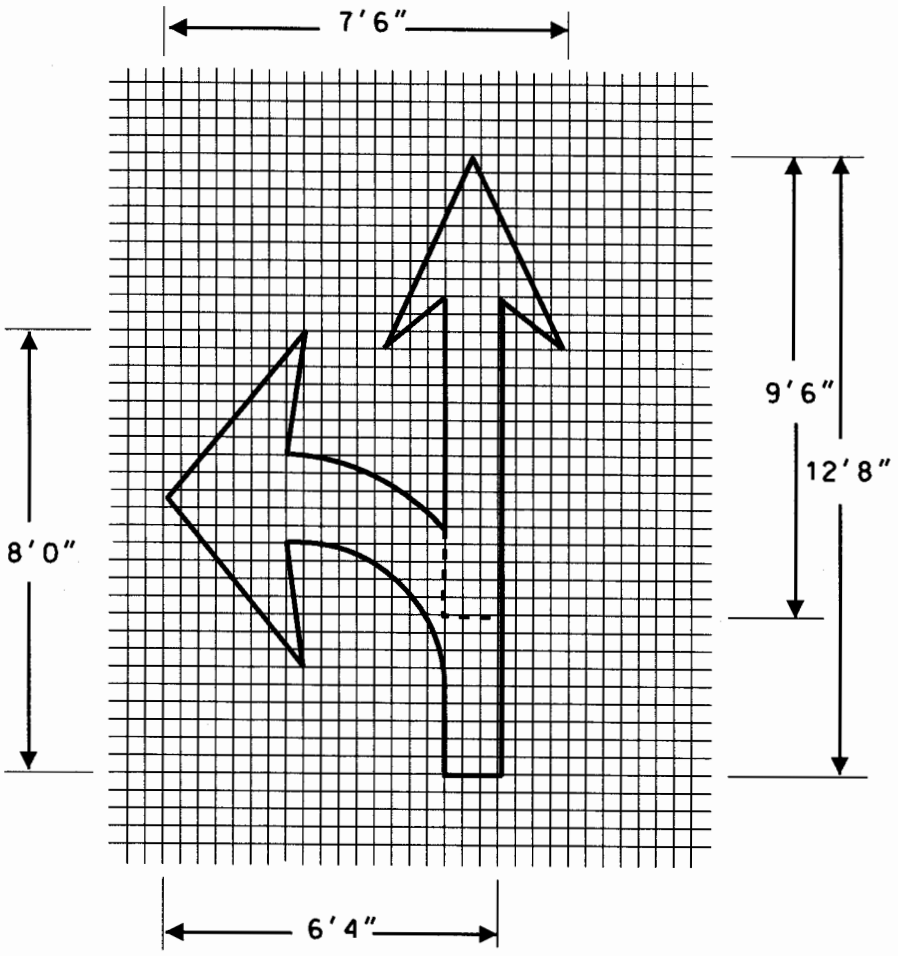

GRID SCALE:

EACH SQUARE = 4 INCHES ON A SIDE.

ALL LETTERS AND SYMBOLS: WHITE

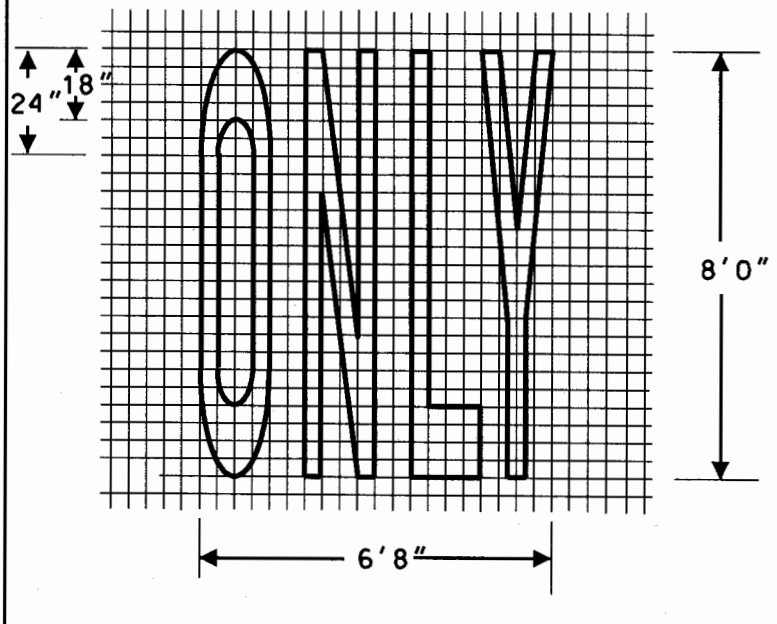

	SQ.FT.
OR	15.6
	11.7
OR	26.0
	27.2
ONLY	22.6

FOR PLACEMENT SEE TMD-105

DIRECTIONAL LANE MARKING DETAILS
TMD-106-5

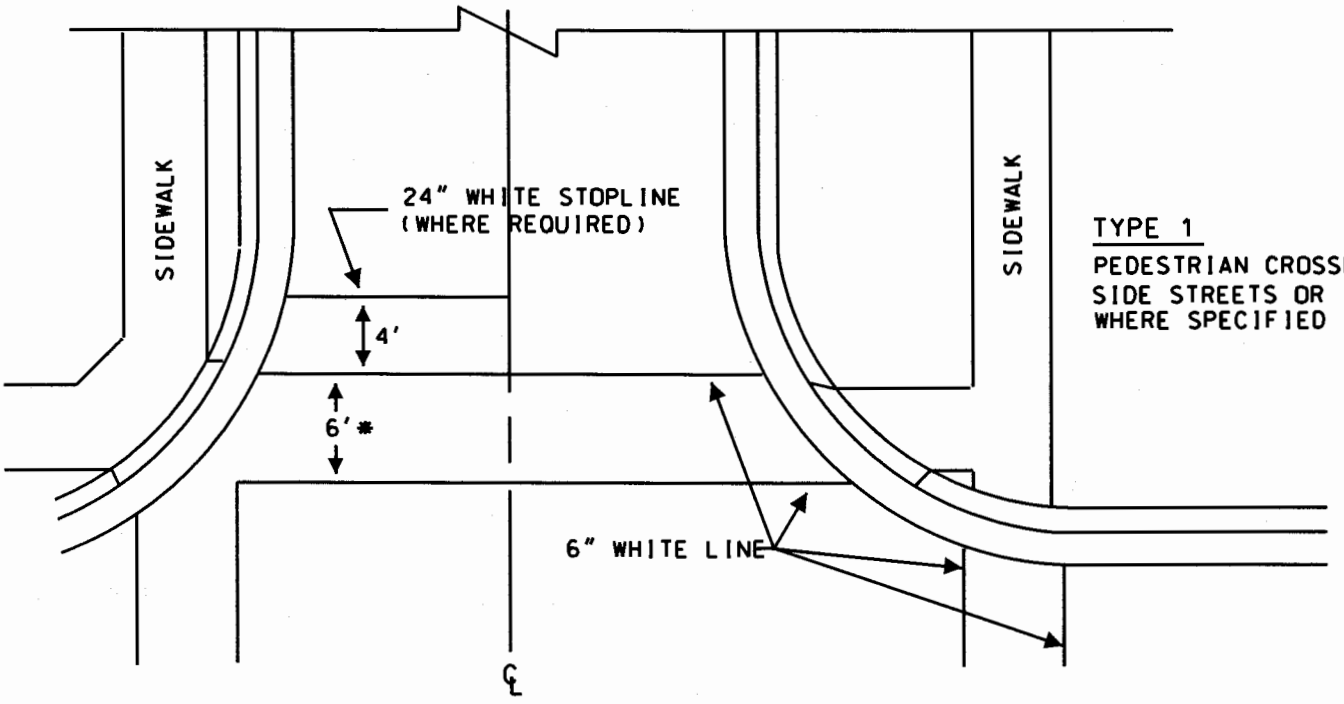

TYPE 1

PEDESTRIAN CROSSNG:
SIDE STREETS OR
WHERE SPECIFIED

*THIS DIMENSION SHOULD BE INCREASED WHERE SIDEWALK WIDTHS WARRENT.

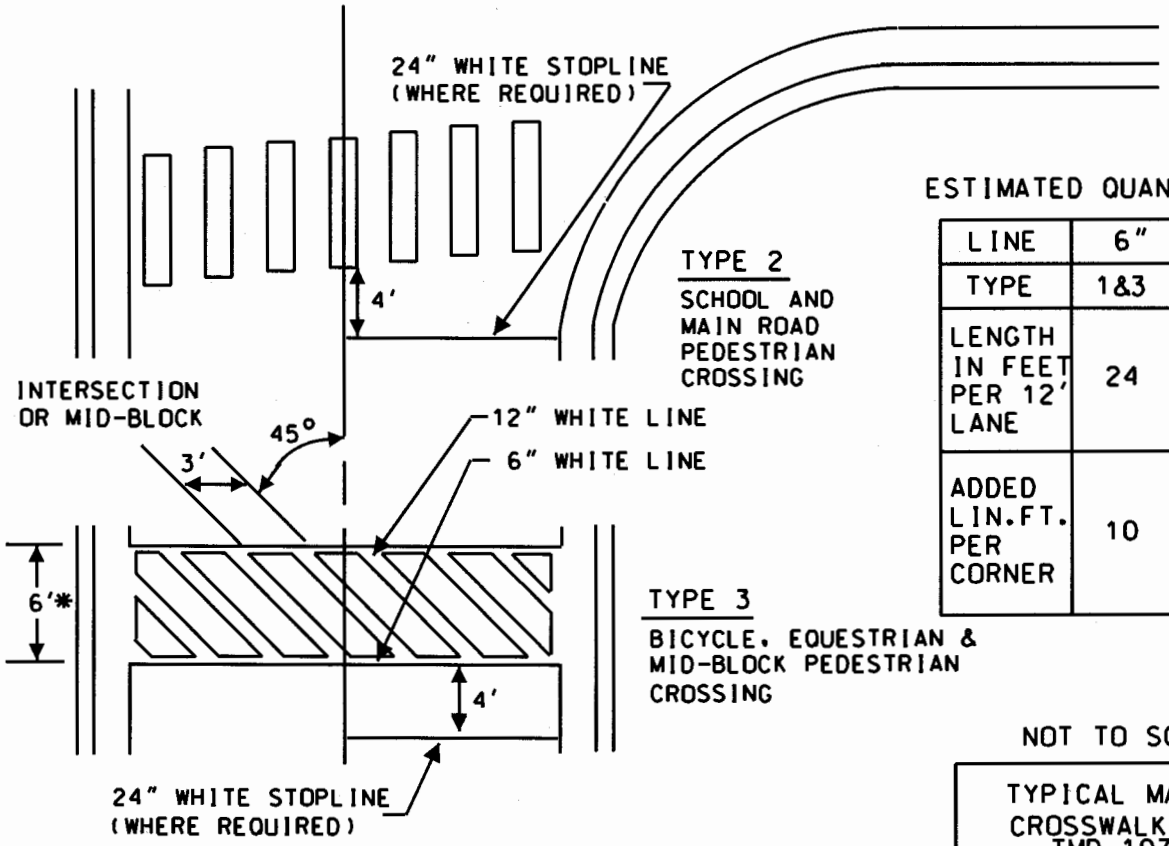

TYPE 2

SCHOOL AND
MAIN ROAD
PEDESTRIAN
CROSSING

TYPE 3

BICYCLE, EQUESTRIAN &
MID-BLOCK PEDESTRIAN
CROSSING

ESTIMATED QUANTITIES:

LINE	6"	12"
TYPE	1&3	2&3
LENGTH IN FEET PER 12' LANE	24	24
ADDED LIN.FT. PER CORNER	10	6

NOT TO SCALE:

TYPICAL MARKING
CROSSWALKS
TMD-107-2

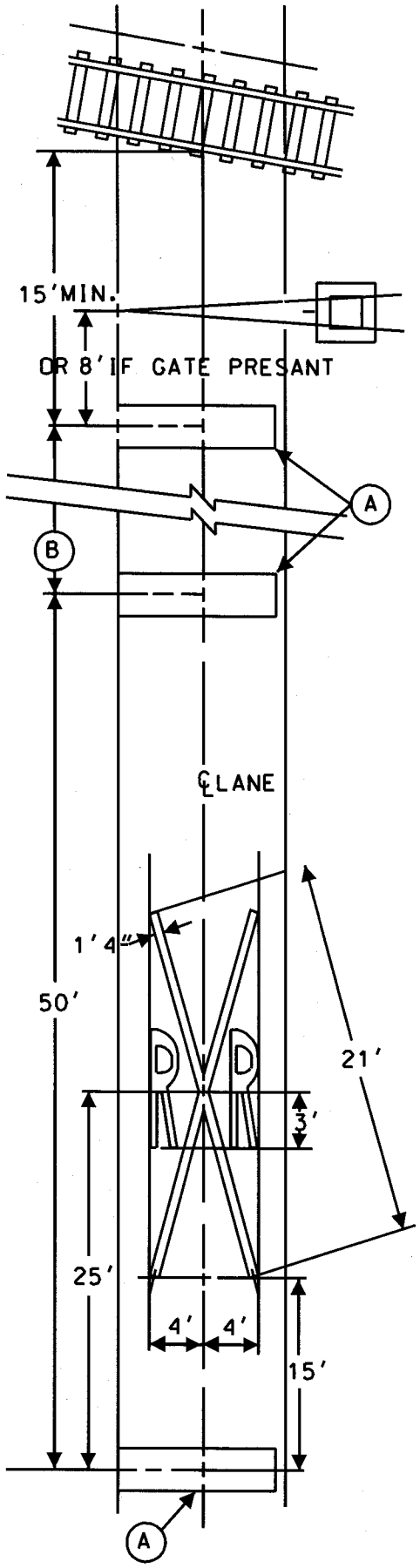

GRID SCALE:
THE SIDE OF EACH SOUARE = 3"

ALL MARKING SHALL BE WHITE.

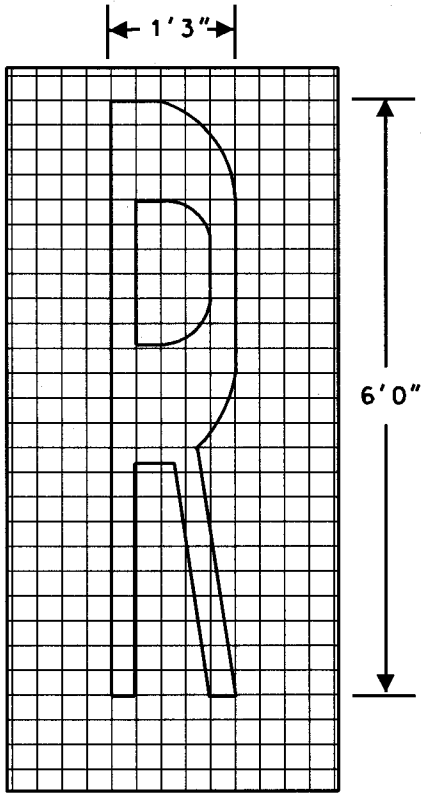

2'0"x WIDTH OF THE LANE (S) PAID FOR AS ...LINE - 24". THE BANDS SHALL EXTEND ACROSS ALL APROACH LANES WITH SEPARATE "RXR" SYMBOLS IN EACH LANE.

POSTED SPEED(MPH)	35	40	45	50	55
DISIRED	200	300	400	500	600
MINIMUM	50	150	300	400	600

OR AS LOCATED ON THE PLANS OR AS DERECTED BY THE ENGINEER.

EACH "R"= 3.6 SQ.FT. "X"= 54 SQ.FT.

PAID FOR AS LETTERS AND SYMBOLS. 61.2 SQ.FT. PER EACH APPROACH LANE.

NOT TO SCALE:

APPROACH MARKING
RAILROAD GRADE CROSSING
TMD-108-3

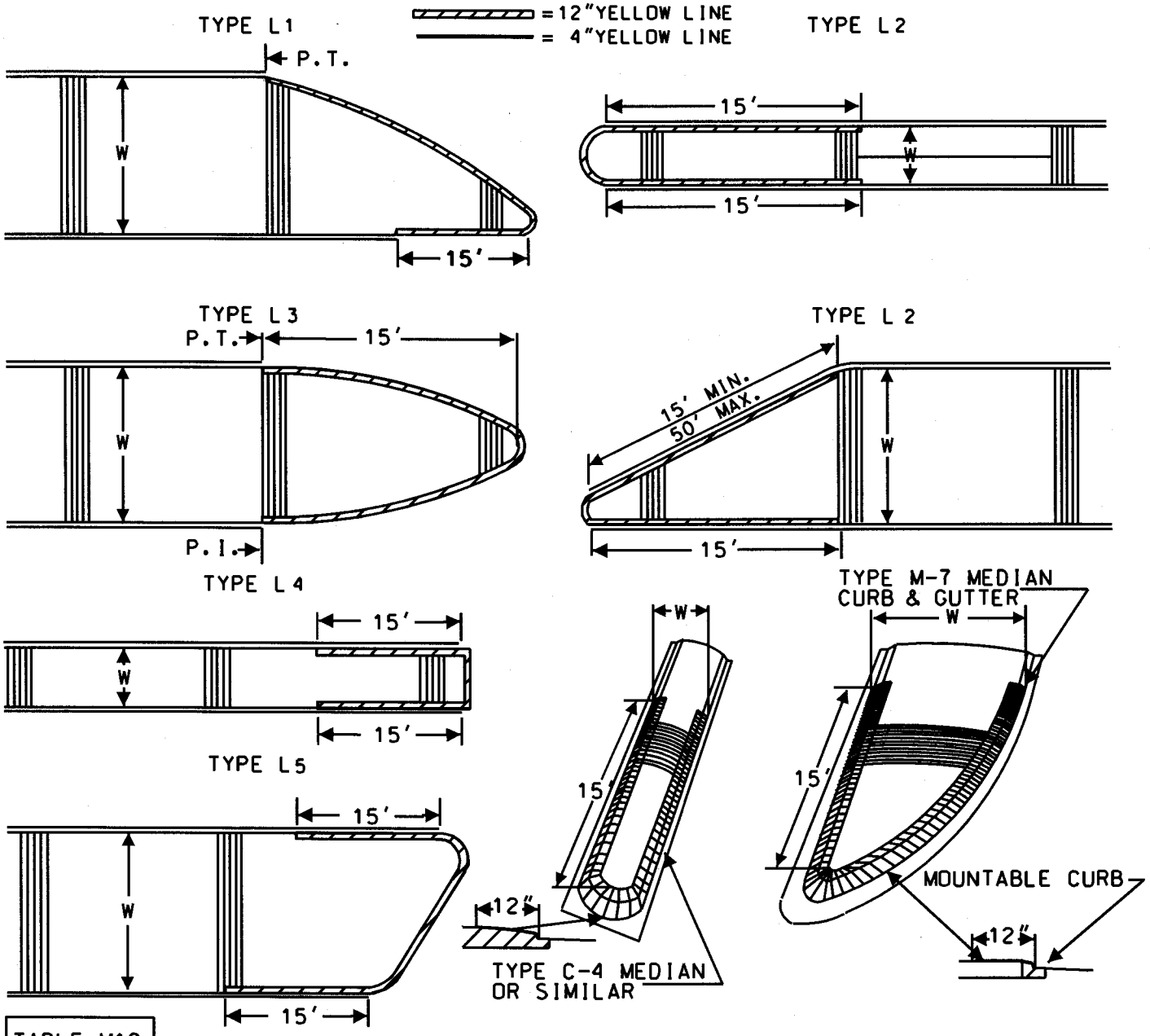

TABLE M12

TOTAL APPROXIMATE LENGTH IN FEET FOR 12"YELLOW LINE

TYPE	W	2'	4'	6'	8'	10'	12'	14'	16'
	L1	-	-	-	40	45	50	55	60
	L2	31	35	38	41	44	45	49	58
	L3	-	-	-	36	41	45	49	58
	L4	32	34	36	38	-	-	-	-
	L5	-	-	37	40	43	46	48	51

TWO WAY TRAFFIC:

NOT TO SCALE:

MOUNTABLE MEDIANS
TYPICAL NOSE MARKING
TMD-109-3

= 12" YELLOW LINE
= 4" YELLOW LINE

TYPE L1

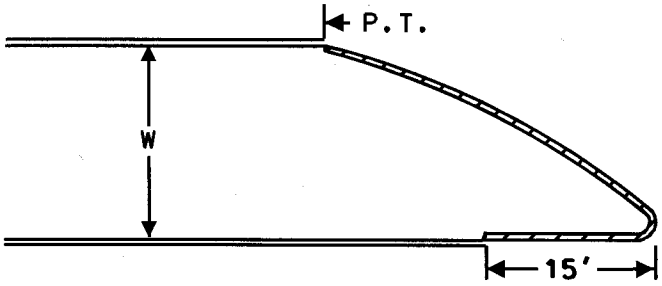

TYPE L2

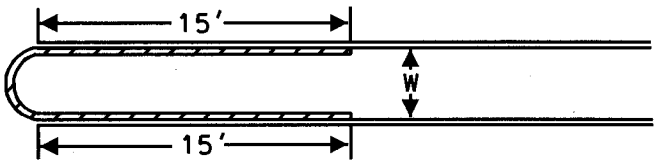

TYPE L3

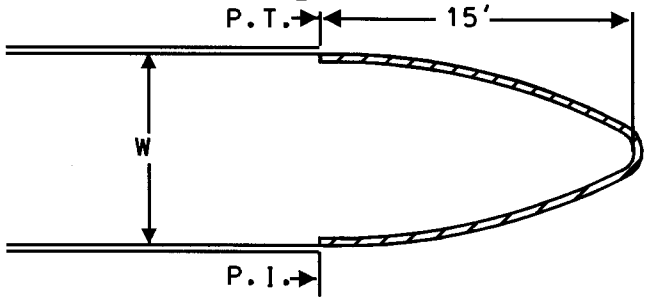

TYPE L2

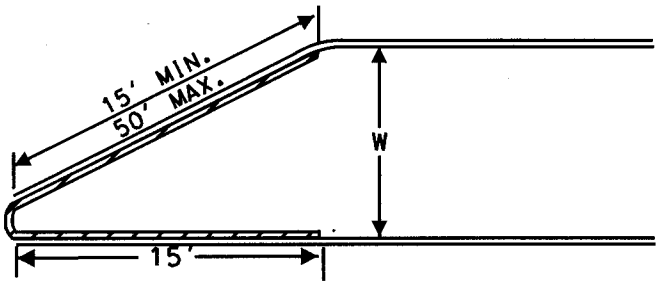

TYPE L5

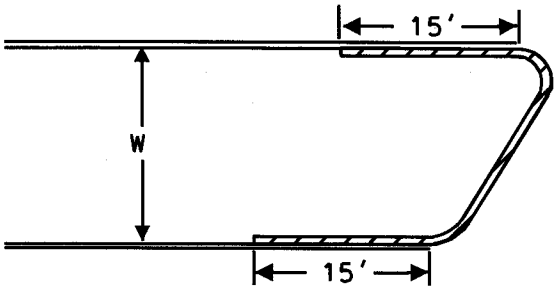

TYPE L6

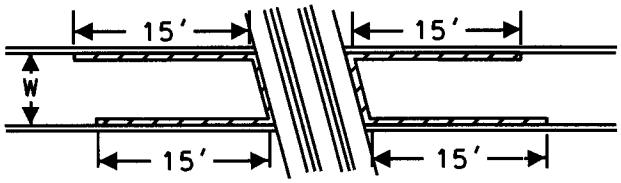

RAILROAD CROSSING

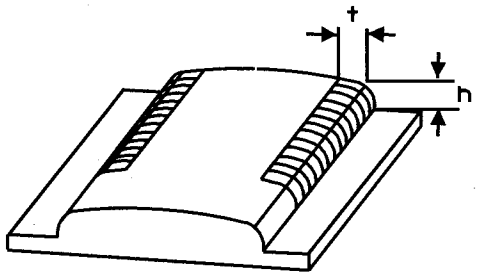

t + h = 12"

TABLE B12

TOTAL APPROXIMATE LENGTH IN FEET FOR 12" YELLOW LINE

TYPE	W	2'	4'	6'	8'	10'	12'	14'	16'
	L1	-	-	-	40	45	50	55	60
	L2	31	35	38	41	44	49	50	54
	L3	-	-	-	36	41	45	49	58
	L5	-	-	37	40	43	46	48	51
	L	-	-	36	38	40	42	44	46

EACH APPROACH

TWO WAY TRAFFIC:

NOT TO SCALE:

BARRIER MEDIANS
TYPICAL NOSE MARKING
TMD-110-2

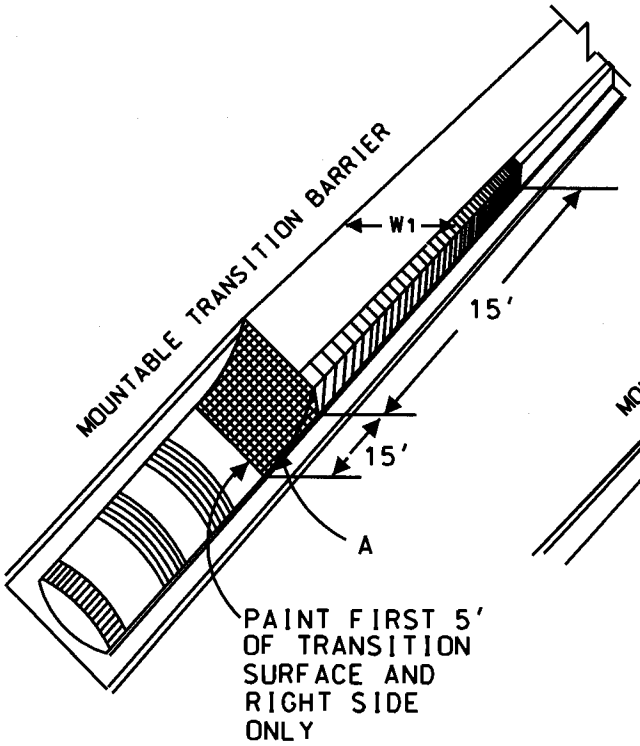

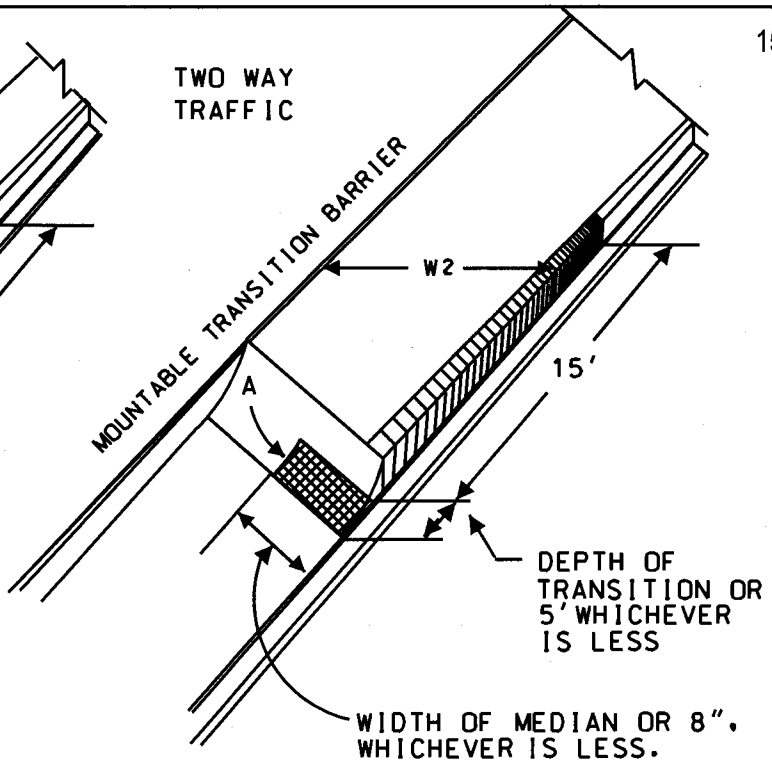

MOUNTABLE TO BARRIER MEDIANS TYPICAL TRANSITION:

12"YELLOW LINE

YELLOW MEDIAN

4"YELLOW LINE

12"OR 6"WHITE LINE

APPROXAMATE AREA IN SQUARE F.T. FOR PAINTED YELLOW MEDIAN (A)

	W1				W2
	2'	4'	6'	8'	8'-16'
(A)	11.3	21.3	31.3	41.3	41.3

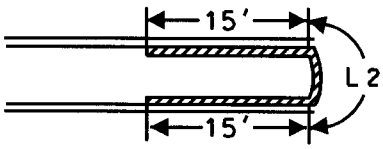

L2 SEE TABLE M12 B12 OR

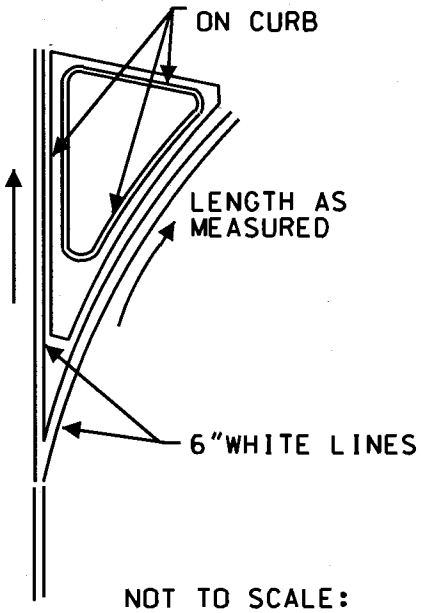

NOT TO SCALE:

GENERAL NOTE:

SPECIAL CONDITIONS NOT SHOWN ON THESE STANDARDS SHALL BE MARKED IN ACCORDANCE WITH PLANES SUBMITTED FOR THE SPECIFIC LOCATION. WHERE PLANS ARE NOT AVAILABLE, THE MARKINGS SHALL BE IN ACCORDANCE WITH THE APPLICABLE PORTIONS IN PART III OF THE 1988 EDITION OF THE MANUAL ON UNIFORM TRAFFIC CONTROL DEVICES. THE MARCH, 1990 ILLINIOS SUPLEMENT TO THE MANUAL AND AS SPECIFIED BY THE TRAFFIC ENGINEER.

BARRIER ISLANDS
TYPICAL MARKINGS
TMD-111-3

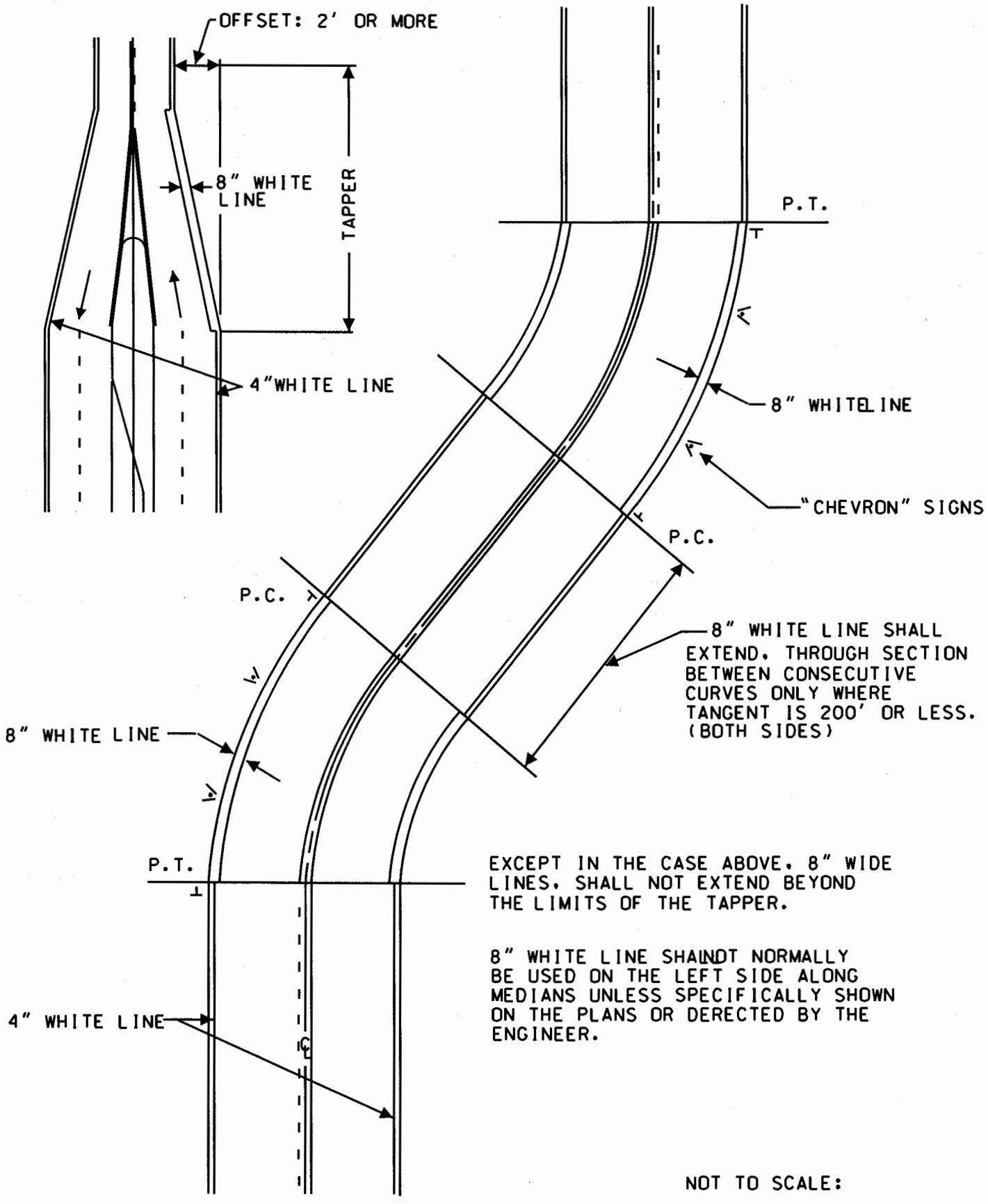

NOT TO SCALE:

TYPICAL MARKING
EDGELINE ALONG CURVES AND LANE REDUCTIONS
TMD- 112-3

2 LANE-2 WAY

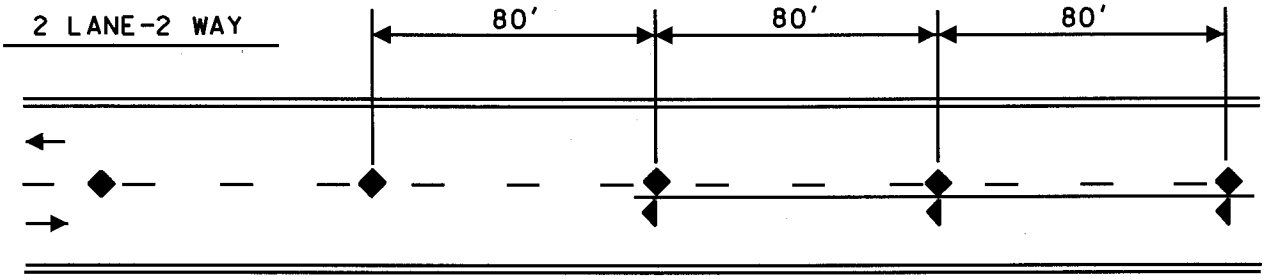

40' O.C. THROUGH CURVE

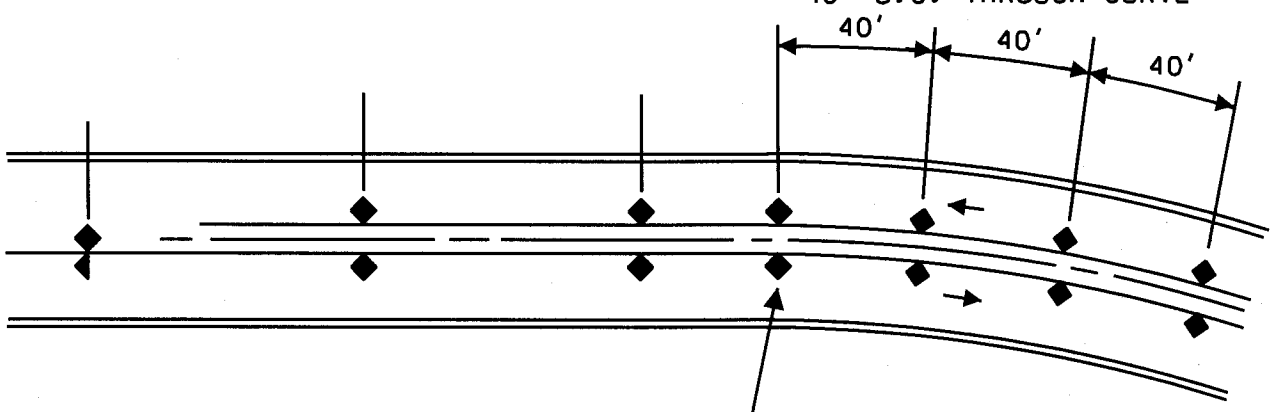

120' O.C. WHERE POSTED
SPEED IS HIGHER THAN 45 M.P.H.

SEQUENCE OF REDUCED SPACING SHALL BEGIN AND END A MAXIMUM OF 20' IN ADVANCE OF OR BEYOND THE BEGINNING (AND END) OF CURVE.

MULTILANE-2 WAY

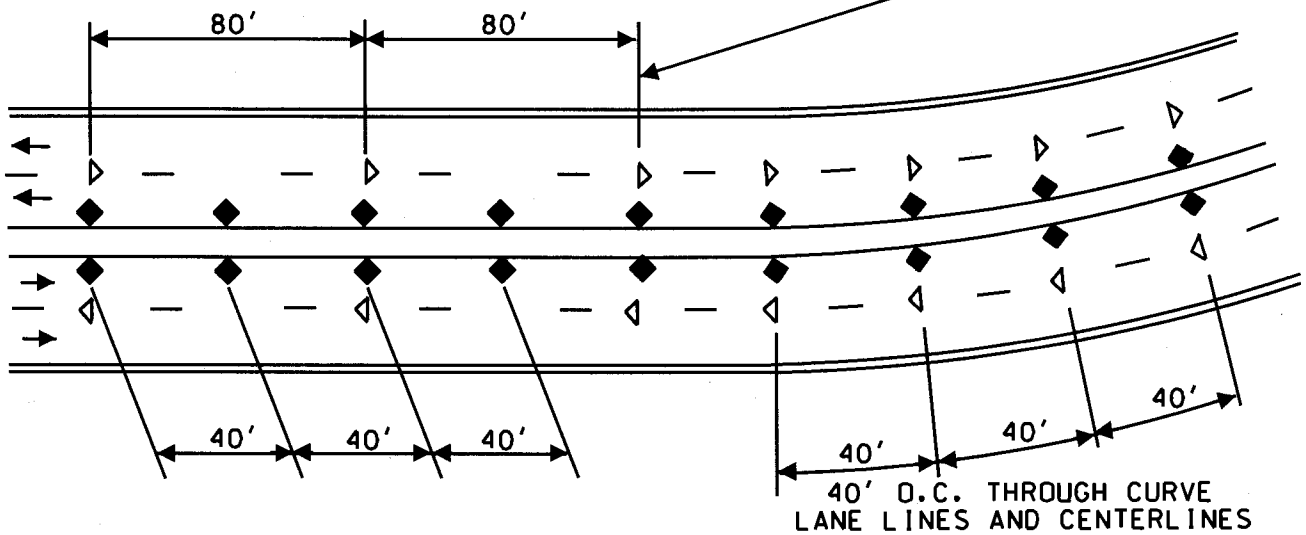

40' O.C. THROUGH CURVE
LANE LINES AND CENTERLINES

UNLESS OTHERWISE DIRECTED, MARKERS SHALL NOT BE USED ADJACENT TO A RAISED MEDIAN.

NOTES: MARKERS SHALL BE OFFSET 2" TO 3" FROM ADJACENT LINE MMARKING.

MARKERS SHALL BE LOCATED IN THE CENTER OF THE GAP BETWEEN SEGMENTS OF SKIP- DASH LINES.

MARKER SYMBOLS:

- ONE-WAY YELLOW
- TWO-WAY YELLOW
- ONE-WAY WHITE

NOT TO SCALE:

TYPICAL APPLICATION
RAISED REFLECTIVE PAVEMENT MARKERS
TMD-113A-1

TYPICAL APPROACH TO CHANNELIZED MEDIANS
(WHEN SPECIFIED)

NOT TO SCALE:

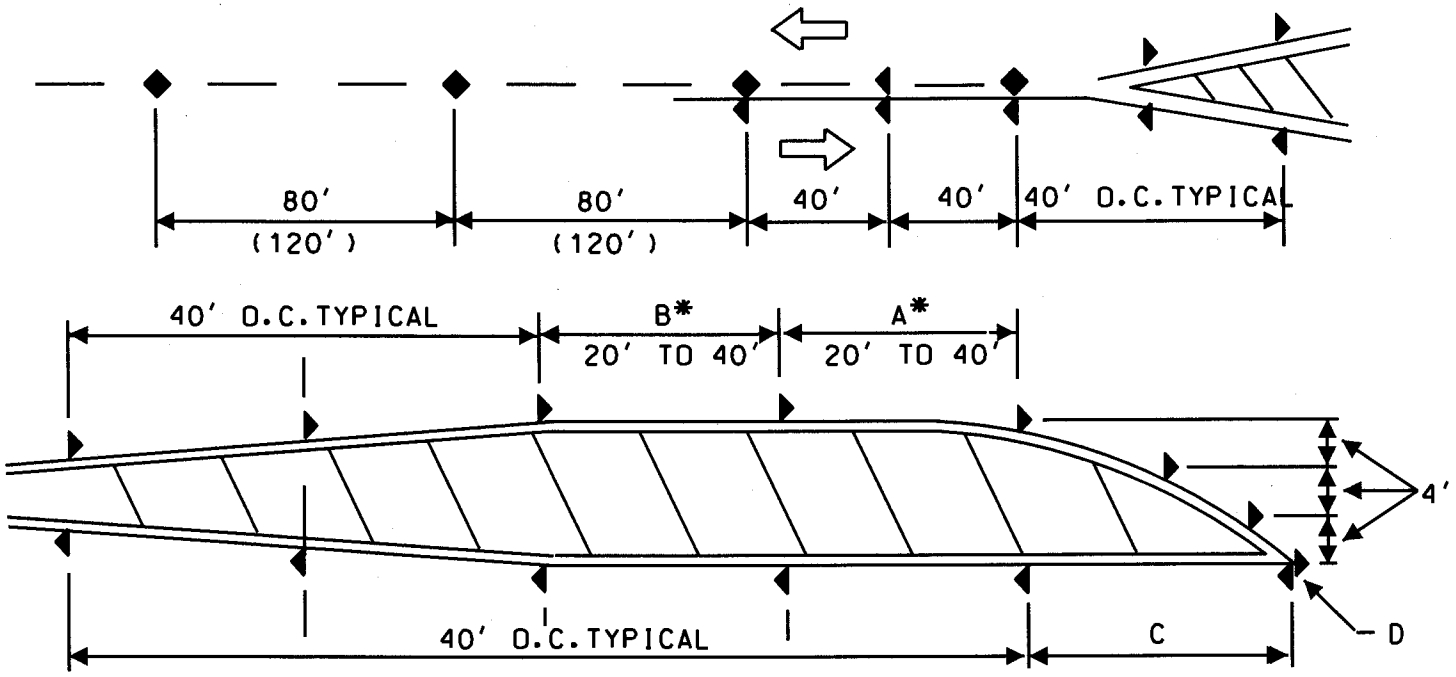

* ADJUSTMENTS TO THE NORMAL 40' O.C. SEQUENCE SHALL BE ACCOMPLISHED ONLY WITHIN A* AND B* AS SHOWN ABOVE. DEMENSION B* MUST BE EQUAL TO OR LONGER THAN DIMENSION A*.
MARKER D SHALL BE OMITTED IF DIMENSION C IS LESS THAN 40'.

NOTE: NOT MORE THAN TWO MAKERS ON ETHER SIDE SHALL BE USED ADJACENT TO A CONTINUOUS RAISED MEDIAN IN ADVANCE OF OR BEYOND THE TAPERED SECTION.

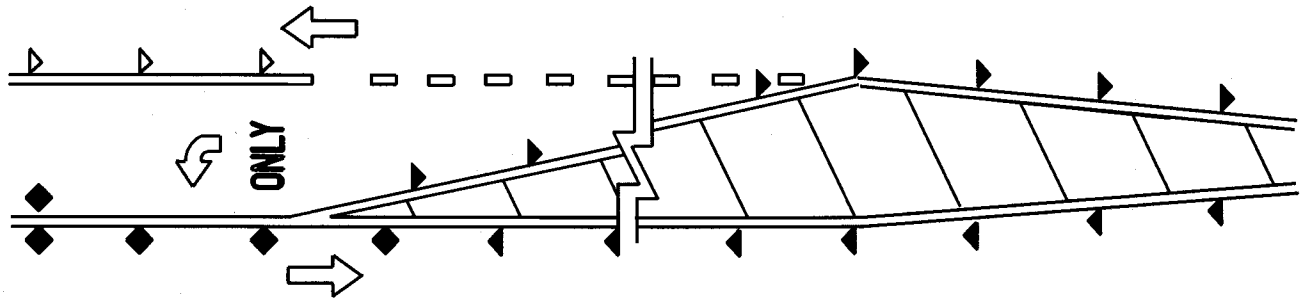

FOR KEY SYMBOLS AND DETAILS SEE TMD-113A.

NOT TO SCALE:

PAINTED CHANNELIZED

TYPICAL APPLICATION
RAISED REFLECTIVE PAVEMENT MARKERS
TMD-113B-2

COUNTY	FISCAL YEAR	SHEET NO.	TOTAL SHEETS
HIGHWAY			
	2004	8	8
SECTION			

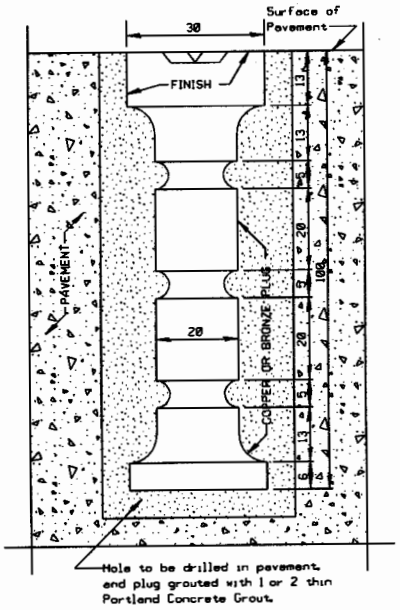

DETAIL FOR PLACING MONUMENT IN PAVEMENT

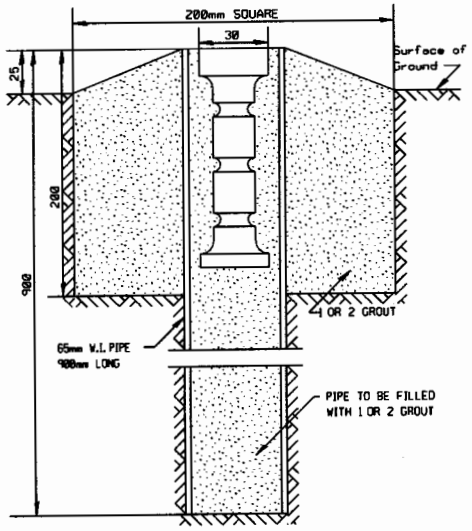

DETAIL FOR PLACING MONUMENT WHEN LOCATED OUTSIDE OF PAVEMENT

TOP OF MONUMENT

ALL DIMENSIONS ARE IN MILLIMETERS
UNLESS OTHERWISE SHOWN.

NOT TO SCALE

COUNTY OF COOK
DEPARTMENT OF
TRANSPORTATION AND HIGHWAYS

DETAIL
OF
SURVEY MONUMENT

COMPUTED G.A.P.
DRAWN G.A.S.
CHECK G.A.P.

COUNTY	FISCAL YEAR	SHEET NO.	TOTAL SHEETS
COOK	2014	2	2

SECTION: 13-01MPS-01-BR

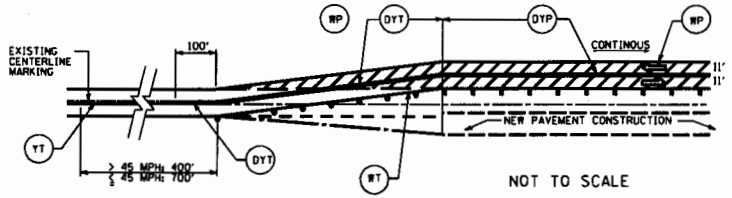

NOT TO SCALE

1 FIRST STAGE

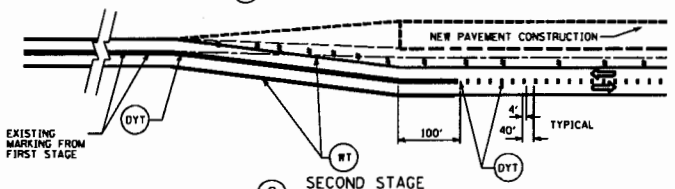

2 SECOND STAGE

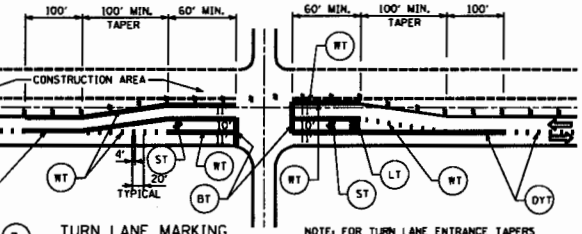

3 TURN LANE MARKING SECOND STAGE

NOTE: FOR TURN LANE ENTRANCE TAPERS LONGER THAN 175' SEE DETAIL ⑧

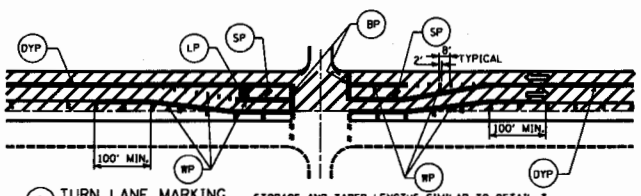

4 TURN LANE MARKING FIRST STAGE

STORAGE AND TAPER LENGTHS SIMILAR TO DETAIL 3

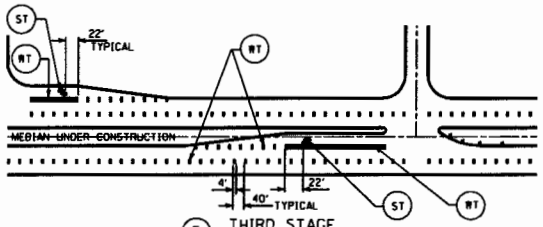

5 THIRD STAGE

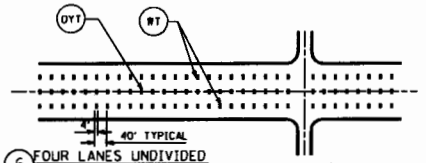

6 FOUR LANES UNDIVIDED

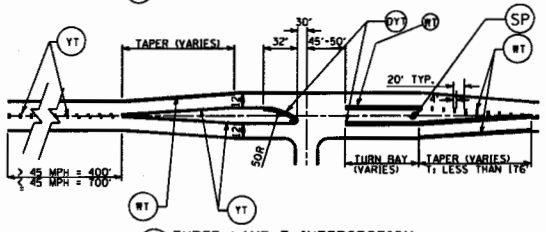

7 THREE LANE T INTERSECTION

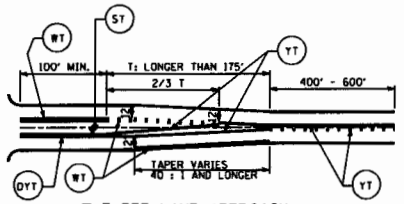

8 THREE LANE APPROACH

LEGEND

- TEMPORARY PAVEMENT
- FINAL PAVEMENT
- (BP) STOP BAR: 12" WIDE (MIN.) WHITE, WHERE REQUIRED
- (BT) STOP BAR: 3 - 4" WHITE TAPE LINES, WHERE REQUIRED
- (YT) YELLOW TAPE LINE - 4"
- (WT) WHITE TAPE LINE - 4"
- (DYT) DOUBLE YELLOW TAPE LINES- 2 @ 4", SPACED 11" MIN. C. TO C.
- (ST) ARROW SYMBOL(S) FORMED WITH 4" WHITE TAPE LINE
- (LT) LETTERS = "ONLY" FORMED WITH 4" WHITE TAPE LINE
- (RT) RAILROAD CROSSING LETTERS AND SYMBOL FORMED WITH 4" WHITE TAPE
- (YP) YELLOW PAINTED 4" LINE
- (WP) WHITE PAINTED 4" LINE
- (DYP) DOUBLE YELLOW PAINTED 4" LINES, 2 @ 4" WIDE SPACED 11" C. TO C.
- (SP) ARROW SYMBOL(S) PAINTED WHITE
- (LP) LETTERS = "ONLY" PAINTED WHITE

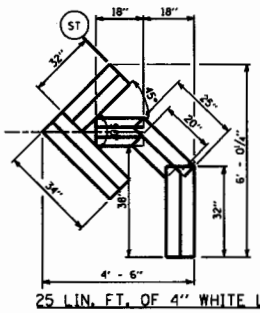

25 LIN. FT. OF 4" WHITE LINE

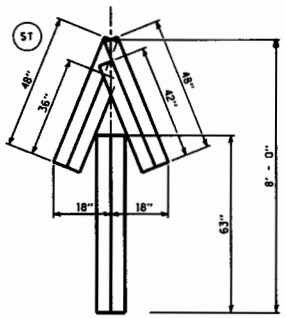

25 LIN. FT. OF 4" WHITE LINE

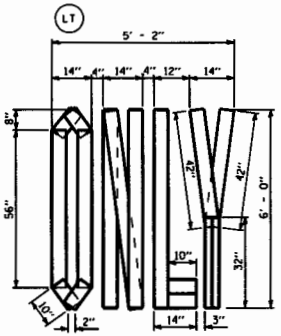

48 LIN. FT. OF 4" WHITE LINE

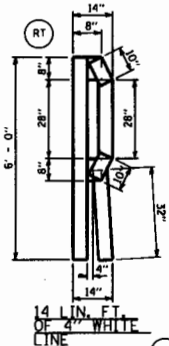

14 LIN. FT. OF 4" WHITE LINE

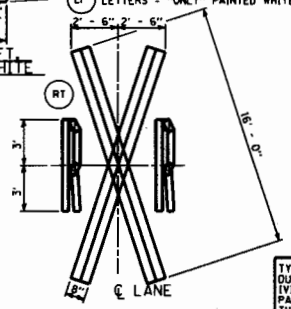

TEMPORARY LETTERS AND SYMBOLS FORMED WITH 4 INCH WIDE PAVEMENT MARKING TAPE

FOR PAINTED LETTERS AND SYMBOLS, SEE NOTE 4

"X" = 64 LIN. FT. OF 4" WHITE LINE

NOTES:

1. TEMPORARY MARKING FOR LANE CLOSURES AND BY-PASSES SHALL BE IN ACCORDANCE WITH TRAFFIC CONTROL STANDARD 701351, 701401, 701426, 701431 OR 701416, WHICHEVER IS APPLICABLE, AND WITH DETAILS ① THRU ④ ON THIS SHEET.
2. THE PAVEMENT MARKING WORD "ONLY", FOR TEMPORARY APPLICATIONS, SHALL ONLY BE REQUIRED WITH THE TURN ARROW IN A LANE WHERE THE MANDATORY MOVEMENT IS NOT READILY APPARENT DUE TO THE ALIGNMENT AND WHERE DIRECTED BY THE ENGINEER. SEE DETAILS ③ AND ④.
3. WHITE EDGELINES (4" WHITE TAPE OR PAINT AS APPROPRIATE) SHALL BE CONTINOUS IF REQUIRED IN THE JUDGEMENT OF THE ENGINEER.
4. TEMPORARY PAINTED ARROW SYMBOLS, WORDS AND ADVANCE RAILROAD CROSSING MARKINGS SHALL CONFORM WITH THE STANDARD DESIGN AS SHOWN IN THE MANUAL ON UNIFORM TRAFFIC CONTROL DEVICES. 6' LETTERS AND TURN ARROWS MAY BE USED WHERE SPEEDS THRU THE MARKED AREA DO NOT EXCEED 40 M. P. H.. QUANTITIES FOR THE PAINTED MARKINGS MAY BE DETERMINED FROM TABLE 500-1 IN SECTION 780 OF THE STANDARD SPECIFICATIONS.
5. REFER TO THE SIGNING AND FINAL MARKING PLANS FOR LOCATING TEMPORARY MARKINGS, RAILROAD APPROACHES, STOP LINES, CROSSWALKS, ETC.
6. REFER TO THE SPECIAL PROVISION FOR TRAFFIC PROTECTION.
7. WHERE THE ITEM: PAVEMENT MARKING TAPE, TYPE III - LETTERS AND SYMBOLS IS INCLUDED IN THE CONTRACT, THE DESIGN OF THE LETTERS AND ARROW SYMBOLS AND THE SQUARE FEET QUANTITIES FOR THIS ITEM SHALL BE THE SAME AS FOR PAINTED MARKINGS DESCRIBED IN NOTE 4.

TYPICAL TEMPORARY PAVEMENT MARKING APPLICATIONS DURING NORMAL CONSTRUCTION OR MAINTENANCE ACTIVITIES AND TRAFFIC GUIDANCE PRIOR TO PERMANENT PAVEMENT MARKING OPERATIONS.
THIS REFERENCE STANDARD IS NOT INTENDED AS A SUBSTITUTE FOR A SPECIFIC MAINTENANCE OF TRAFFIC PLAN FOR THIS PROJECT.
SEE THE CONSTRUCTION STAGING PLANS, TRAFFIC STANDARDS AND/OR PLAN GENERAL NOTES.

COUNTY OF COOK
DEPARTMENT OF TRANSPORTATION AND HIGHWAYS

STANDARD TTM-525
TYPICAL TEMPORAY PAVEMENT MARKING (ENGLISH)

DRAWN: GBL
CHECKED:

REVISED T-23-04 F.H.

COUNTY	FISCAL YEAR	SHEET NO.	TOTAL SHEETS
VARIOUS	2021	2	2
SECTION:			

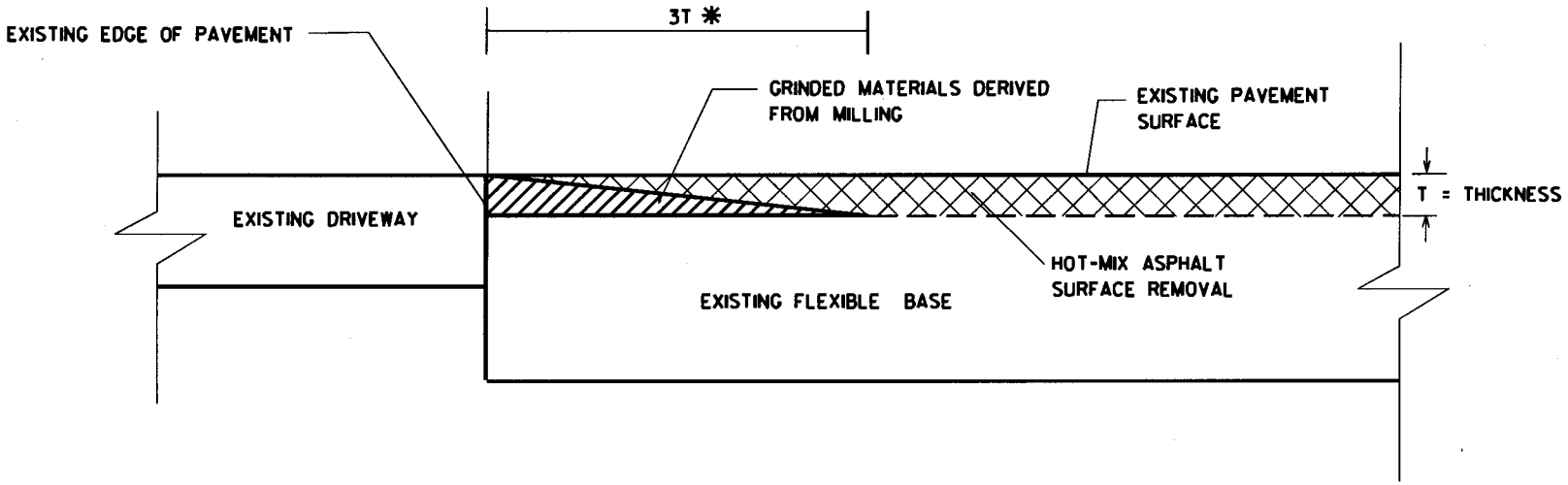

* LENGTH = 3T OR TO AS DETERMINED BY THE RESIDENT ENGINEER

TEMPORARY RAMP AT DRIVEWAY

DURING HOT-MIX ASPHALT SURFACE REMOVAL

NOT TO SCALE

COUNTY OF CLEAR
DEPARTMENT OF HIGHWAYS
TEMPORARY RAMP AT DRIVEWAY DETAIL

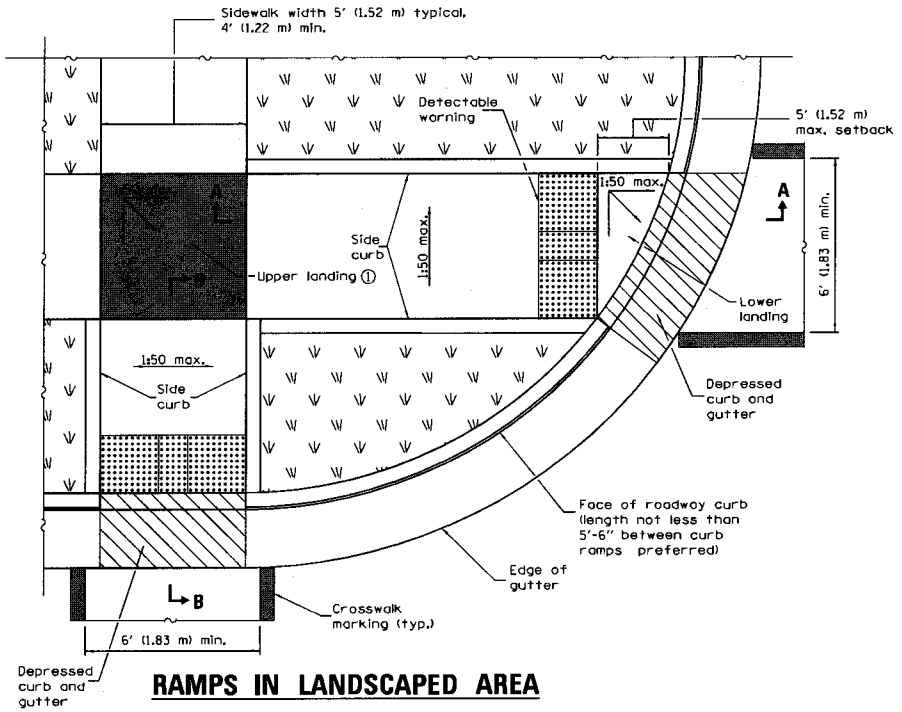

RAMPS IN LANDSCAPED AREA
SETBACK ≤ 5'

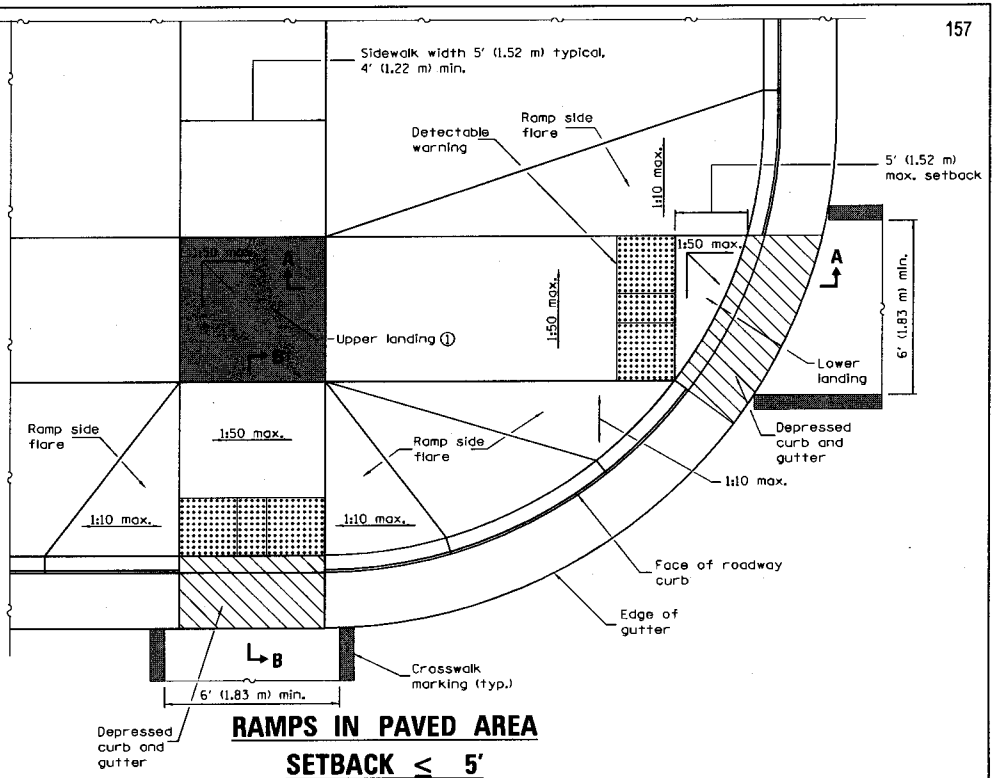

RAMPS IN PAVED AREA
SETBACK ≤ 5'

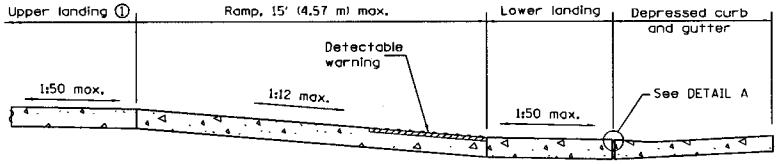

SECTION A–A

① Upper landing not required for ramp slopes flatter than 1:20.

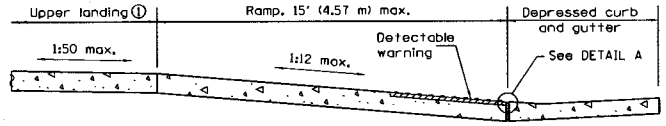

SECTION B–B

① Upper landing not required for ramp slopes flatter than 1:20.

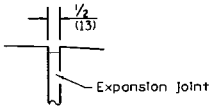

DETAIL A

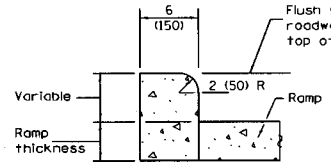

SIDE CURB DETAIL

GENERAL NOTES

All slope ratios are expressed as units of vertical displacement to units of horizontal displacement (V:H).

Where 1:50 maximum slope is shown, 1:64 is preferred.

See Standard 606001 for details of depressed curb adjacent to curb ramp.

All dimensions are in inches (millimeters) unless otherwise shown.

Illinois Department of Transportation

PASSED January 1, 2013
ENGINEER OF POLICY AND PROCEDURES
APPROVED January 1, 2013
ENGINEER OF DESIGN AND ENVIRONMENT

ISSUED 1-1-07

DATE	REVISIONS
1-1-13	Widened crosswalk markings
	to 6' (1.83 m) min. inside
	dimension. Rev. Gen. Notes.
1-1-12	Completely revised and
	renamed standard.

PERPENDICULAR CURB RAMPS FOR SIDEWALKS

(Sheet 1 of 2)

STANDARD 424001-07

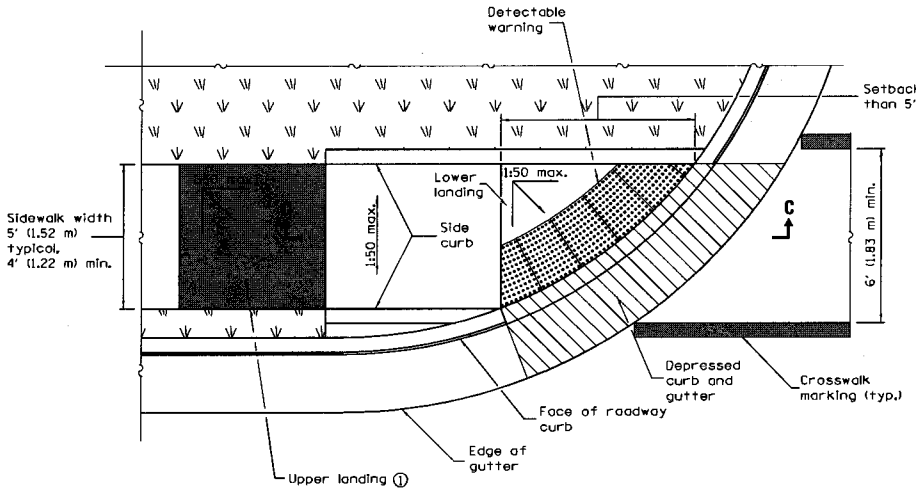

RAMP IN LANDSCAPED AREA
SETBACK > 5'

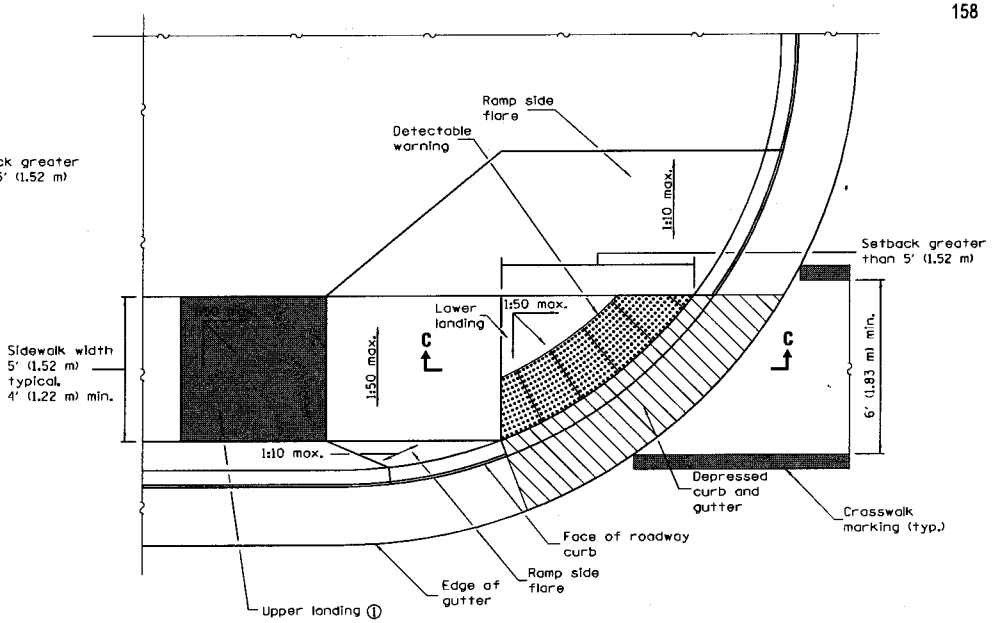

RAMP IN PAVED AREA
SETBACK > 5'

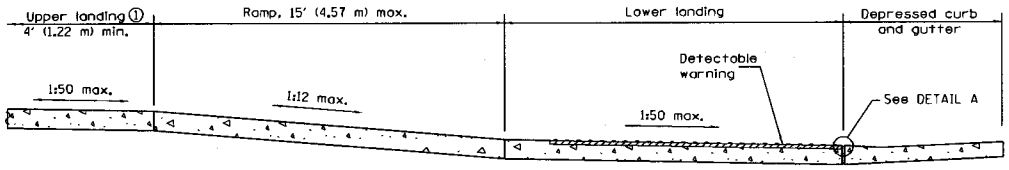

SECTION C–C

① Upper landing not required for ramp slopes flatter than 1:20.

Illinois Department of Transportation

PASSED January 1, 2013
ENGINEER OF POLICY AND PROCEDURES
APPROVED January 1, 2013
ENGINEER OF DESIGN AND ENVIRONMENT

ISSUED 1-1-97

PERPENDICULAR CURB RAMPS FOR SIDEWALKS

(Sheet 2 of 2)

STANDARD 424001-07

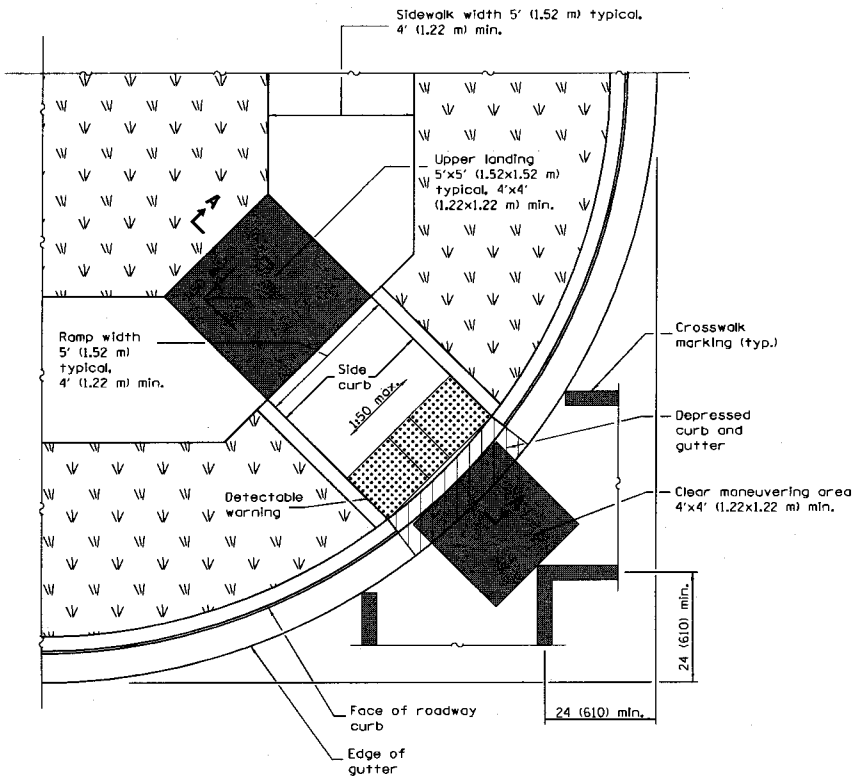

RAMP IN LANDSCAPED AREA

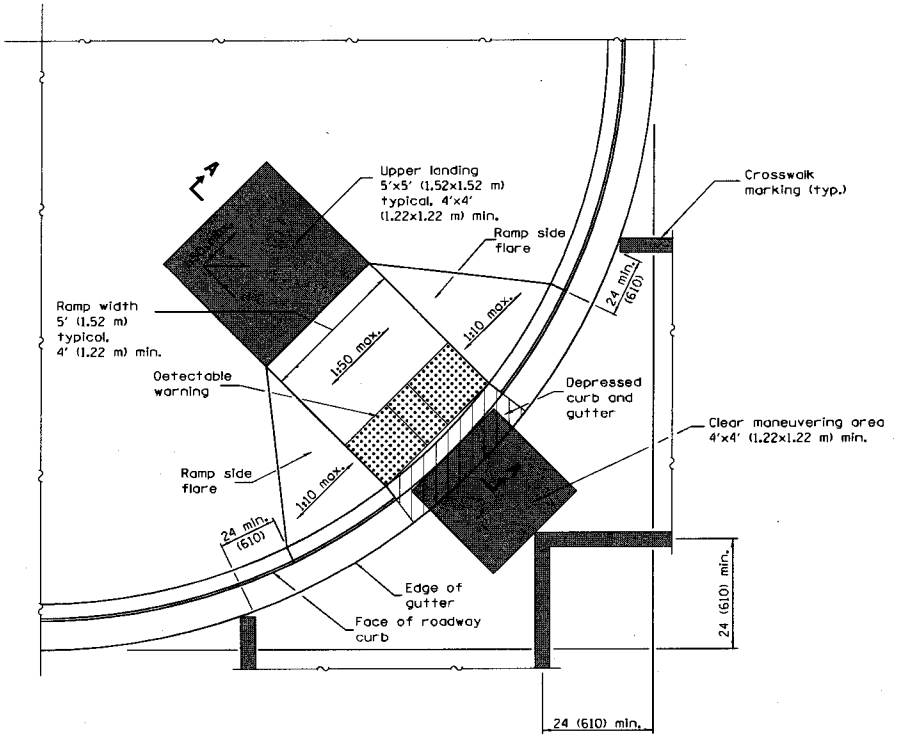

RAMP IN PAVED AREA

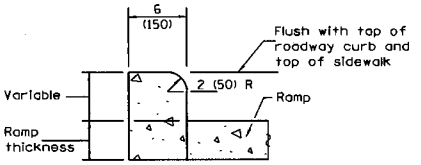

SIDE CURB DETAIL

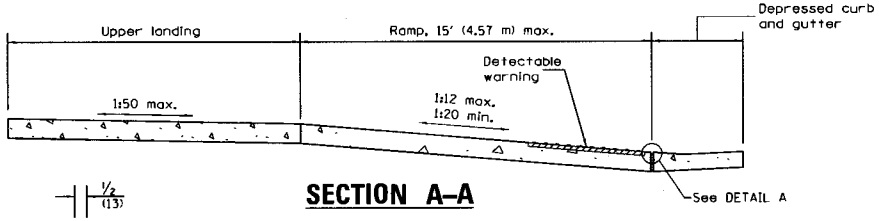

SECTION A–A

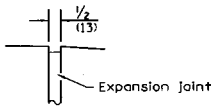

DETAIL A

GENERAL NOTES

This Standard shall only be used for curb radii of 20 ft. (6.1 m) or greater.

Where 1:50 maximum slope is shown, 1:64 is preferred.

All slope ratios are expressed as units of vertical displacement to units of horizontal displacement (V:H).

See Standard 606001 for details of depressed curb adjacent to curb ramp.

All dimensions are in inches (millimeters) unless otherwise shown.

Illinois Department of Transportation

PASSED January 1, 2013
ENGINEER OF POLICY AND PROCEDURES
APPROVED January 1, 2013
ENGINEER OF DESIGN AND ENVIRONMENT

ISSUED 1-1-12

DATE	REVISIONS
1-1-13	Revised General Notes.
1-1-12	New standard.

DIAGONAL CURB RAMPS FOR SIDEWALKS

STANDARD 424006-01

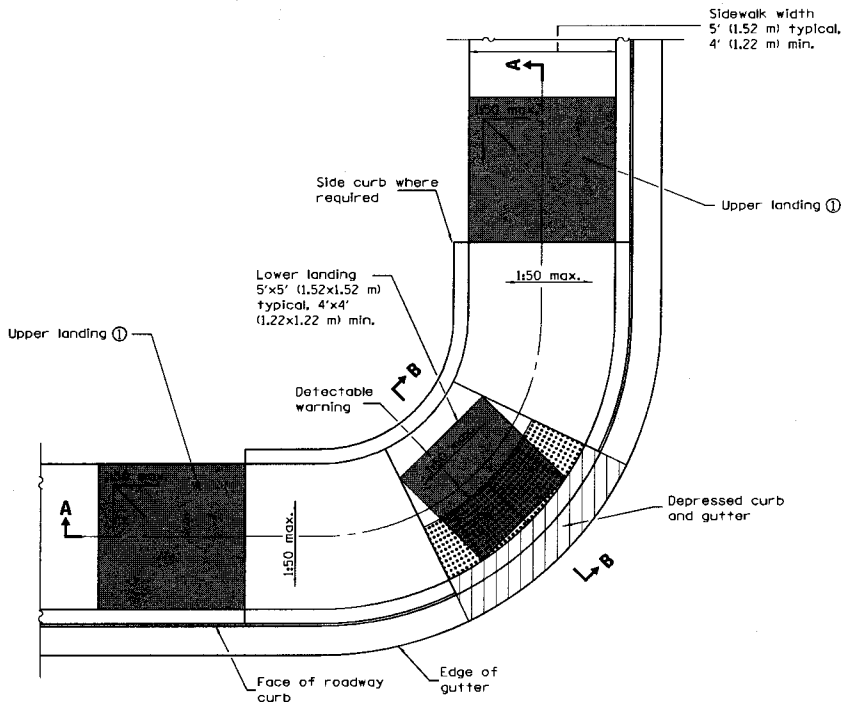

CORNER PARALLEL CURB RAMP

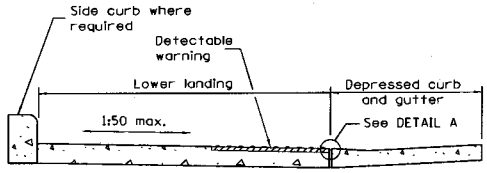

SECTION B–B

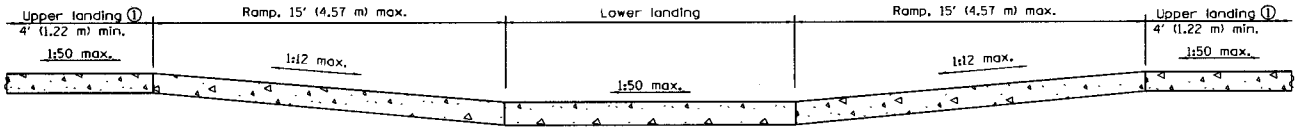

SECTION A–A

① Upper landing(s) not required for ramp slopes flatter than 1:20.

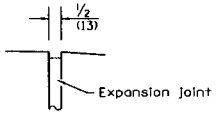

DETAIL A

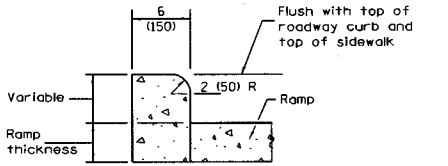

SIDE CURB DETAIL

GENERAL NOTES

All slope ratios are expressed as units of vertical displacement to units of horizontal displacement (V:H).

Where 1:50 maximum slope is shown, 1:64 is preferred.

See Standard 606001 for details of depressed curb adjacent to curb ramp.

All dimensions are in inches (millimeters) unless otherwise shown.

Illinois Department of Transportation

PASSED January 1, 2013
ENGINEER OF POLICY AND PROCEDURES
APPROVED January 1, 2013
ENGINEER OF DESIGN AND ENVIRONMENT

ISSUED 1-1-12

DATE	REVISIONS
1-1-13	Revised General Notes.
1-1-12	New standard.

CORNER PARALLEL CURB RAMPS FOR SIDEWALKS

STANDARD 424011–01

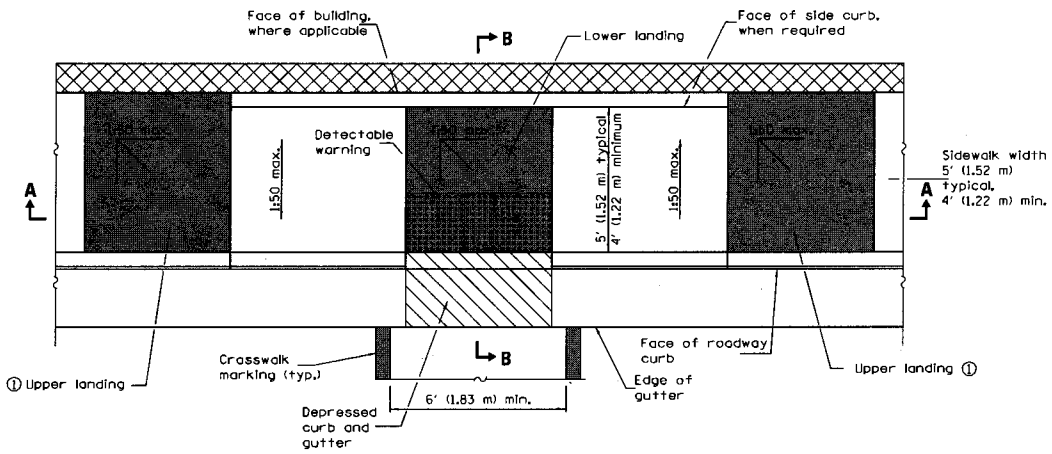

PARALLEL MID-BLOCK CURB RAMP

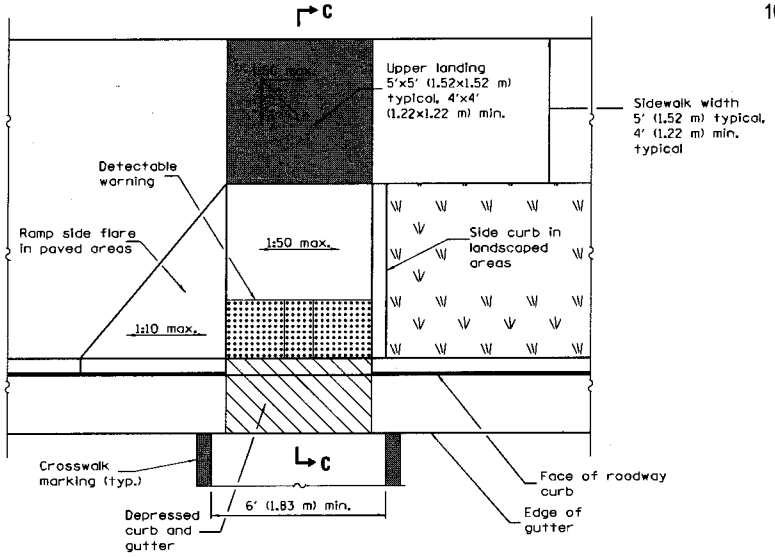

PERPENDICULAR MID-BLOCK CURB RAMP

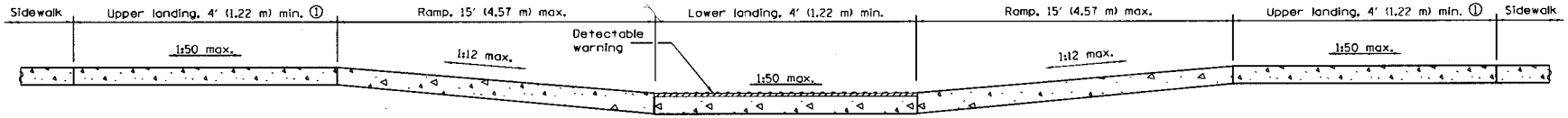

SECTION A-A

① Upper landing(s) not required for ramp slopes flatter than 1:20.

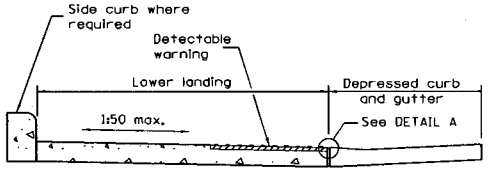

SECTION B-B

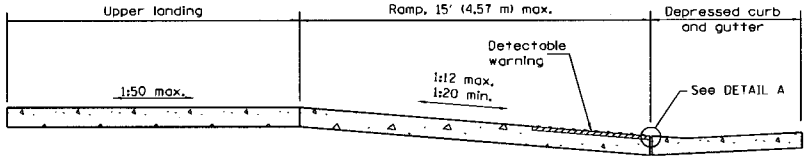

SECTION C-C

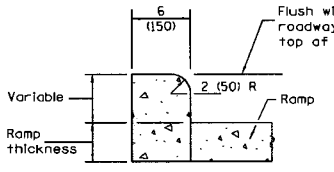

SIDE CURB DETAIL

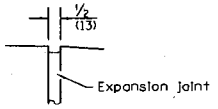

DETAIL A

GENERAL NOTES

All slope ratios are expressed as units of vertical displacement to units of horizontal displacement (V:H).

Where 1:50 maximum slope is shown, 1:64 is preferred.

See Standard 606001 for details of depressed curb adjacent to curb ramp.

All dimensions are in inches (millimeters) unless otherwise shown.

Illinois Department of Transportation

PASSED January 1, 2013
ENGINEER OF POLICY AND PROCEDURES
APPROVED January 1, 2013
ENGINEER OF DESIGN AND ENVIRONMENT
ISSUED 1-1-12

DATE	REVISIONS
1-1-13	Widened crosswalk markings
	to 6' (1.83 m) min. inside
	dimension. Rev. Gen. Notes.
1-1-12	New standard.

MID-BLOCK CURB RAMPS FOR SIDEWALKS

STANDARD 424016-01

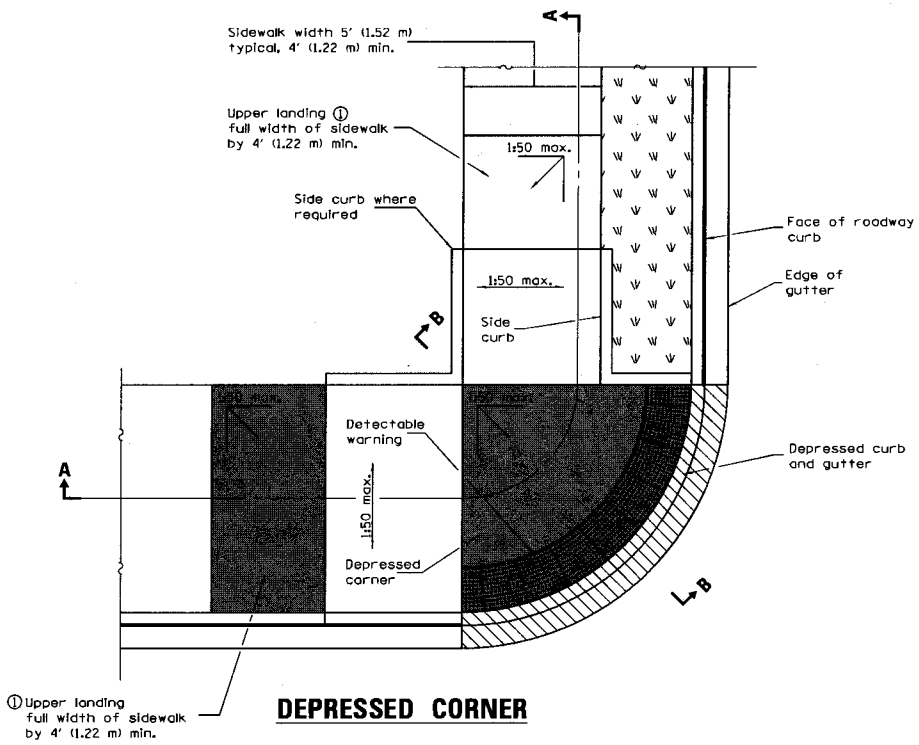

DEPRESSED CORNER

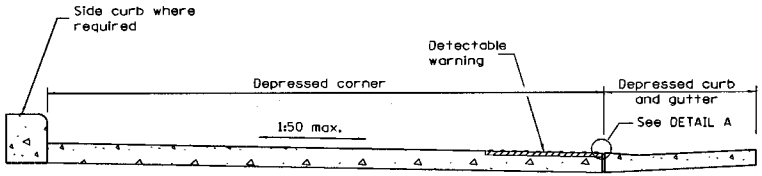

SECTION B–B

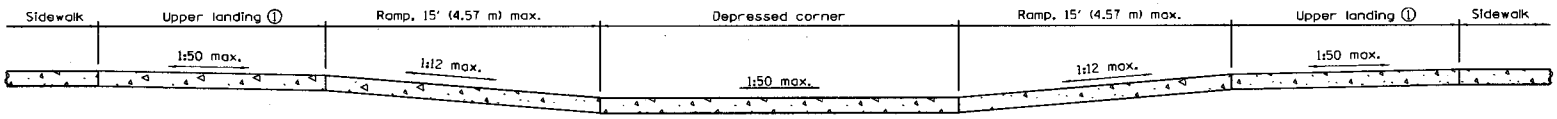

SECTION A–A

① Upper landing(s) not required for ramp slopes flatter than 1:20.

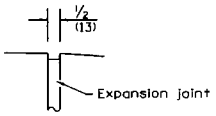

DETAIL A

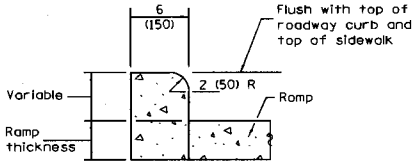

SIDE CURB DETAIL

GENERAL NOTES

This standard shall only be used for curb radii of 6 ft. (1.83 m) or greater.

All slope ratios are expressed as units of vertical displacement to units of horizontal displacement (V:H).

Where 1:50 maximum slope is shown, 1:64 is preferred.

See Standard 606001 for details of depressed curb adjacent to curb ramp.

All dimensions are in inches (millimeters) unless otherwise shown.

Illinois Department of Transportation

PASSED January 1, 2014
ENGINEER OF POLICY AND PROCEDURES
APPROVED January 1, 2014
ENGINEER OF DESIGN AND ENVIRONMENT

ISSUED 1-1-13

DATE	REVISIONS
1-1-14	Revised sidewalk width.
	Revised gen. notes to limit curb rad. to 6' (1.83 m) min.
1-1-13	Revised General Notes.

DEPRESSED CORNER FOR SIDEWALKS

STANDARD 424021–02

② Detectable warning shall only be installed at entrances/alleys with permanent traffic control devices (i.e. stop signs, signals).

③ Where possible, maintain the grade of the sidewalk across the entrance/alley to avoid the need for ramps and upper landings.

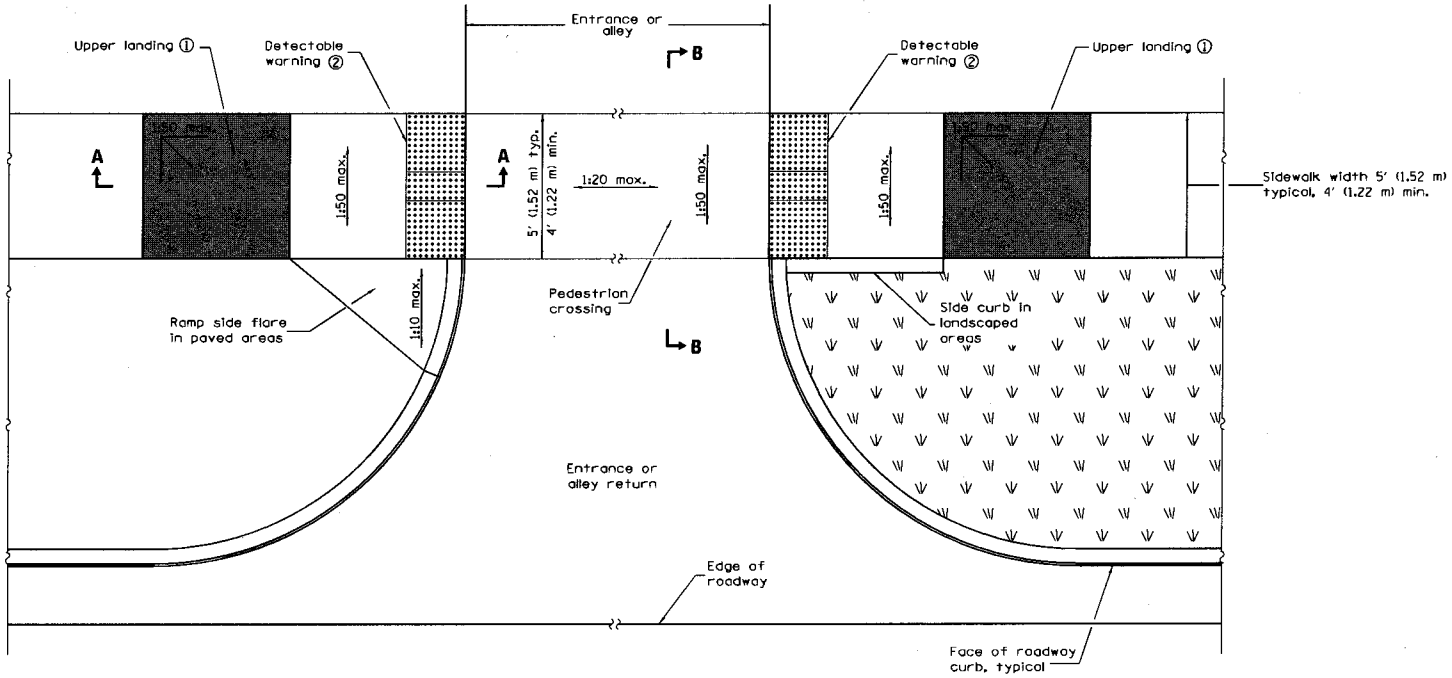

ENTRANCE /ALLEY PEDESTRIAN CROSSING

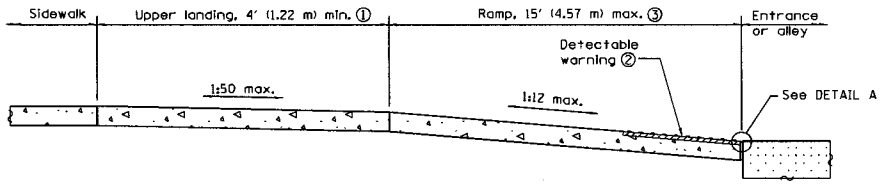

SECTION A–A

① Upper landing not required for ramp slopes flatter than 1:20.

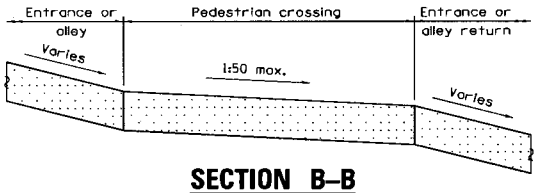

SECTION B–B

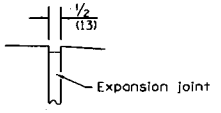

DETAIL A

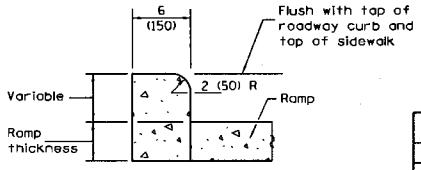

SIDE CURB DETAIL

GENERAL NOTES

All slope ratios are expressed as units of vertical displacement to units of horizontal displacement (V:H).

Where 1:50 maximum slope is shown, 1:64 is preferred.

All dimensions are in inches (millimeters) unless otherwise shown.

Illinois Department of Transportation

PASSED January 1, 2013
ENGINEER OF POLICY AND PROCEDURES
APPROVED January 1, 2013
ENGINEER OF DESIGN AND ENVIRONMENT

ISSUED 1-1-12

DATE	REVISIONS
1-1-13	Revised General Notes.
1-1-12	New standard.

ENTRANCE / ALLEY PEDESTRIAN CROSSINGS

STANDARD 424026-01

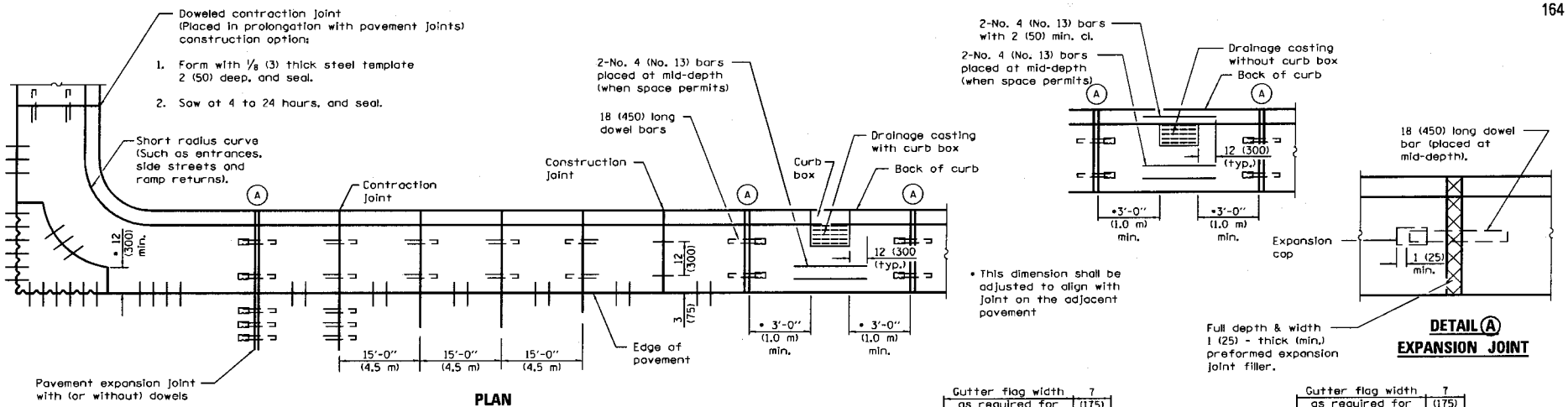

• This dimension shall be adjusted to align with joint on the adjacent pavement

PLAN
ADJACENT TO PCC PAVEMENT OR PCC BASE COURSE

DETAIL (A)
EXPANSION JOINT

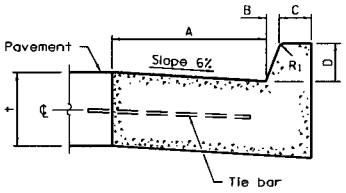

BARRIER CURB

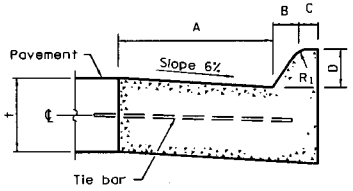

MOUNTABLE CURB

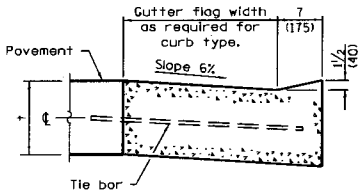

DEPRESSED CURB (TYPICAL)

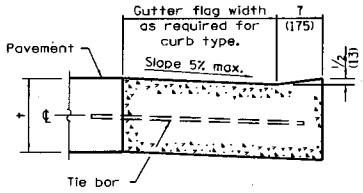

DEPRESSED CURB ADJACENT TO CURB RAMP ACCESSIBLE TO THE DISABLED

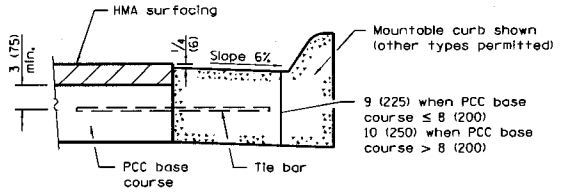

ADJACENT TO PCC BASE COURSE WITH HMA SURFACING

TABLE OF DIMENSIONS BARRIER CURB					
TYPE	A	B	C	D	R_1
B-6.12 (B-15.3)	12 (300)	1 (25)	6 (150)	6 (150)	1 (25)
B-6.18 (B-15.45)	18 (450)	1 (25)	6 (150)	6 (150)	1 (25)
B-6.24 (B-15.60)	24 (600)	1 (25)	6 (150)	6 (150)	1 (25)
B-9.12 (B-22.30)	12 (300)	2 (50)	5 (125)	9 (225)	1 (25)
B-9.18 (B-22.45)	18 (450)	2 (50)	5 (125)	9 (225)	1 (25)
B-9.24 (B-22.60)	24 (600)	2 (50)	5 (125)	9 (225)	1 (25)

TABLE OF DIMENSIONS MOUNTABLE CURB						
TYPE	A	B	C	D	R_1	R_2
M-2.06 (M-5.15)	6 (150)	2 (50)	4 (100)	2 (50)	3 (75)	2 (50)
M-2.12 (M-5.30)	12 (300)	2 (50)	4 (100)	2 (50)	3 (75)	2 (50)
M-4.06 (M-10.15)	6 (150)	4 (100)	3 (75)	4 (100)	3 (75)	NA
M-4.12 (M-10.30)	12 (300)	4 (100)	3 (75)	4 (100)	3 (75)	NA
M-4.18 (M-10.45)	18 (450)	4 (100)	3 (75)	4 (100)	3 (75)	NA
M-4.24 (M-10.60)	24 (600)	4 (100)	3 (75)	4 (100)	3 (75)	NA
M-6.06 (M-15.15)	6 (150)	6 (150)	2 (50)	6 (150)	2 (50)	NA
M-6.12 (M-15.30)	12 (300)	6 (150)	2 (50)	6 (150)	2 (50)	NA
M-6.18 (M-15.45)	18 (450)	6 (150)	2 (50)	6 (150)	2 (50)	NA
M-6.24 (M-15.60)	24 (600)	6 (150)	2 (50)	6 (150)	2 (50)	NA

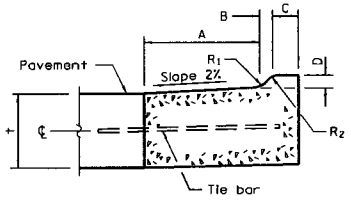

M-2.06 (M-5.15) and M-2.12 (M-5.30)

GENERAL NOTES

The bottom slope of combination curb and gutter constructed adjacent to pcc pavement shall be the some slope as the subbase or 6% when subbase is omitted.

t = Thickness of pavement.

Longitudinal joint tie bars shall be No. 6 (No. 19) at 24 (600) centers in accordance with details for longitudinal construction joint shown on Standard 420001.

A minimum clearance of 2 (50) between the end of the tie bar and the back of the curb shall be maintained.

The dowel bars shown in contraction joints will only be required for monolithic construction.

All dimensions are in inches (millimeters) unless otherwise shown.

Illinois Department of Transportation

PASSED January 1, 2013
ENGINEER OF POLICY AND PROCEDURES
APPROVED January 1, 2013
ENGINEER OF DESIGN AND ENVIRONMENT
ISSUED 1-1-97

DATE	REVISIONS
1-1-13	Added general note
	regarding requirement
	for dowel bars.
1-1-09	Switched units to
	English (metric).

CONCRETE CURB TYPE B AND COMBINATION CONCRETE CURB AND GUTTER

(Sheet 1 of 2)

STANDARD 606001-05

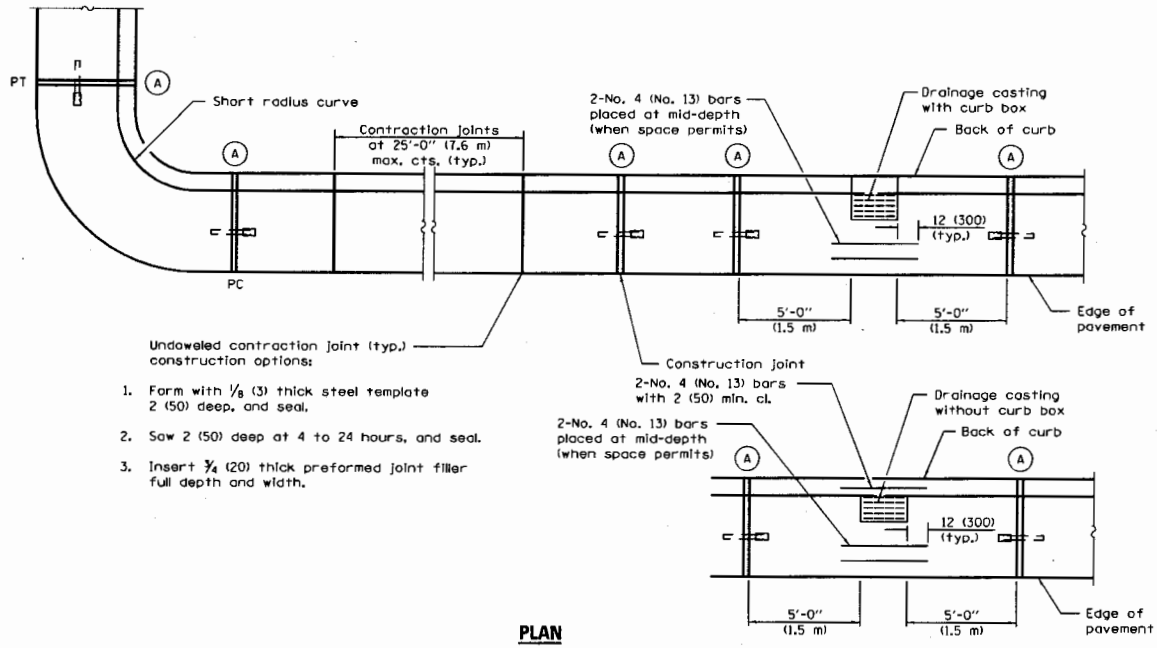

PLAN

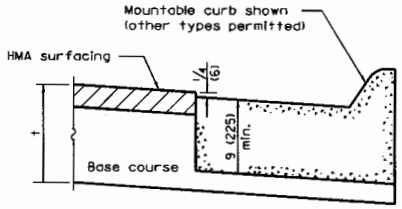

ON DISTURBED SUBGRADE

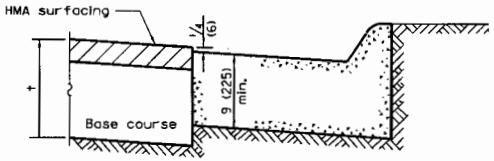

ON UNDISTURBED SUBGRADE

ADJACENT TO FLEXIBLE PAVEMENT

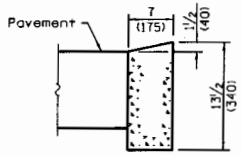

DEPRESSED CURB

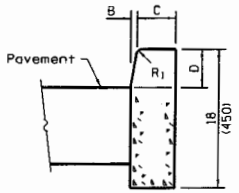

BARRIER CURB

ADJACENT TO FLEXIBLE PAVEMENT

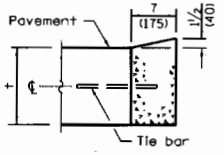

DEPRESSED CURB

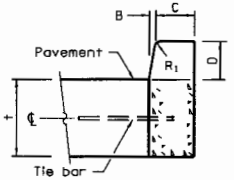

BARRIER CURB

ADJACENT TO PCC PAVEMENT OR PCC BASE COURSE

CONCRETE CURB TYPE B

Illinois Department of Transportation

PASSED January 1, 2013
Michael Brand
ENGINEER OF POLICY AND PROCEDURES
APPROVED January 1, 2013
ENGINEER OF DESIGN AND ENVIRONMENT

ISSUED 1-1-97

CONCRETE CURB TYPE B AND COMBINATION CONCRETE CURB AND GUTTER

(Sheet 2 of 2)

STANDARD 606001-05

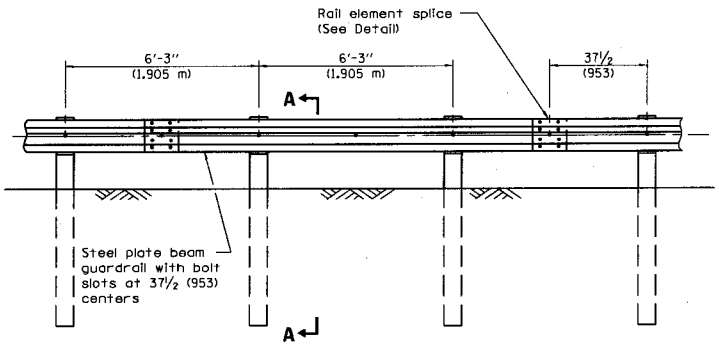

ELEVATION

TYPE A

6'-3" (1.905 m) Typical post spacing

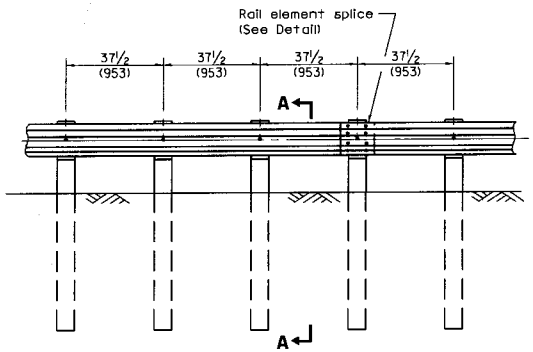

ELEVATION

TYPE B

37½ (953) Closed post spacing

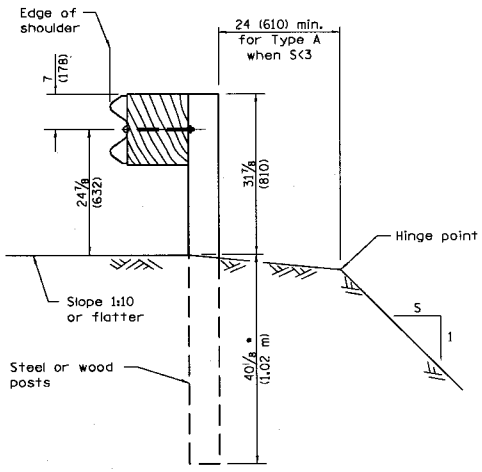

SECTION A–A

• When "S" is less than 3 and the distance from the back of post is less than 24 (610), the post shall be steel and the embedment shall be 76⅛ (1934).

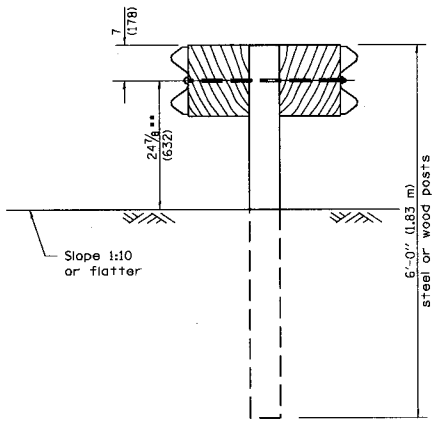

SECTION B–B

•• When connecting Type D guardrail to an impact attenuator, adjust this dimension to 21⅞ (556) over a distance of 25'-0" (7.62 m) from point of connection.

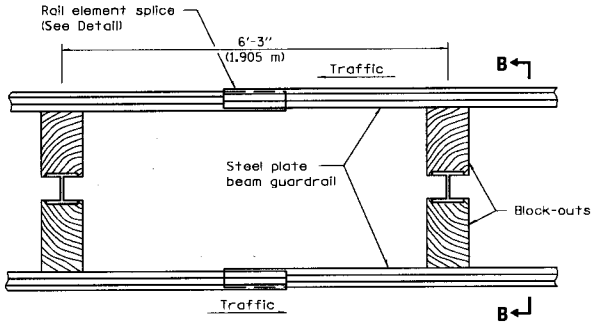

PLAN

TYPE D

Double steel plate beam guardrail
6'-3" (1.905 m) typical post spacing

GENERAL NOTES

All slope ratios are expressed as units of vertical displacement to units of horizontal displacement (V:H).

All dimensions are in inches (millimeters) unless otherwise shown.

Illinois Department of Transportation

PASSED January 1, 2012
ENGINEER OF POLICY AND PROCEDURES
APPROVED January 1, 2012
ENGINEER OF DESIGN AND ENVIRONMENT
ISSUED 1-1-12

DATE	REVISIONS
1-1-12	Added req. for 9 ft. posts
	to be steel. Modified set
	back of g'rail behind curb.
1-1-11	Added note to Section B-B
	for conn. to Impact att.
	Revised table on Sheet 4.

STEEL PLATE BEAM GUARDRAIL

(Sheet 1 of 4)

STANDARD 630001-10

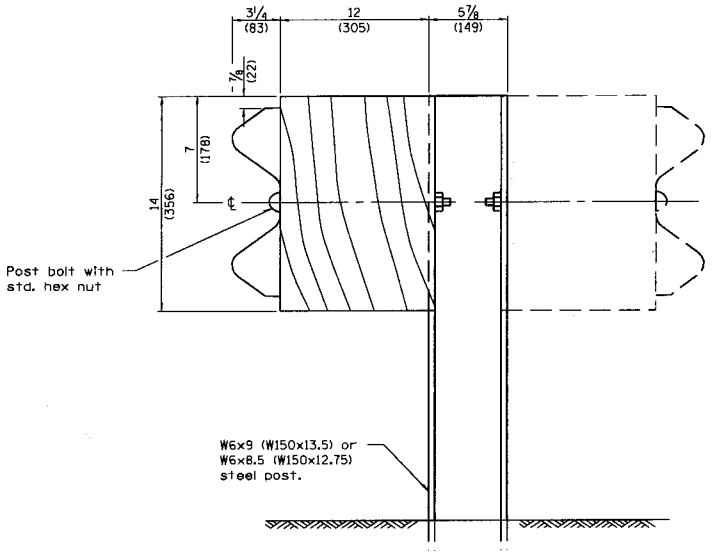

STEEL POST CONSTRUCTION

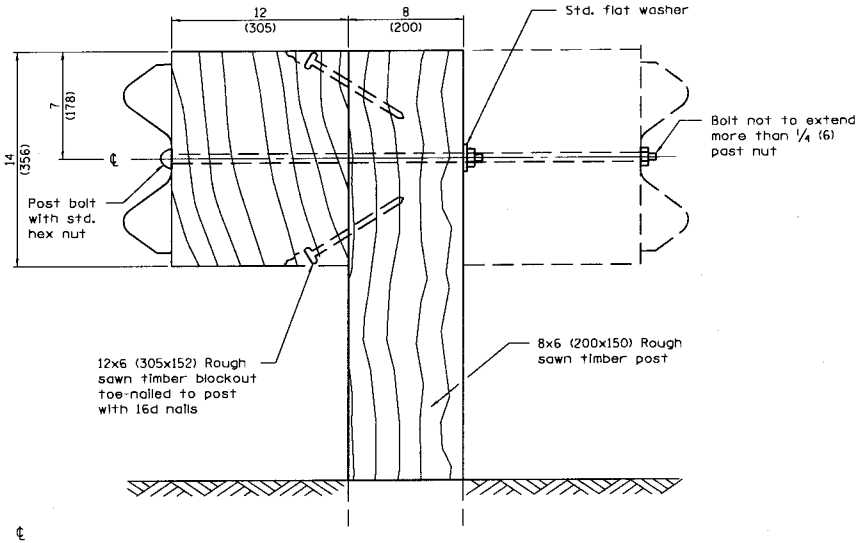

WOOD POST CONSTRUCTION

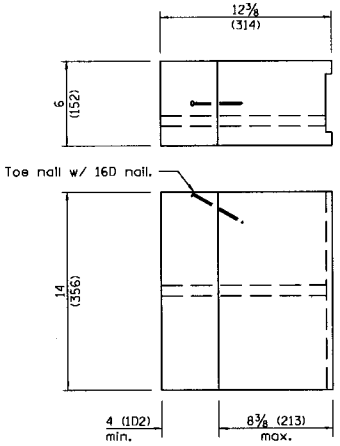

TWO-PIECE WOOD BLOCKOUT OPTION

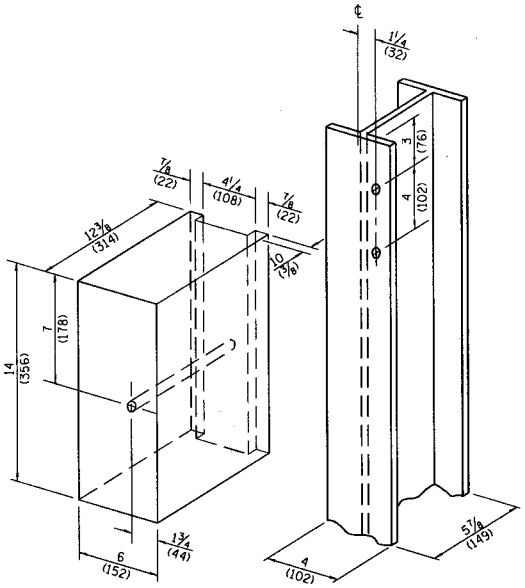

Note:
All holes ¾ (20) dia.

WOOD BLOCK-OUT AND STEEL POST DETAILS

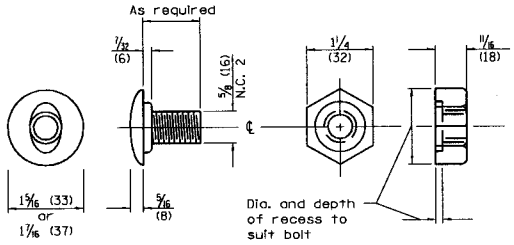

POST OR SPLICE BOLT & NUT

Illinois Department of Transportation

PASSED January 1, 2012
ENGINEER OF POLICY AND PROCEDURES
APPROVED January 1, 2012
ENGINEER OF DESIGN AND ENVIRONMENT

ISSUED 1-1-97

STEEL PLATE BEAM GUARDRAIL

(Sheet 2 of 4)

STANDARD 630001-10

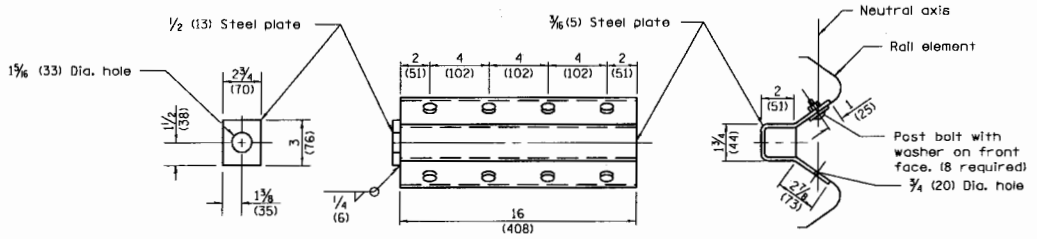

NOTE
Anchor plate T shall be used to attach cable assembly to guardrail when required on traffic barrier terminals.

ANCHOR PLATE T DETAILS

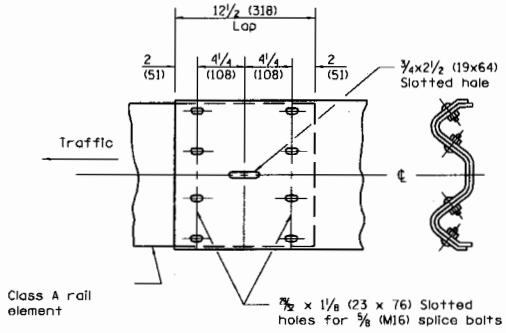

RAIL ELEMENT SPLICE

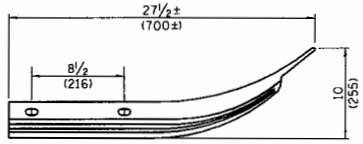

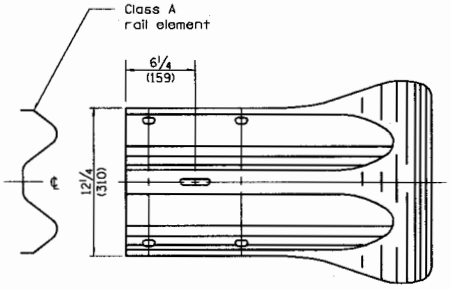

END SECTION

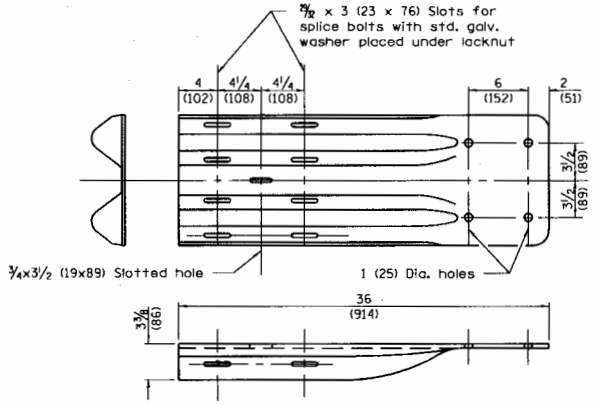

NOTE
When end shoe is attached to a bridge parapet which has an expansion joint, the bolts shall be provided with a locknut or double nut and shall be tightened only to a point that will allow guardrail movement.

The standard end shoe shall be attached to the concrete with pre-drilled or self-drilling anchor bolts. The anchor cone shall be set flush with the surface of the concrete.

Externally threaded studs protruding from the surface of the concrete will not be permitted.

END SHOE

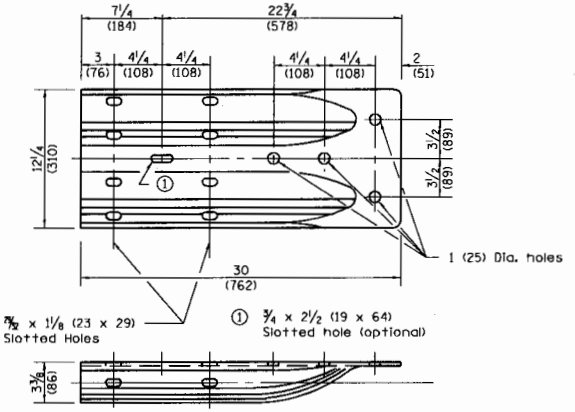

ALTERNATE END SHOE

Illinois Department of Transportation

PASSED January 1, 2012
ENGINEER OF POLICY AND PROCEDURES
APPROVED January 1, 2012
ENGINEER OF DESIGN AND ENVIRONMENT

ISSUED 1-1-97

STEEL PLATE BEAM GUARDRAIL

(Sheet 3 of 4)

STANDARD 630001-10

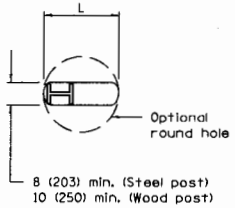

PLAN

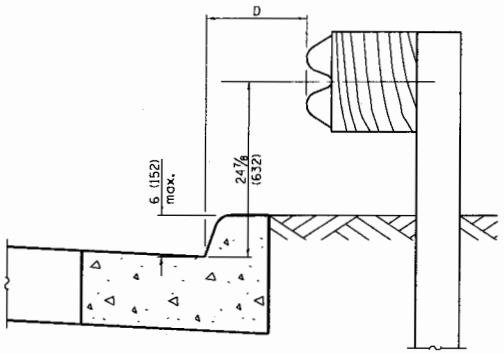

0 ≤ D < 4'–0" (1.2 m)

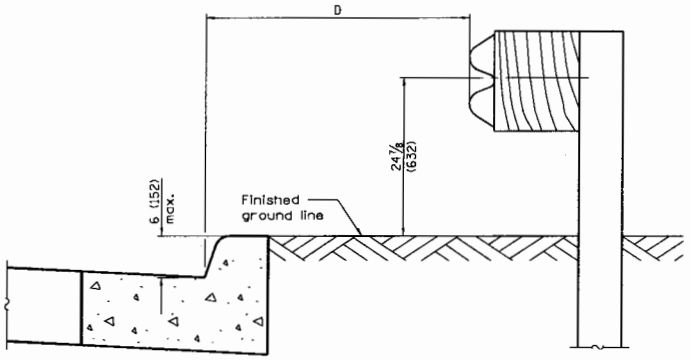

4'–0" (1.2 m) ≤ D ≤ 12'–0" (3.7 m)

GUARDRAIL PLACED BEHIND CURB

Note: 'D' shall not exceed 6 (152) for design speeds greater than 45 mph.

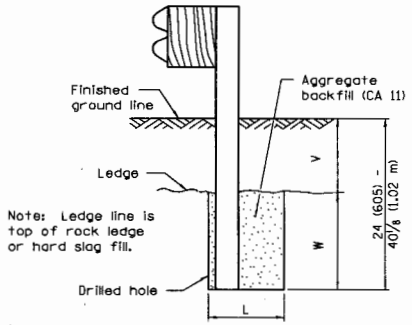

ELEVATION

FOOTING FOR POST WHEN IMPERVIOUS MATERIAL IS ENCOUNTERED

V	W	L	
		Steel Post	Wood Post
0 - 6 (0 - 152)	24 (610)	21 (530)	23 (580)
> 6 - 18 (> 152 - 458)	18 (458)	14½ (368)	16½ (419)
> 18 - 31 (> 458 - 787)	12 (305)	8 (203)	10 (250)
> 31 - 40⅛ (> 787 - 1.02 m)	12 - 0 (305 - 0)	8 (203)	10 (250)

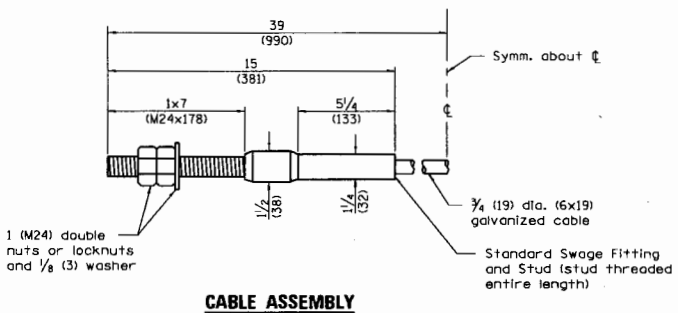

CABLE ASSEMBLY

(40,000 lbs. (18,100 kg) min. breaking strength)
Tighten to taut tension.

Illinois Department of Transportation

PASSED January 1, 2012
ENGINEER OF POLICY AND PROCEDURES
APPROVED January 1, 2012
ENGINEER OF DESIGN AND ENVIRONMENT

ISSUED 1-1-12

STEEL PLATE BEAM GUARDRAIL

(Sheet 4 of 4)

STANDARD 630001–10

OFFSETS TO FACE OF RAIL		
Post	X ft (m)	Y ft (m)
①	37.22 (11.345)	4.0 (1.22)
②	31.09 (9.475)	2.79 (0.850)
③	24.92 (7.595)	1.79 (0.545)
④	20.79 (6.335)	1.25 (0.380)
⑤	16.64 (5.070)	0.80 (0.245)
⑥	12.49 (3.805)	0.45 (0.135)
⑦	6.25 (1.905)	0.11 (0.035)
⑧	0.00 (0.00)	0.00 (0.00)

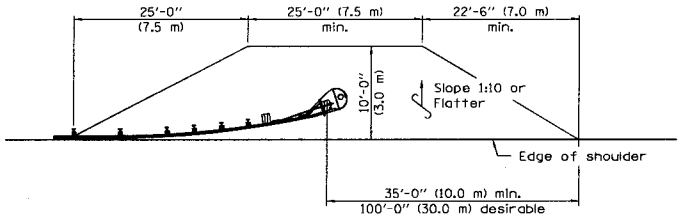

SHOULDER WIDENING TRANSITION

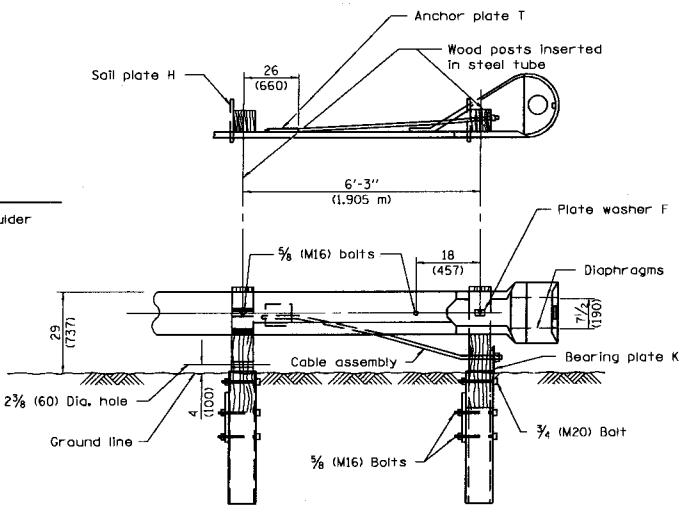

WOOD BREAKAWAY POSTS
TUBULAR STEEL FOUNDATIONS

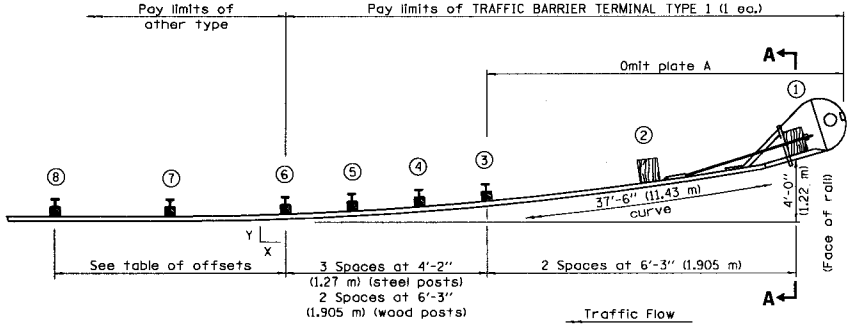

PLAN

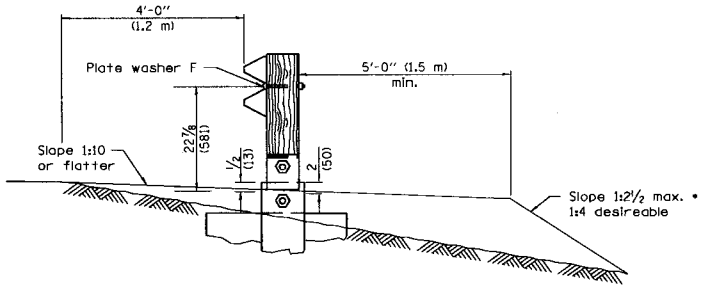

SECTION A–A

• If fill height exceeds 5'-0" (1.5 m) use 1:3 max.

GENERAL NOTES

See Standard B.L.R. 26 for details of guardrail not shown.

Posts at location 1 & 2 shall be wood breakaway posts. Posts other than 1 & 2 may be either standard wood posts or steel posts, at the option of the Contractor. If standard wood posts are used, one post shall be located midway between and in lieu of posts 4 & 5. The offset (Y) for this post shall be 12 (300).

A two-piece assembly may be substituted for the one piece nose shown above.

The bearing plate K shall be held in position by (2) two eightpenny nails driven into the post and bent over the top of the plate.

When this terminal is used with Standard 630001, the guardrail shall transition down to the height of the terminal prior to post 8.

All slope ratios are expressed as units of vertical displacement to units of horizontal displacement (V:H).

All dimensions are in inches (millimeters) unless otherwise shown.

Illinois Department of Transportation

APPROVED January 1, 2012
ENGINEER OF LOCAL ROADS AND STREETS
APPROVED January 1, 2012
ENGINEER OF DESIGN AND ENVIRONMENT

ISSUED 1-1-08

DATE	REVISIONS
1-1-12	Revised barrier terminal
	height and wood
	breakaway post.
1-1-09	Switched units to
	English (metric).

TRAFFIC BARRIER TERMINAL TYPE 1

(Sheet 1 of 2)

STANDARD B.L.R. 23-4

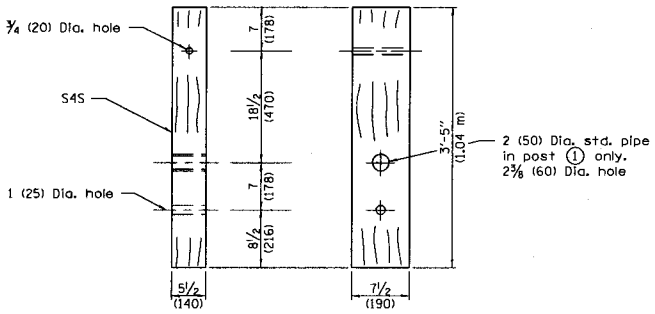

WOOD BREAKAWAY POST
(2 ea.)

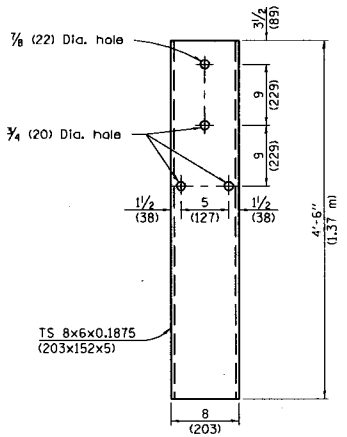

STEEL TUBE
(2 ea.)

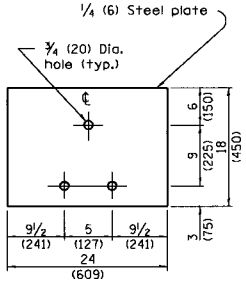

SOIL PLATE H
(2 ea.)

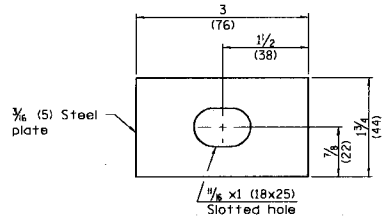

PLATE WASHER F
(1 ea.)

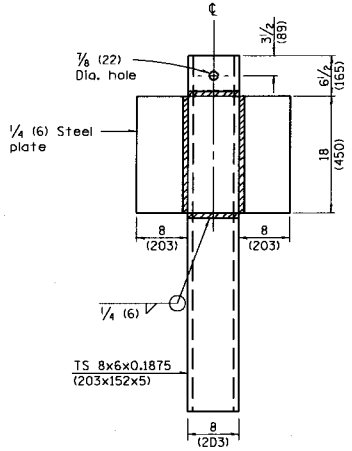

ALTERNATE SOIL PLATE CONNECTION

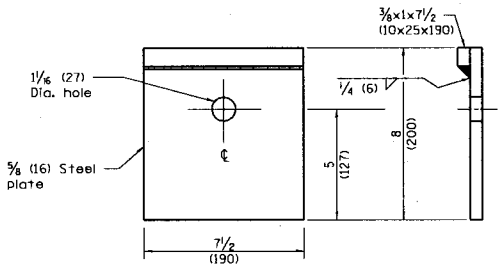

BEARING PLATE K
(1 ea.)

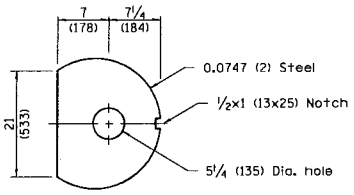

DIAPHRAGM
(2 ea.)

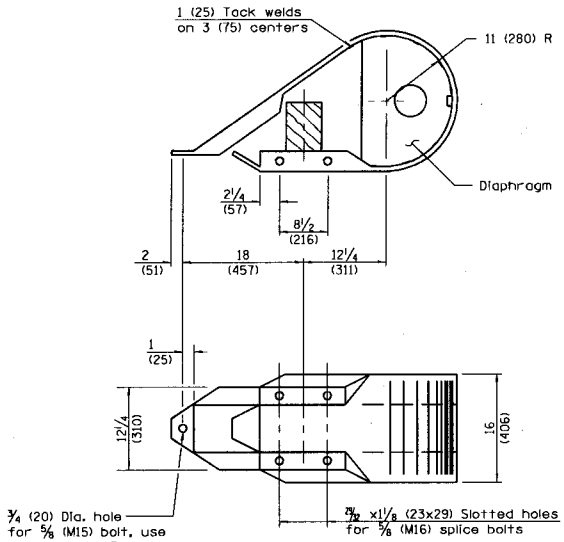

NOSE
(1 ea.)

Illinois Department of Transportation

APPROVED January 1, 2012
ENGINEER OF LOCAL ROADS AND STREETS

APPROVED January 1, 2012
ENGINEER OF DESIGN AND ENVIRONMENT

ISSUED 1-1-08

TRAFFIC BARRIER TERMINAL TYPE 1

(Sheet 2 of 2)

STANDARD B.L.R. 23-4

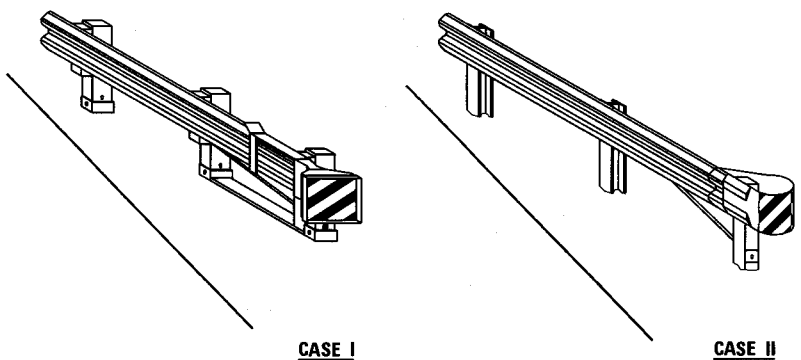

CASE I **CASE II**

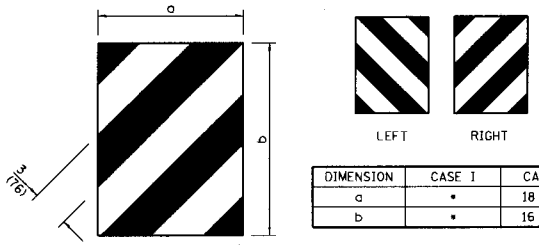

LEFT RIGHT

DIMENSION	CASE I	CASE II
a	*	18 (450)
b	*	16 (406)

* The width and height (a, b) of the terminal marker shall be within approximately 1 (25) of the outer edge of the terminal end, with a minimum reflective area of 288 sq. in. (0.18 m²).

TERMINAL MARKER DETAILS
Color: Black / Yellow reflectorized

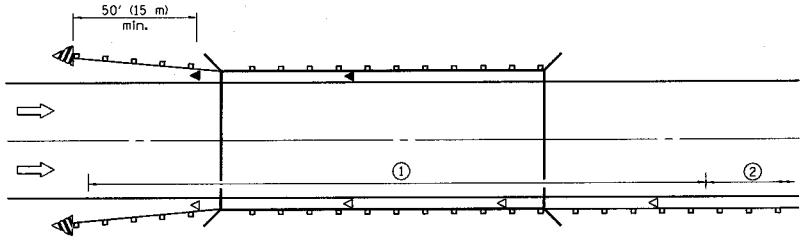

① Spacing 80 ft. (24 m) max. for first 400 ft. (122 m) or curve spacing shown in Standard 635001, whichever is less (min. 4 reflectors regardless of length).

② After 400 ft. (122 m), transition to normal delineator spacing shown in Standard 635001, and continue as required.

ONE-WAY TRAFFIC

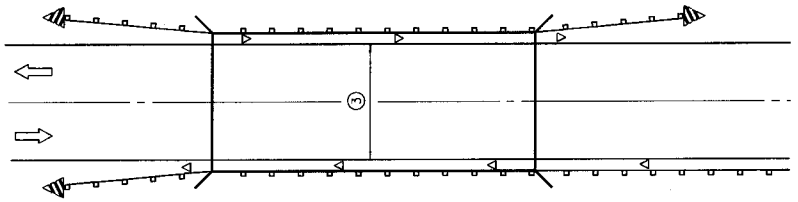

③ Bidirectional silver/silver should be used in lieu of monodirectional silver on both sides of two-lane bridges where the pavement is less than 24 (610) wider than the pavement approaching the bridge.

◁ Monodirectional crystal

◀ Monodirectional amber

Terminal Marker - Black/Yellow Left or Right as appropriate

TWO-WAY TRAFFIC

GUARDRAIL /BARRIER WALL / BRIDGE RAIL REFLECTIORS

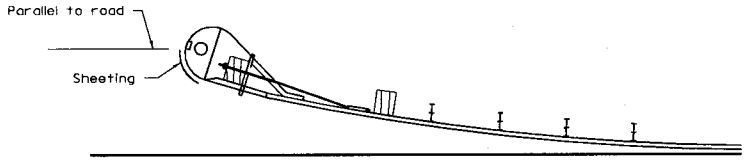

SHEETING POSITION: CASE II

All dimensions are in inches (millimeters) unless otherwise shown.

Illinois Department of Transportation

APPROVED January 1, 2009
ENGINEER OF OPERATIONS
APPROVED January 1, 2009
ENGINEER OF DESIGN AND ENVIRONMENT

ISSUED 1-1-2000

DATE	REVISIONS
1-1-09	Switched units to
	English (metric). Changed
	'white' to 'crystal' ref.
1-1-02	Revise Case I Dimension
	and removed alternate
	detail.

REFLECTOR AND TERMINAL MARKER PLACEMENT

STANDARD 635006-03

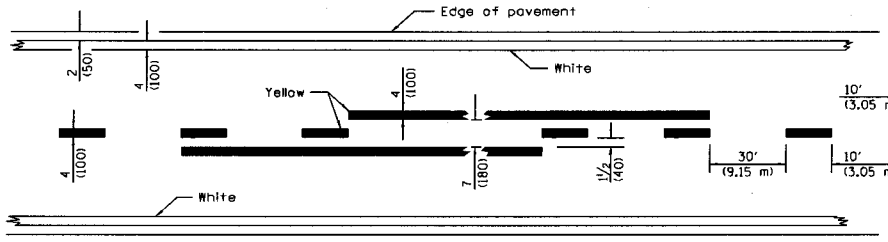

2 LANE

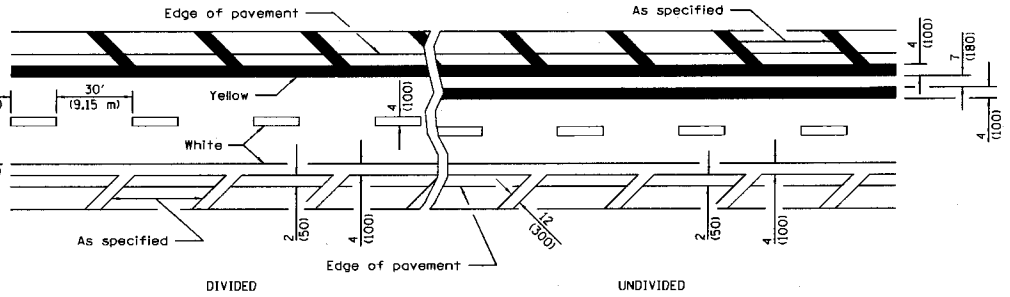

MULTI LANE

LANE AND EDGE LINES

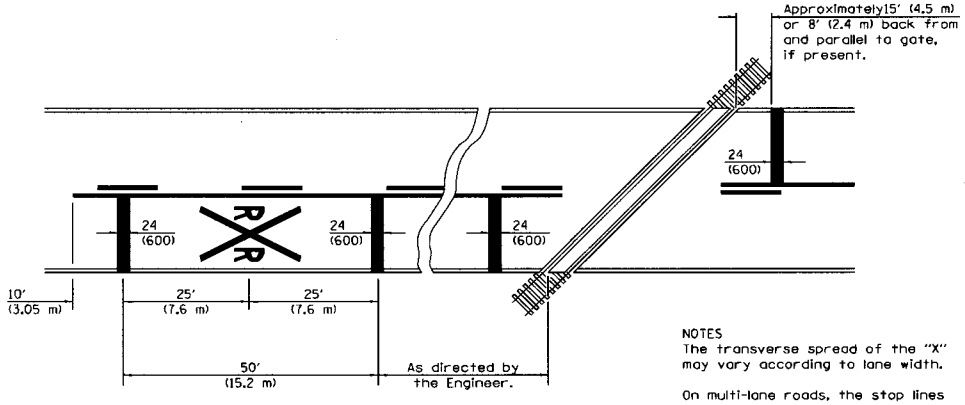

NOTES
The transverse spread of the "X" may vary according to lane width.

On multi-lane roads, the stop lines shall extend across all approach lanes and separate RXR symbols shall be placed adjacent to each other in each lane.

When the pavement marking symbol is used, a portion of the symbol should be located directly adjacent to the Advance Warning Sign (W10-1) as placed by Table 2C-4, Condition B of the MUTCD.

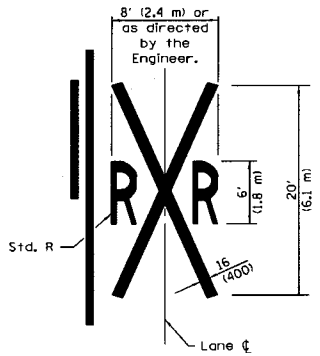

PAVEMENT MARKINGS AT RAILROAD-HIGHWAY GRADE CROSSING

All dimensions are in inches (millimeters) unless otherwise shown.

Illinois Department of Transportation

APPROVED January 1, 2014
ENGINEER OF OPERATIONS
APPROVED January 1, 2014
ENGINEER OF DESIGN AND ENVIRONMENT
ISSUED 1-1-97

DATE	REVISIONS
1-1-14	Added bike symbol. Renamed
	'LANE DROP ARROW' detail to
	'LANE-REDUCTION ARROW'.
1-1-12	Updated reference to
	current MUTCD table in
	notes.

TYPICAL PAVEMENT MARKINGS

(Sheet 1 of 2)

STANDARD 780001-04

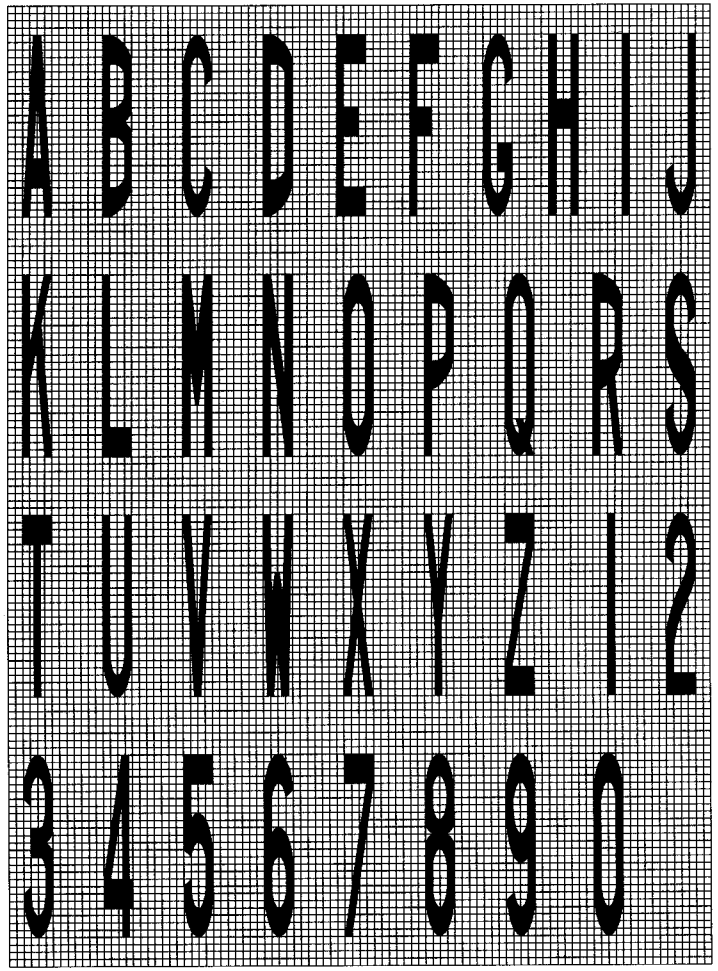

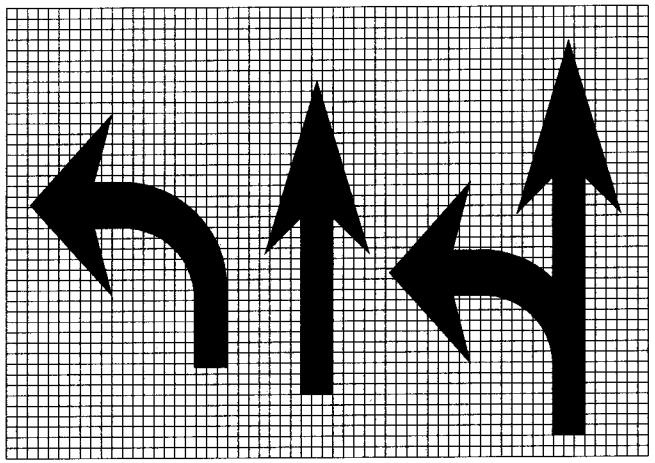

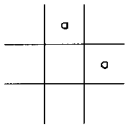

Legend Height	Arrow Size	a
6' (1.8 m)	Small	2.9 (74)
8' (2.4 m)	Large	3.8 (96)

The space between adjacent letters or numerals should be approximately 3 (75) for 6' (1.8 m) legend and 4 (100) for 8' (2.4 m) legend.

LETTER AND ARROW GRID SCALE

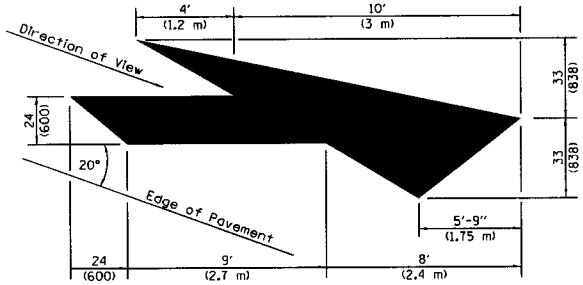

LANE-REDUCTION ARROW

Right lane-reduction arrow shown.
Use mirror image for left lane.

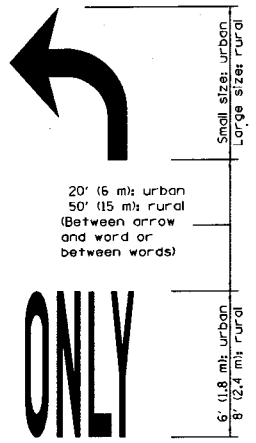

WORD AND ARROW LAYOUT

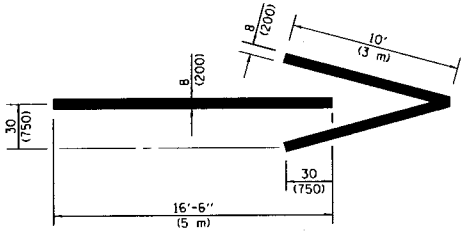

WRONG WAY ARROW

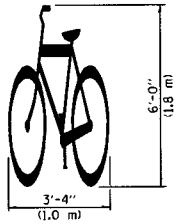

BIKE SYMBOL

Illinois Department of Transportation

APPROVED January 1, 2014
ENGINEER OF OPERATIONS

APPROVED January 1, 2014
ENGINEER OF DESIGN AND ENVIRONMENT

ISSUED 1-1-97

TYPICAL PAVEMENT MARKINGS

(Sheet 2 of 2)

STANDARD 780001-04

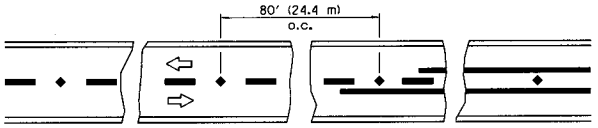

Reduce to 40' (12.2 m) o.c. on curves with posted or advisory speeds of 45 mph (70 km/h) or less.

TWO-LANE /TWO-WAY

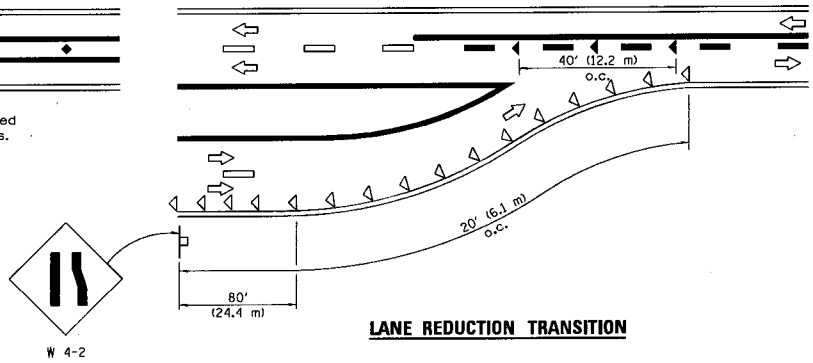

LANE REDUCTION TRANSITION

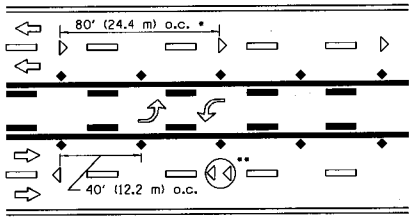

*,** See MULTI LANE DIVIDED detail for lane marker notes.

TWO-WAY LEFT TURN

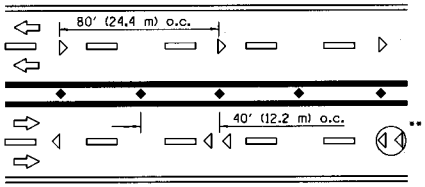

*,** See MULTI LANE DIVIDED detail for lane marker notes.

MULTI-LANE UNDIVIDED

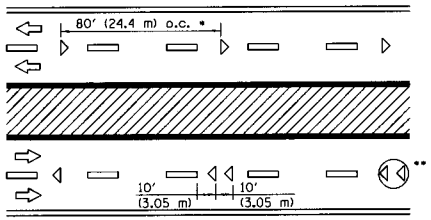

* Reduce to 40' (12.2 m) o.c. on curves where advisory speeds are 10 mph (15 km/h) lower than posted speeds.

** Where double lane line markers are specified, they shall be spaced as shown.

MULTI-LANE DIVIDED

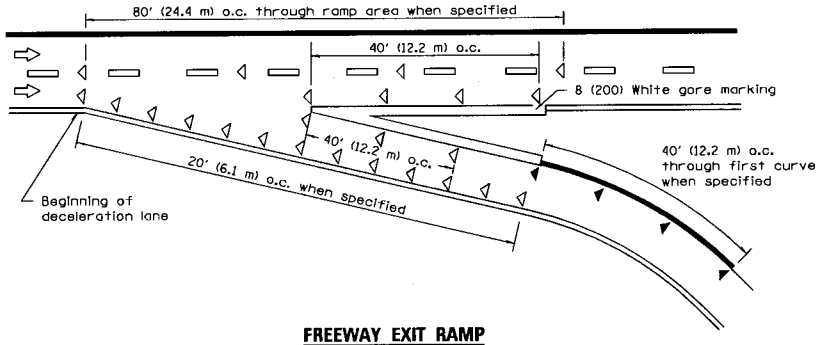

FREEWAY EXIT RAMP

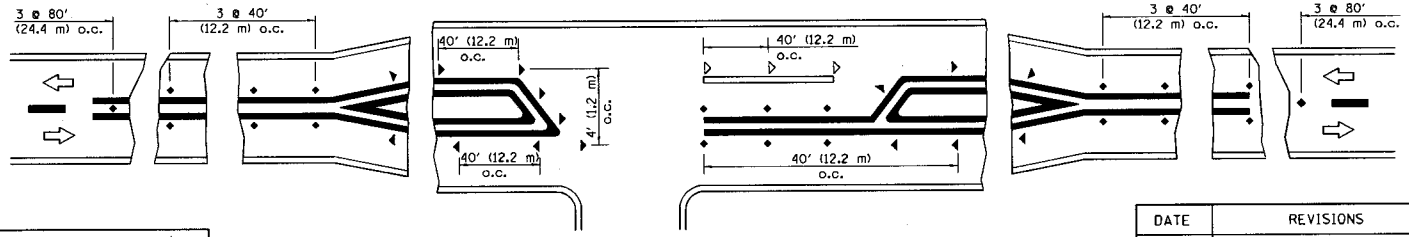

RURAL LEFT TURN

SYMBOLS

- Yellow stripe
- White stripe
- One-way amber marker
- One-way crystal marker
- Two-way amber marker

All dimensions are in inches (millimeters) unless otherwise shown.

Illinois Department of Transportation

APPROVED January 1, 2009
ENGINEER OF OPERATIONS

APPROVED January 1, 2009
ENGINEER OF DESIGN AND ENVIRONMENT

ISSUED 1-1-99

DATE	REVISIONS
1-1-09	Switched units to
	English (metric).
1-1-99	Extended double line to
	show different scenario
	in RURAL LEFT TURN.

TYPICAL APPLICATIONS RAISED REFLECTIVE PAVEMENT MARKERS

STANDARD 781001-03

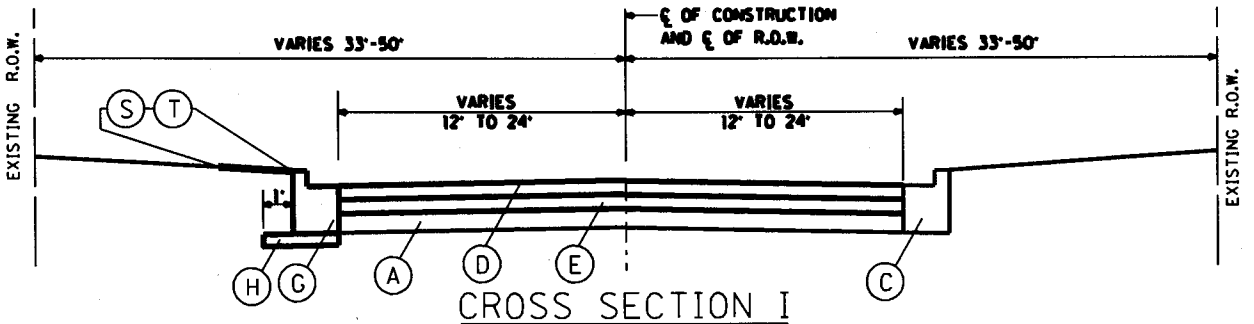

CROSS SECTION I

4 IN. MILL & RESURFACE WITH CURB AND GUTTER

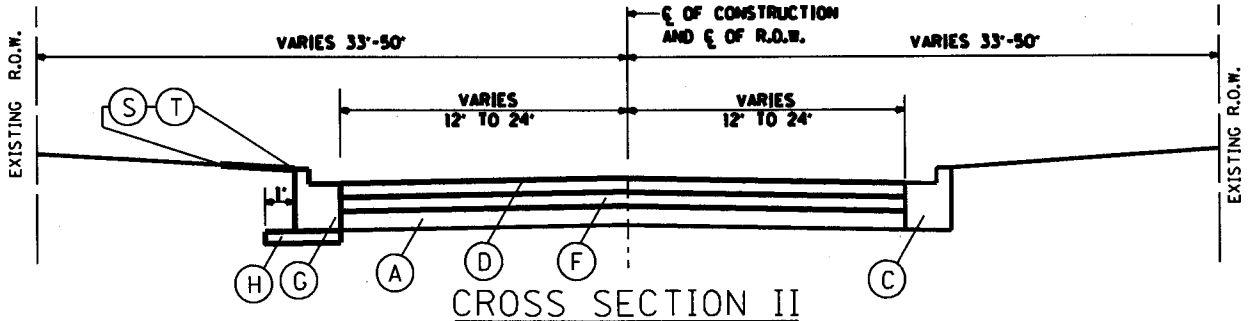

CROSS SECTION II

2.5 IN. MILL & RESURFACE WITH CURB AND GUTTER

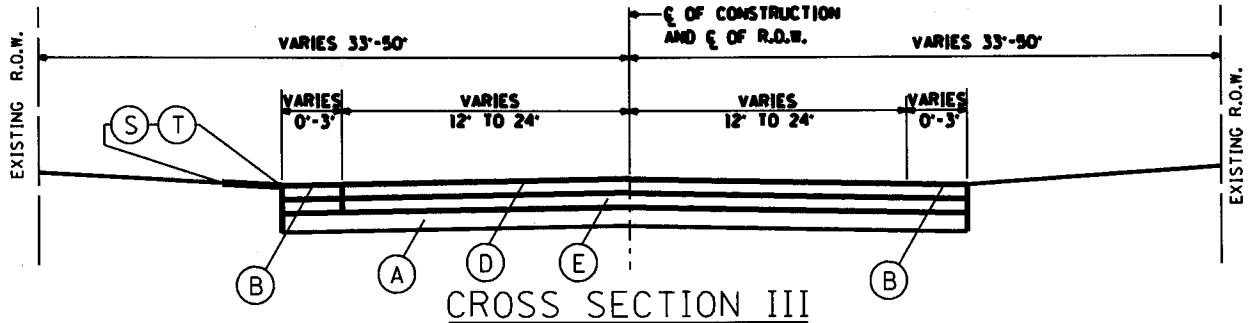

CROSS SECTION III

4 IN. MILL & RESURFACE WITH SHOULDER

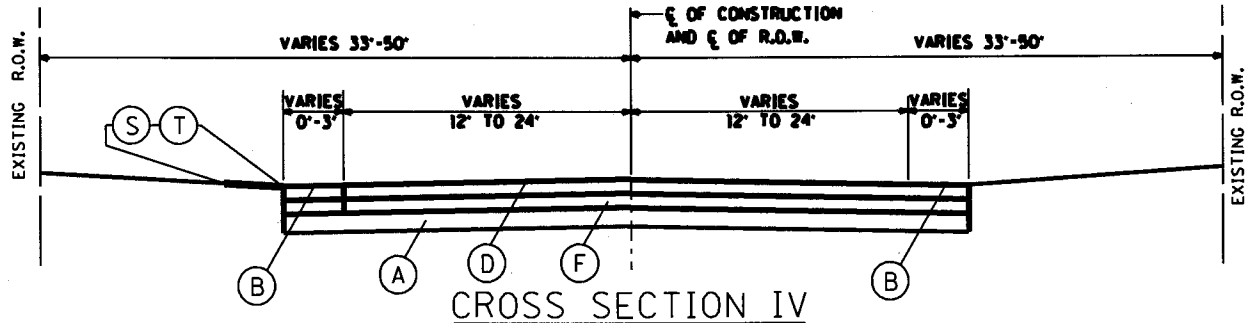

CROSS SECTION IV

2.5 IN. MILL & RESURFACE WITH SHOULDER

LEGEND:

- (A) EXISTING BASE COURSE
- (B) EXISTING SHOULDER (TO BE MILLED AND RESURFACED)
- (C) EXISTING CONCRETE CURB AND GUTTER
- (D) PROPOSED HOT-MIX ASPHALT SURFACE COURSE, MIX "D", IL-12.5 OR 9.5, N70 (1.75 IN.)
- (E) PROPOSED HOT-MIX ASPHALT BINDER COURSE, IL-19.0, N70 (2.25 IN.)
- (F) PROPOSED POLYMERIZED LEVELING BINDER (MACHINE METHOD) IL-4.75, N70 (0.75 IN.)
- (G) PROPOSED COMBINATION CONCRETE CURB AND GUTTER (WHERE REQUIRED)
- (H) PROPOSED SUBBASE GRANULAR MATERIAL TYPE B (6 IN.) (WHERE REQUIRED)
- (S) SODDING (WHERE REQUIRED)
- (T) FURNISHING AND PLACING TOPSOIL (4 IN.) (WHERE REQUIRED)

NOT TO SCALE

COUNTY OF COOK
DEPARTMENT OF TRANSPORTATION AND HIGHWAYS

TYPICAL CROSS SECTIONS
VARIOUS LOCATIONS

COMPUTED: KLP
DRAWN: KLP
CHECKED: MPS

PROPOSED LOCATIONS

1. KEDZIE AVENUE - NORTH OF 159TH STREET TO 155TH STREET
2. STEGER ROAD - HARLEM AVENUE TO CICERO AVENUE
3. 139TH STREET - COOPER'S GROVE ROAD TO CALIFORNIA AVENUE
4. COTTAGE GROVE - NORTH OF ROUTE 30 TO GLENWOOD LANSING ROAD

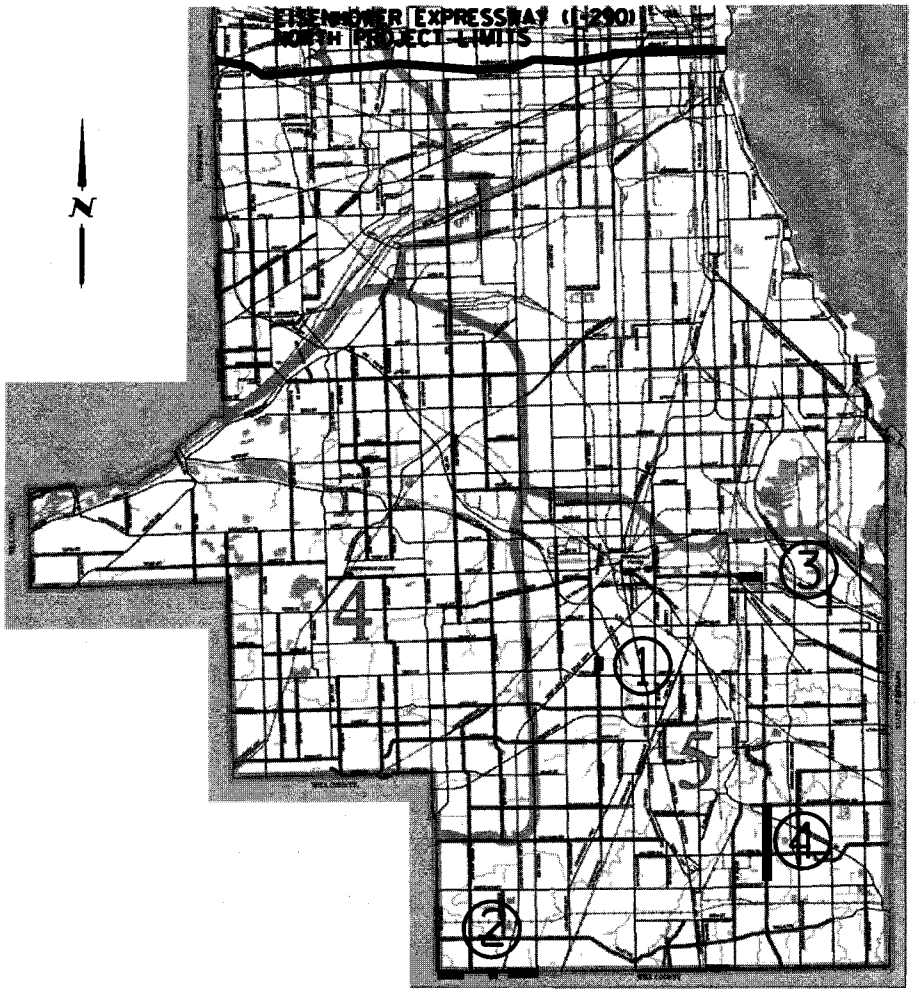

MUNICIPALITY, IL MUNICIPALITY, IL NAME TOWNSHIP	COUNTY HIGHWAY: XXX FISCAL YEAR: 2014 SECTION: 13-PREPS-01-RS	COUNTY OF COOK DEPARTMENT OF TRANSPORTATION AND HIGHWAYS	COMPUTED: HPS DRAWN: HPS CHECKED: XX	REVISIONS	DATE 11/19/2013	PAVEMENT MAINTENANCE - SOUTH PROPOSED LOCATIONS	P-1 NOT TO SCALE SHEET 1

$FILE_DATE_TIME$

PAVEMENT RESURFACING ENHANCEMENT PROGRAM - SOUTH 2014
13-PREPS-01-RS

ESTIMATED QUANTITIES BY LOCATION

		KEDZIE AVE	STEGER RD	139TH ST	COTTAGE GR	TOTAL	
	PAY ITEM	Quantity	Quantity	Quantity	Quantity	**Quantity**	**Unit**
1.	HOT-MIX ASPHALT SURFACE REMOVAL, 2 1/2 IN	13750	0	0	0	**13,750**	**SQ YD**
2.	HOT-MIX ASPHALT SURFACE REMOVAL, 4 IN		23687	4950	45067	**73,705**	**SQ YD**
3.	BITUMINOUS MATERIALS (PRIME COAT)	2750	4737	990	9013	**17,491**	**GAL**
4.	AGGREGATE (PRIME COAT)	27	47	10	90	**175**	**TON**
5.	POLYMERIZED LEVELING BINDER (MACHINE METHOD) IL-4.75, N50	578	0	0	0	**578**	**TON**
6.	HOT-MIX ASPHALT BINDER COURSE, IL-19.0, N70	0	2985	624	5678	**9,287**	**TON**
7.	HOT-MIX ASPHALT SURFACE COURSE, MIX "D", IL-9.5 N70	1348	2322	486	4417	**8,573**	**TON**
8.	CONSTRUCTING TEST STRIP	1	1	1	1	**4**	**EACH**
9.	CUTTING HOT-MIX ASPHALT SURFACE	216	192	174	275	**857**	**FOOT**
10.	TEMPORARY BUTT JOINT	276	192	120	275	**863**	**FOOT**
11.	COMBINATION CURB AND GUTTER REMOVAL	200	0	0	0	**200**	**FOOT**
12.	COMBINATION CONCRETE CURB AND GUTTER, TYPE B-6.12	75	0	0	0	**75**	**FOOT**
13.	COMBINATION CONCRETE CURB AND GUTTER, TYPE B-6.24	125	0	0	0	**125**	**FOOT**
14.	SIDEWALK REMOVAL	225	0	275	275	**775**	**SQ FT**
15.	AGGREGATE BASE COURSE, TYPE B, 4 INCH	3	0	3	3	**9**	**SQ FT**
16.	PORTLAND CEMENT CONCRETE SIDEWALK, 5 IN	225	0	50	25	**300**	**SQ FT**
17.	PORTLAND CEMENT CONCRETE SIDEWALK, 8 IN	0	0	225	250	**475**	**SQ FT**
18.	DETECTABLE WARNINGS	48	0	72	80	**200**	**SQ FT**
19.	GUARDRAIL REMOVAL	0	225	0	250	**475**	**FOOT**
20.	STEEL PLATE BEAM GUARDRAIL, TYPE A	0	25	0	50	**75**	**FOOT**
21.	TRAFFIC BARRIER TERMINAL, TYPE 1, SPECIAL	0	4	0	4	**8**	**EACH**
22.	FRAMES AND LIDS TO BE ADJUSTED, SPECIAL	7	12	3	23	**45**	**EACH**
23.	INLET FILTERS	7	12	3	23	**45**	**EACH**
24.	FFRAMES AND GRATES, TYPE 23V	3	0	1	1	**5**	**EACH**
25.	FRAMES AND GRATES, TYPE 24V	3	0	1	1	**5**	**EACH**
26.	FRAMES AND GRATES, TYPE 24V	3	0	1	1	**5**	**EACH**
27.	FRAMES AND LIDS, TYPE 1 (CLOSED)	3	0	1	1	**5**	**EACH**
28.	WATERPROOFING SANITARY MANHOLES TO BE RECONSTRUCTED, SPECIAL	3	0	1	1	**5**	**EACH**
29.	INLETS TO BE RECONSTRUCTED, SPECIAL	1	0	1	0	**2**	**EACH**
30.	CATCH BASINS TO BE RECONSTRUCTED, SPECIAL	1	0	1	0	**2**	**EACH**
31.	MANHOLES TO BE RECONSTRUCTED, SPECIAL	1	0	1	0	**2**	**EACH**
32.	VALVE VAULTS TO BE RECONSTRUCTED, SPECIAL	1	0	1	0	**2**	**EACH**
33.	AGGREGATE SHOULDERS, TYPE A	0	60	40	0	**100**	**TON**
34.	TOPSOIL FURNISH AND PLACE, 4 IN	28	48	10	91	**177**	**SQ YD**
35.	SEEDING CLASS 1A	0.05	0.09	0.02	0.16	**0.32**	**ACRE**
36.	EROSION CONTROL BLANKET	28	48	10	91	**177**	**ACRE**
37.	PHOSPHORUS FERTILIZER NUTRIENT	5	9	2	15	**31**	**POUND**
38.	POTASSIUM FERTILIZER NUTRIENT	5	9	2	15	**31**	**POUND**
39.	NITROGEN FERTILZER NUTRIENT	5	9	2	15	**31**	**POUND**
40.	THERMOPLASTIC PAVEMENT MARKING-LINE 4 IN	8995	32119	4224	33480	**78,818**	**FOOT**
41.	THERMOPLASTIC PAVEMENT MARKING-LINE 6 IN	425	162	260	975	**1,822**	**FOOT**
42.	THERMOPLASTIC PAVEMENT MARKING-LINE 8 IN	0	352	400	1480	**2,232**	**FOOT**
43.	THERMOPLASTIC PAVEMENT MARKING-LINE 12 IN	972	341	0	341	**1,654**	**FOOT**

Contract 1428-13429 - Addendum No. 1 - Attachment B - Estimated Quantities by Location

PAVEMENT RESURFACING ENHANCEMENT PROGRAM - SOUTH 2014
13-PREPS-01-RS

ESTIMATED QUANTITIES BY LOCATION

		KEDZIE AVE	STEGER RD	139TH ST	COTTAGE GR	TOTAL	
	PAY ITEM	Quantity	Quantity	Quantity	Quantity	Quantity	Unit
44.	THERMOPLASTIC PAVEMENT MARKING-LINE 24 IN	120	60	60	288	528	FOOT
45.	THERMOPLASTIC PAVEMENT MARKING-LETTERS AND SYMBOLS	115	39	39	117	310	FOOT
46.	RAISED REFLECTIVE PAVEMENT MARKER REMOVAL	0	0	0	250	250	EACH
47.	RAISED REFLECTIVE PAVEMENT MARKERS	198	190	40	250	678	EACH
48.	RAILROAD PROTECTIVE LIABILITY INSURANCE	0	1	1		2	L SUM
49.	SURVEY MONUMENTS	2	2	1		5	EACH
50.	ENGINEER'S FIELD OFFICE	9				9	CAL MO
51.	TRAFFIC PROTECTION					1	L SUM
52.	CONTRACT EXTRA WORK					45,000	UNIT
53.	CLASS C PATCHES, TYPE II, 10 IN	325				325	SQ YD
54.	CLASS C PATCHES, TYPE III, 10 IN	250				250	SQ YD
55.	CLASS D PATCHES, TYPE II, 10 IN		75	50	75	200	SQ YD
56.	CLASS D PATCHES, TYPE III, 10 IN		65	50	60	175	SQ YD

COUNTY OF COOK
CHICAGO, ILLINOIS
PROPOSAL

For a County Highway Improvement in the County of Cook, State of Illinois,

known as **PAVEMENT RESURFACING ENHANCEMENT PROGRAM–SOUTH 2014**

Route **VARIOUS** Section **13-PREPS-01-RS**

Cottage Grove – Lincoln Highway to Glenwood-Lansing Road
Kedzie Avenue – 158th Street to 155th Street
Steger Road – Harlem Avenue to Cicero Avenue
139th Street – Coopers Grove Road to Harrison Avenue

LOCATION OF IMPROVEMENT

The proposed improvement is part of the public highway system in the County of Cook, State of Illinois, located by section and route before mentioned, and is indicated on the map showing the County Highway System on file in the office of the County Clerk and also in the office of the Illinois Department of Transportation, Division of Highways, Springfield, Illinois.

The proposed improvements are part of the public highway system in the County of Cook, State of Illinois, located south of the Eisenhower Expressway (Interstate 290), and indicated on the map showing the County Highway System on file in the office of the County Clerk and also in the office of the Illinois Department of Transportation, Division of Highways, Springfield, Illinois.

Cottage Grove – Lincoln Highway to Glenwood-Lansing Road
Kedzie Avenue – 158th Street to 155TH Street
Steger Road – Harlem Avenue to Cicero Avenue
139th Street – Coopers Grove Road to Harrison Avenue

DESCRIPTION OF IMPROVEMENT

The improvement consists of furnishing all labor, materials and equipment required for Pavement Resurfacing Enhancement Program – South 2014. This includes but is not limited to hot-mix asphalt surface removal, hot-mix asphalt resurfacing, frame and lid adjustments, guardrail upgrades and maintenance, sidewalk removal and ADA compliant ramp replacement, traffic control and protection, pavement markings, restoration, and all appurtenant work required on a work order basis in Cook County, Illinois.

ECONOMIC DISCLOSURE STATEMENT AND EXECUTION DOCUMENTS

INDEX

Section	Description
I	**Instructions for Completion of Economic Disclosure Statement**
II	**Insert IDOT Certificate of Eligibility**
III	**Insert IDOT Affidavit of Availability**
IV	**MBE/WBE Forms** Utilization Plan Letter of Intent from MBE/WBE to perform as Subcontractor, Supplier and/or Consultant Petition for Reduction/Waiver of MBE/WBE Participation Goals
V	**Contractor Current Certifications**
VI	**Required Disclosures** Lobby, Local Business Preference, Child Support Enforcement Ordinance, Real Estate Ownership Affidavit of Child Support Obligations Disclosure of Ownership Interest Statement
VII	**Ethics Disclosure Forms** Introduction Letter of Explanation Gift Disclosure Form Familial Relationship Disclosure Provision Familial Relationship Disclosure Form
VIII	**Labor Standards & Prevailing Wage Requirements** Contractor's Certification Concerning Labor Standards & Prevailing Wage Requirements Form Subcontractor's Certification Concerning Labor Standards & Prevailing Wage Requirements Form
IX	**Execution Pages** Sole Proprietor Signature Page Partnership and/or Joint Venture Signature Page Corporation Signature Page Cook County Signature Page

INSTRUCTIONS FOR COMPLETION OF ECONOMIC DISCLOSURE STATEMENT AND EXECUTION DOCUMENT

This Economic Disclosure Statement and Execution Document ("EDS") is to be completed and executed by every Bidder on a County contract, every party responding to a Request for Proposals or Request for Qualifications "(Proposer"), and others as required by the Cook County Chief Procurement Officer. If the Undersigned is awarded a contract pursuant to the procurement process for which this EDS was submitted (the "Contract"), this Economic Disclosure Statement and Execution Document shall stand as the Undersigned's execution of the Contract.

Definitions. Capitalized terms used in this EDS and not otherwise defined herein shall have the meanings given to such terms in the Instructions to Bidders, General Conditions, Request for Proposals, and Request for Qualifications, or other documents, as applicable.

"Affiliated Entity" means a person or entity that, directly or indirectly: controls the Bidder, is controlled by the Bidder, or is, with the Bidder, under common control of another person or entity. Indicia of control include, without limitation, interlocking management or ownership; identity of interests among family members; shared facilities and equipment; common use of employees; and organization of a business entity following the ineligibility of a business entity to do business with the County under the standards set forth in the Certifications included in this EDS, using substantially the same management, ownership or principals as the ineligible entity.

"Bidder," "Proposer," "Undersigned," or ***"Applicant,"*** is the person or entity executing this EDS. Upon award and execution of a Contract by the County, the Bidder, Proposer, Undersigned or Applicant, as the case may be, shall become the Contractor or Contracting Party.

"Proposal," for purposes of this EDS, is the Undersigned's complete response to an RFP/RFQ, or if no RFQ/RFP was issued by the County, the "Proposal" is such other bid, quote or offer submitted by the Undersigned, and in any event a "Bid" includes this EDS.

"Code" means the Code of Ordinances, Cook County, Illinois available through the Cook County Clerk's Office website (http://www.cookctyclerk.com/sub/ordinances.asp). This page can also be accessed by going to www.cookctyclerk.com, clicking on the tab labeled "County Board Proceedings," and then clicking on the link to "Cook County Ordinances."

"Contractor" or ***"Contracting Party"*** means the Bidder, Proposer or Applicant with whom the County has entered into a Contract.

"EDS" means this complete Economic Disclosure Statement and Execution Document, including all sections listed in the Index and any attachments.

"Lobby" or "lobbying" means to, for compensation, attempt to influence a County official or county employee with respect to any County matter.

"Lobbyist" means any person or entity who lobbies.

"Prohibited Acts" means any of the actions or occurrences which form the basis for disqualification under the Code, or under the Certifications hereinafter set forth.

Sections 1 through 3: MBE/WBE Documentation.- (1 original set of documents) Sections 1 and 2 must be completed in order to satisfy the requirements of the County's Minority- and Women-Owned Business Enterprise Program established in Division 8 of the Cook County's Ordinance under the Procurement Code, as set forth in the Contract Documents, if applicable. If the Undersigned believes a waiver is appropriate and necessary, Section 3, the Petition for Waiver of **MBE/WBE** Participation must be completed.

Section 4: Certifications. - (1 original set of documents. If originals cannot be provided, a copy is acceptable) Section 4 sets forth certifications that are required for contracting parties under the Code. Execution of this EDS constitutes a warranty that all the statements and certifications contained, and all the facts stated, in the Certifications are true, correct and complete as of the date of execution.

Note: Cook County only accepts current certifications from Cook County and the City of Chicago.

Section 5: Economic and Other Disclosures Statement. - (1 original set of documents) Section 5 is the County's required Economic and Other Disclosures Statement form. Execution of this EDS constitutes a warranty that all the information provided in the EDS is true, correct and complete as of the date of execution, and binds the Undersigned to the warranties, representations, agreements and acknowledgements contained therein.

Sections 6: Execution Forms. Refer to section "Definition of Terms/Information for Bidders" for instructions of number of originals and number of copies needed when submitting a bid document.

Required Updates. The information provided in this EDS will be kept current. In the event of any change in any information provided, including but not limited to any change which would render inaccurate or incomplete any certification or statement made in this EDS, the Undersigned will supplement this EDS up to the time the County takes action, by filing an amended EDS or such other documentation as is requested.

Additional Information. The County's Governmental Ethics and Campaign Financing Ordinances, impose certain duties and obligations on persons or entities seeking County contracts, work, business, or transactions. For further information please contact the Director of Ethics at (312) 603-4304 (69 W. Washington St. Suite 3040, Chicago, IL 60602) or visit our web-site at www.cookcountygov.com and go to the Ethics Department link. The Bidder must comply fully with the applicable ordinances.

Insert

IDOT Certificate of Eligibility

Illinois Department of Transportation

Certificate of Eligibility

Contractor No 1320

D Construction, Inc.
1488 South Broadway Street Coal City, IL 60416

WHO HAS FILED WITH THE DEPARTMENT AN APPLICATION FOR PREQUALIFICATION STATEMENT OF EXPERIENCE, EQUIPMENT AND FINANCIAL CONDITION IS HEREBY QUALIFIED TO BID AT ANY OF DEPARTMENT OF TRANSPORTATION LETTINGS IN THE CLASSES OF WORK AND WITHIN THE AMOUNT AND OTHER LIMITATIONS OF EACH CLASSIFICATION, AS LISTED BELOW, FOR SUCH PERIOD AS THE UNCOMPLETED WORK FROM ALL SOURCES DOES NOT EXCEED SUPER UNLIMITED

001	EARTHWORK	$21,075,000
002	PCC PAVING	$22,275,000
003	HMA PLANT MIX	Unlimited
006	CLEAN & SEAL CRACKS/JOINTS	$850,000
012	DRAINAGE	$21,550,000
014	ELECTRICAL	$7,175,000
017	CONCRETE CONSTRUCTION	$17,950,000
018	LANDSCAPING	$1,075,000
024	GROUTING	$550,000
032	COLD MILL,PLAN. & ROTOMILL	$2,625,000
034	DEMOLITION	$1,475,000
08A	AGGREGATE BASES & SURF. (A)	$19,675,000
09C	HWY., R.R. & WATERWAY STR.	$35,575,000

THIS CERTIFICATE OF ELIGIBILITY IS VALID FROM 1/7/2014 TO 2/28/2015 INCLUSIVE, AND SUPERSEDES ANY CERTIFICATE PREVIOUSLY ISSUED, BUT IS SUBJECT TO REVISION OR REVOCATION, IF AND WHEN CHANGES IN THE FINANCIAL CONDITION OF THE CONTRACTING FIRM OR OTHER FACTS JUSTIFY SUCH REVISIONS OR REVOCATION.
ISSUED AT SPRINGFIELD, ILLINOIS ON 1/7/2014.

Tim Kell

Acting Engineer of Construction

IL 494-0645

Insert

IDOT Affidavit of Availability

"D" Construction, Inc.

General Contractor

1488 South Broadway • Coal City, IL 60416
Office (815) 634-2555 • FAX (815) 634-8748

April 23, 2014

Cook County Highway Department
118 N Clark Street
Room 1018
Chicago, IL

Sealed Bid For: "Pavement Resurfacing Enhancement Program – South 2014 –
Section #13-PREPS-01-RS"
Bid Due: 4/23/2014 @ 10:00 A.M.

To whom it may concern:

Per the Illinois Department of Transportation Rules of Prequalification of Contractors please find our request to forgo filing an Affidavit of Availability per Article 650.310 sub D based on our Super Unlimited financial rating (See Attached Certificate of Eligibility).

If you have any questions, please call (815) 634-2555.

Sincerely,

Kenneth Sandeno
President

MBE/WBE UTILIZATION PLAN (SECTION 1)

BIDDER/PROPOSER HEREBY STATES that all MBE/WBE firms included in this Plan are certified MBEs/WBEs by at least one of the entities listed in the General Conditions.

I. BIDDER/PROPOSER MBE/WBE STATUS: (check the appropriate line)

_____ Bidder/Proposer is a certified MBE or WBE firm. (If so, attach copy of appropriate Letter of Certification)

_____ Bidder/Proposer is a Joint Venture and one or more Joint Venture partners are certified MBEs or WBEs. (If so, attach copies of Letter(s) of Certification, a copy of Joint Venture Agreement clearly describing the role of the MBE/WBE firm(s) and its ownership interest in the Joint Venture and a completed Joint Venture Affidavit -- available from the Office of Contract Compliance)

X Bidder/Proposer is not a certified MBE or WBE firm, nor a Joint Venture with MBE/WBE partners, but will utilize MBE and WBE firms either directly or indirectly in the performance of the Contract. (If so, complete Sections II and III).

II. [X] Direct Participation of MBE/WBE Firms [ ] Indirect Participation of MBE/WBE Firms

Where goals have not been achieved through direct participation, Bidder/Proposer shall include documentation outlining efforts to achieve Direct Participation at the time of Bid/Proposal submission. Indirect Participation will only be considered after all efforts to achieve Direct Participation have been exhausted. Only after written documentation of Good Faith Efforts is received will Indirect Participation be considered.

MBEs/WBEs that will perform as subcontractors/suppliers/consultants include the following:

(MBE)/WBE Firm: J. Jasso Trucking Co.

Address: 5719 S. Homan Avenue

E-mail: j.jassotrucking@yahoo.com

Contact Person: Jose Jasso Phone: 773-457-6686

Dollar Amount Participation: $ 223,376

Percent Amount of Participation: 12.51% %

*Letter of Intent attached? Yes X No _____
*Letter of Certification attached? Yes X No _____

MBE/(WBE) Firm: AMS Earth Movers, Inc.

Address: 39555 N. Rt. 83

E-mail: peter@ams-earthmovers.com

Contact Person: Peter Sonza-Novera Phone: 847-838-9501

Dollar Amount Participation: $ 93,100

Percent Amount of Participation: 5.215% %

*Letter of Intent attached? Yes X No _____
*Letter of Certification attached? Yes X No _____

Attach additional sheets as needed.

*Additionally, all Letters of Intent, Letters of Certification and documentation of Good Faith Efforts must be current.

LETTER OF INTENT (SECTION 2)

M/WBE Firm: J. Jasso Trucking, Co
Address: 5719 S. Homan Ave
Contact Person: Jose Jasso
Certification Expiration Date: Pending
Email: j.jassotrucking@yahoo.com

Contract #:
City/State/ Zip: Chicago, IL 60629
Phone: 773.457.6686 Fax: 773.434.3241
Race/Gender: H/M

Participation: ☑ Direct [ ] Indirect

Will the M/WBE firm be subcontracting any of the performance of this contract to another firm?

☑ No [ ] Yes – Please attach explanation. Proposed Subcontractor:

The undersigned M/WBE is prepared to provide the following Commodities/Services for the above named Project/ Contract:

Trucking

Indicate the Dollar Amount, or Percentage, and the Terms of Payment for the above-described Commodities/ Services:

$223,376 (2.51%) per subcontract

(If more space is needed to fully describe M/WBE Firm's proposed scope of work and/or payment schedule, attach additional sheets)

THE UNDERSIGNED PARTIES AGREE that this Letter of Intent will become a binding Subcontract Agreement conditioned upon the Bidder/Proposer's receipt of a signed contract from the County of Cook. The Undersigned Parties do also certify that they did not affix their signatures to this document until all areas under Description of Service/ Supply and Fee/Cost were completed.

Jose Jasso
Signature (*M/WBE*)
Jose Jasso
Print Name
J. Jasso Trucking, Co.
Firm Name
4-22-14
Date

Subscribed and sworn before me this 23 day of April 20 14
Notary Public Tamara L Hansen
SEAL

TAMARA L. HANSEN
OFFICIAL SEAL
Notary Public, State of Illinois
My Commission Expires
October 01, 2017

Rob Male
Signature (*Prime Bidder/Proposer*)
Rob Male
Print Name
D Construction, Inc.
Firm Name
4-23-14
Date

Subscribed and sworn before me this 23 day of April 20 14
Notary Public Tamara L Hansen
SEAL

TAMARA L. HANSEN
OFFICIAL SEAL
Notary Public, State of Illinois
My Commission Expires
October 01, 2017

DEPARTMENT OF PROCUREMENT SERVICES
CITY OF CHICAGO

NOV 21 2013

Jose Jasso
J. Jasso Trucking Co.
5719 S. Homan Avenue
Chicago, IL 60629

Dear Mr. Jasso:

We are pleased to inform you that **J. Jasso Trucking Co.** has been recertified as a **Minority Business Enterprise ("MBE")** by the City of Chicago ("City"). This **MBE** certification is valid until **11/30/2018**; however your firm's certification must be revalidated annually. In the past the City has provided you with an annual letter confirming your certification; such letters will no longer be issued. As a consequence, we require you to be even more diligent in filing your **annual No-Change Affidavit 60 days** before your annual anniversary date.

It is now your responsibility to check the City's certification directory and verify your certification status. As a condition of continued certification during the five year period stated above, you must file an annual No-Change Affidavit. Your firm's **annual No-Change Affidavit** is due by **11/30/2014, 11/30/2015, 11/30/2016, and 11/30/2017.** Please remember, you have an affirmative duty to file your **No-Change Affidavit 60 days** prior to the date of expiration. Failure to file your annual No-Change Affidavit may result in the suspension or rescission of your certification.

Your firm's five year certification will expire on **11/30/2018.** You have an affirmative duty to file for recertification **60 days** prior to the date of the five year anniversary date. Therefore, you must file for recertification by **09/30/2018.**

It is important to note that you also have an ongoing affirmative duty to notify the City of any changes in ownership or control of your firm, or any other fact affecting your firm's eligibility for certification **within 10 days** of such change. These changes may include but are not limited to a change of address, change of business structure, change in ownership or ownership structure, change of business operations, gross receipts and or personal net worth that exceed the program threshold. Failure to provide the City with timely notice of such changes may result in the suspension or rescission of your certification. In addition, you may be liable for civil penalties under Chapter 1-22, "False Claims", of the Municipal Code of Chicago.

Please note – you shall be deemed to have had your certification lapse and will be ineligible to participate as a **MBE** if you fail to:

- File your annual No-Change Affidavit within the required time period;
- Provide financial or other records requested pursuant to an audit within the required time period;
- Notify the City of any changes affecting your firm's certification within 10 days of such change; or
- File your recertification within the required time period.

Please be reminded of your contractual obligation to cooperate with the City with respect to any reviews, audits or investigation of its contracts and affirmative action programs. We strongly encourage you to assist us in maintaining the integrity of our programs by reporting instances or suspicions of fraud or abuse to the **City's Inspector General at chicagoinspectorgeneral.org, or 866-IG-TIPLINE (866-448-4754).**

Be advised that if you or your firm is found to be involved in certification, bidding and/or contractual fraud or abuse, the City will pursue decertification and debarment. In addition to any other penalty imposed by law, any person who knowingly obtains, or knowingly assists another in obtaining a contract with the City by falsely representing the individual or entity, or the individual or entity assisted is guilty of a misdemeanor, punishable by incarceration in the county jail for a period not to exceed six months, or a fine of not less than $5,000 and not more than $10,000 or both.

Your firm's name will be listed in the City's Directory of Minority and Women-Owned Business Enterprises in the specialty area(s) of:

NAICS Code(s):
484220 - Dump Trucking (e.g., gravel, sand, top soil)
484220 - Gravel Hauling, Local
484220 - Sand Hauling, Local
484220 - Top-Soil Hauling, Local

Your firm's participation on City contracts will be credited only toward **Minority Business Enterprise** goals in your area(s) specialty. While your participation on City contracts is not limited to your area of specialty, credit toward goals will be given only for work that is self-performed and providing a commercially useful function that is done in the approved specialty category.

Thank you for your interest in the City's Minority and Women-Owned Business Enterprise (MBE/WBE) Program.

Sincerely,

Jamie L. Rhee
Chief Procurement Officer

JLR/gc

$92 per hour & 1/2 travel

per Jose 4-22-14

MBE

Facsimile Transmittal

Company name: J. Jasso Trucking, Company	
Phone:	
Fax: (773) 434-3241	
Address: 5719 S. Human Ave Chicago IL 60629	
To: Rob Male	**From:** Jose
Fax #: (815) 634-8748	**Fax #:** 773-434-3241
Date: 4/22/14	**# of pages:** 5

Messages:

If you have any Questions Please contact Jose @ 773-457-6686

2428 hours @ $92 = $223,376

Thank You

LETTER OF INTENT (SECTION 2)

M/WBE Firm: AMS Earth Movers Inc.

Contract #:

Address: 39555 N. Rt. 83

City/State/ Zip: Lake Villa, Il 60046

Contact Person: Peter Sonza-Novera

Phone: 847-838-9501 Fax: 847-239-0410

Certification Expiration Date: October 14, 2014

Race/Gender: White / Female

Email: peter@ams-eathmovers.com

Participation: [ ] Direct [X] Indirect

Will the M/WBE firm be subcontracting any of the performance of this contract to another firm?

[X] No [ ] Yes – Please attach explanation. Proposed Subcontractor:

The undersigned M/WBE is prepared to provide the following Commodities/Services for the above named Project/ Contract:

Trucking

Indicate the **Dollar Amount**, or **Percentage**, and the **Terms of Payment** for the above-described Commodities/ Services:

$ 93,100 (5.215%)

(If more space is needed to fully describe M/WBE Firm's proposed scope of work and/or payment schedule, attach additional sheets)

THE UNDERSIGNED PARTIES AGREE that this Letter of Intent will become a binding Subcontract Agreement conditioned upon the Bidder/Proposer's receipt of a signed contract from the County of Cook. The Undersigned Parties do also certify that they did not affix their signatures to this document until all areas under Description of Service/ Supply and Fee/Cost were completed.

Signature (M/WBE)

Julie Savitt
Print Name

AMS Earth Movers Inc.
Firm Name

4-22-2014
Date

Subscribed and sworn before me this 22 day of April 20 2014

Notary Public

SEAL

OFFICIAL SEAL
LISA LEYVA
NOTARY PUBLIC - STATE OF ILLINOIS
MY COMMISSION EXPIRES 02/21/15

Signature (Prime Bidder/Proposer)

Print Name

Construction
Firm Name

4-23-14
Date

Subscribed and sworn before me this 23 day of April 20 14

Notary Public

SEAL

TAMARA L. HANSEN
OFFICIAL SEAL
Notary Public, State of Illinois
My Commission Expires
October 01, 2017

December 26, 2013

Illinois Department of Transportation

Office of Business & Workforce Diversity
2300 South Dirksen Parkway / Springfield, Illinois 62764

May 16, 2013

CERTIFIED-RETURN RECEIPT REQUESTED

Ms. Julie Savitt
AMS Earth Movers, Inc.
39555 N. Hwy. 83
Lake Villa, IL 60046

Dear Ms. Savitt:

The Illinois Department of Transportation (IDOT) has approved the "No Change Affidavit" for AMS Earth Movers, Inc., and determined that the firm continues to meet DBE eligibility standards to perform work towards DBE goals.

In order to remain certified and in good standing, you must annually submit a No Change Affidavit. IDOT will send an affidavit form 60 days prior to the firm's next anniversary date.

Should the submitted information change, you are required to notify IDOT's Bureau of Small Business Enterprises (bureau) within 30 days of the change.

Note: Pursuant to 49 CFR Part 26.83(i), whenever there are any changes in circumstances affecting your firm's eligibility status, your firm must provide written notification to IDOT within 30 days of the occurrence of the change. If you fail to make timely notification, it may result in the loss of your firm's certification.

If you have any questions, please contact the bureau at (217) 782-5490.

Sincerely,

Debra A. Clark, Acting Bureau Chief
Bureau of Small Business Enterprises

WBE

Rate Proposal

AMS EARTHMOVERS

AMS Earth Movers, Inc.
39555 N. IL 83 Lake Villa, IL 60046
Phone (847) 838-9501 Fax (847) 239-0410

Client Information:

Contact: Rob Male
Company: D Construction
Address: 1488 S Broadway
Coal City, IL 60416
Phone: (815) 634-2555
Fax: (815) 634-8748 Email: r.male@dconstruc

Project: Cook County Pricing
Quote Date: 4/22/2014 **Quote Expires:** 5/22/2014
Quote#: 41751 -04
Job Name:
Address:

Work to be performed (the "Work"):

Prices are valid for thirty (30) days after which AMS reserves the right to withdraw this proposal if not accepted.

$93,100 @ $98 =
950 hours

Hourly Rates:

(trucks are available at the following hourly rates outside of work quoted below)

Semi Dump	$	98.00	per hour (1 hour travel)
Pervaling Wage Semi Dump	$	108.00	per hour (1 hour travel)
Flatbed Trailer	$	110.00	per hour (port to port)
Lowboy	$	125.00	per hour (port to port + permits)
Driver Overtime Rate	$	22.00	additional per hour (per prevailing wage requirements)

Export:

(dependent on acceptance of material by fill site operator)

Material	QTY	U/M	Plant	Pricing is calculated on 3 loads per day.	Total

Aggregates:

Note: Tax rate for Lake Villa is 7% on Material price

Material	QTY	U/M	Plant	Unit Price	Cartage	Tax*	Total
		ton				$0.00	$0.00
		ton				$0.00	$0.00
		ton				$0.00	$0.00
		ton				$0.00	$0.00
		ton				$0.00	$0.00
		ton				$0.00	$0.00

Exceptions:

1) Prices are quoted as "dump and run". Wait time in excess of 15 minutes will be billed at the rate of $98.00 per hour.
2) Soils approval, testing, manifesting, and dump fees are by others.
3) All rates are quoted for straight time work only. Saturday, Sunday, and holiday work may incur an additional "Over Time" charge.
4) Rates are valid for the 2014 Construction season with a 3% price increase beginning on December 31st, 2014.
5) Recycled inventory is not guaranteed.
6) Proposal is contingent on credit approval.

* tax is exempt only if a valid tax exempt letter is provided to AMS Earth Movers, Inc.

Initial _____

Rate Proposal

AMS Earth Movers, Inc.
39555 N. IL 83 Lake Villa, IL 60046
Phone (847) 838-9501 Fax (847) 239-0410

Date: 4/22/2014 **Quote#:** 41751 -04 **Job Name:** 0

Terms & Conditions

1. All Work subject to the availability of labor and/or materials and other circumstances beyond the reasonable control of AMS. All materials to be provided or utilized in the completion of the Work are subject to availability. The availability of dumpsites is subject to weather conditions and other circumstances beyond the reasonable control of AMS.

2. A fifteen (15) minute demurrage time is allowed per load. After those 15 minutes have elapsed, wait time will be charged at the hourly rates of $98.00 for semis and $88.00 for 6 wheelers.

3. Trucks must be cancelled at least two (2) hours before their scheduled start time. Two (2) hours "Showtime" will be charged for each truck at the rate of $98.00 per hour per semi and $88.00 per hour per 6 wheeler.

4. There is a minimum charge of 18 tons per load, 6 hour minimum per truck, and tolls are the customers responsibility if applicable, overweight tickets will be responsibility of the customer.

5. Payment is due within 30 days of billing. If payment is not received by AMS within 30 days of billing, AMS will charge interest at the rate of two percent (2%) per month as a late charge.

6. This work order does not constitute an agreement to complete the Work and shall not bind AMS unless and until AMS, in its sole discretion, elects to be bound hereby by executing and delivering to Purchaser an original counterpart hereof. This agreement shall be automatically withdrawn by AMS if not accepted by the client within thirty (30) days of the original agreement.

7. This agreement shall be governed by, and shall be interpreted, construed and enforced in accordance with, the laws of the State of Illinois without regard to its rules regarding conflicts of law. Jurisdiction and Venue shall be in the Circuit Court of Cook County, Illinois First District for resolution of any disputes arising hereunder. If any term or provision of this agreement or the application thereof to any person or circumstances shall, to any extent, be invalid or unenforceable, the remainder of this agreement, or the application of such term or provision to persons or circumstances other than those as to which it is held invalid or unenforceable, shall not be affected thereby, and each term and provision of this agreement shall be valid and be enforced to the fullest extent permitted by law.

8. If either party prevails in any action to enforce or interpret this agreement, the prevailing party shall be entitled to recover its reasonable attorney's fees and costs for all stages of the litigation, including but not limited to, appellate proceedings, in addition to any other remedy granted. The terms of this section shall survive any termination of this agreement. I understand that if collection action should become necessary for recovery of any monies due under this contract, Client agrees to pay all collection costs, court costs, and reasonable attorney fees.

9. Rates are valid for the 2014 construction season. Rates subject to 3% increase on December 31st, 2014.

10. All rates are quoted for straight time work only. Saturday, Sunday, and holiday work will incur an additional Over Time charge.

11. Repair charges for any damage to trucks, tarps, or tarping systems resulting from negligent loading or unloading by customers representive will be charged to the customer.

12. Add 1% to cartage rates for every $0.10/gallon increase in diesel fuel above $4.00/gallon as measured by AAA fuel gauge of Metro Chicago

13. Customers has thirty days to dispute an invoice charge with supporting documentation. If no dispute is made, the customer is responsible to pay the invoice in full.

CLIENT ACCEPTANCE OF AGREEMENT

I agree and accept to contract AMS to complete the Work specified above subject to the terms and conditions set forth above. I agree and understand that the price quoted above is an estimate and that the actual price of the work may change. I hereby authorize AMS to complete the Work and agree to make payments as per the invoices sent to me by AMS.

Agreed to & Accepted by: _____ Date: _____

PETITION FOR WAIVER OF MBE/WBE PARTICIPATION (SECTION 3)

A. BIDDER/PROPOSER HEREBY REQUESTS:

☐ FULL MBE WAIVER ☐ FULL WBE WAIVER

☐ REDUCTION (PARTIAL MBE and/or WBE PARTICIPATION)

_____ % of Reduction for MBE Participation
_____ % of Reduction for WBE Participation

B. REASON FOR FULL/REDUCTION WAIVER REQUEST

Bidder/Proposer shall check each item applicable to its reason for a waiver request. Additionally, supporting documentation shall be submitted with this request. If such supporting documentation cannot be submitted with bid/proposal/quotation, such documentation shall be submitted directly to the Office of Contract Compliance no later than three (3) days from the date of submission date.

☐ (1) Lack of sufficient qualified MBEs and/or WBEs capable of providing the goods or services required by the contract. **(Please explain)**

☐ (2) The specifications and necessary requirements for performing the contract make it impossible or economically infeasible to divide the contract to enable the contractor to utilize MBEs and/or WBEs in accordance with the applicable participation. **(Please explain)**

☐ (3) Price(s) quoted by potential MBEs and/or WBEs are above competitive levels and increase cost of doing business and would make acceptance of such MBE and/or WBE bid economically impracticable, taking into consideration the percentage of total contract price represented by such MBE and/or WBE bid. **(Please explain)**

☐ (4) There are other relevant factors making it impossible or economically infeasible to utilize MBE and/or WBE firms. **(Please explain)**

C. GOOD FAITH EFFORTS TO OBTAIN MBE/WBE PARTICIPATION

☐ (1) Made timely written solicitation to identified MBEs and WBEs for utilization of goods and/or services; and provided MBEs and WBEs with a timely opportunity to review and obtain relevant specifications, terms and conditions of the proposal to enable MBEs and WBEs to prepare an informed response to solicitation. **(Please attach)**

☐ (2) Followed up initial solicitation of MBEs and WBEs to determine if firms are interested in doing business. **(Please attach)**

☐ (3) Advertised in a timely manner in one or more daily newspapers and/or trade publication for MBEs and WBEs for supply of goods and services. **(Please attach)**

☐ (4) Used the services and assistance of the Office of Contract Compliance staff. **(Please explain)**

☐ (5) Engaged MBEs & WBEs for indirect participation. **(Please explain)**

D. OTHER RELEVANT INFORMATION

Attach any other documentation relative to Good Faith Efforts in complying with MBE/WBE participation.

CONTRACTOR CURRENT CERTIFICATIONS
(SECTION 4)

The following certifications are made pursuant to state law and the code. The undersigned is cautioned to carefully read these certifications prior to signing the signature page. Signing the signature page shall constitute a warranty by the undersigned that all the statements, certifications and information set forth within these certifications are true, complete and correct as of the date the signature page is signed. The undersigned is notified that if the county learns that any of the following certifications were falsely made, that any contract entered into with the undersigned shall be subject to termination.

A. PERSONS AND ENTITIES SUBJECT TO DISQUALIFICATION

No person or business entity shall be awarded a contract or sub-contract, for a period of five (5) years from the date of conviction or entry of a plea or admission of guilt, civil or criminal, if that person or business entity:

1) Has been convicted of an act committed, within the State of Illinois, of bribery or attempting to bribe an officer or employee of a unit of state, federal or local government or school district in the State of Illinois in that officer's or employee's official capacity;

2) Has been convicted by federal, state or local government of an act of bid-rigging or attempting to rig bids as defined in the Sherman Anti-Trust Act and Clayton Act. Act. 15 U.S.C. Section 1 *et seq.;*

3) Has been convicted of bid-rigging or attempting to rig bids under the laws of federal, state or local government;

4) Has been convicted of an act committed, within the State, of price-fixing or attempting to fix prices as defined by the Sherman Anti-Trust Act and the Clayton Act. 15 U.S.C. Section 1, *et seq.;*

5) Has been convicted of price-fixing or attempting to fix prices under the laws the State;

6) Has been convicted of defrauding or attempting to defraud any unit of state or local government or school district within the State of Illinois;

7) Has made an admission of guilt of such conduct as set forth in subsections (1) through (6) above which admission is a matter of record, whether or not such person or business entity was subject to prosecution for the offense or offenses admitted to; or

8) Has entered a plea of *nolo contendere* to charge of bribery, price-fixing, bid-rigging, or fraud, as set forth in sub-paragraphs (1) through (6) above.

In the case of bribery or attempting to bribe, a business entity may not be awarded a contract if an official, agent or employee of such business entity committed the Prohibited Act on behalf of the business entity and pursuant to the direction or authorization of an officer, director or other responsible official of the business entity, and such Prohibited Act occurred within three years prior to the award of the contract. In addition, a business entity shall be disqualified if an owner, partner or shareholder controlling, directly or indirectly, 20 % or more of the business entity or an officer of the business entity has performed any Prohibited Act within five years prior to the award of the Contract.

THE UNDERSIGNED HEREBY CERTIFIES THAT: The Undersigned has read the provisions of Section A, Persons and Entities Subject to Disqualification, that the Undersigned has not committed any Prohibited Act set forth in Section A, and that award of the Contract to the Undersigned would not violate the provisions of such Section or of the Code.

B. BID-RIGGING OR BID ROTATING

THE UNDERSIGNED HEREBY CERTIFIES THAT: *In accordance with 720 ILCS 5/33 E-11, neither the Undersigned nor any Affiliated Entity is barred from award of this Contract as a result of a conviction for the violation of State laws prohibiting bid-rigging or bid rotating.*

C. DRUG FREE WORKPLACE ACT

THE UNDERSIGNED HEREBY CERTIFIES THAT: The Undersigned will provide a drug free workplace, as required by Public Act 86-1459 (30 ILCS 580/2-11).

D. DELINQUENCY IN PAYMENT OF TAXES

THE UNDERSIGNED HEREBY CERTIFIES THAT: *The Undersigned is not an owner or a party responsible for the payment of any tax or fee administered by Cook County, by a local municipality, or by the Illinois Department of Revenue, which such tax or fee is delinquent, such as bar award of a contract or subcontract pursuant to the Code, Chapter 34, Section 34-129.*

E. HUMAN RIGHTS ORDINANCE

No person who is a party to a contract with Cook County ("County") shall engage in unlawful discrimination or sexual harassment against any individual in the terms or conditions of employment, credit, public accommodations, housing, or provision of County facilities, services or programs (Code Chapter 42, Section 42-30 *et seq*).

F. ILLINOIS HUMAN RIGHTS ACT

THE UNDERSIGNED HEREBY CERTIFIES THAT: *It is in compliance with the the Illinois Human Rights Act (775 ILCS 5/2-105), and agrees to abide by the requirements of the Act as part of its contractual obligations.*

G. MACBRIDE PRINCIPLES, CODE CHAPTER 34, SECTION 34-132

If the primary contractor currently conducts business operations in Northern Ireland, or will conduct business during the projected duration of a County contract, the primary contractor shall make all reasonable and good faith efforts to conduct any such business operations in Northern Ireland in accordance with the MacBride Principles for Northern Ireland as defined in Illinois Public Act 85-1390.

H. LIVING WAGE ORDINANCE PREFERENCE (COOK COUNTY CODE, CHAPTER 34, SECTION 34-127;

The Code requires that a living wage must be paid to individuals employed by a Contractor which has a County Contract and by all subcontractors of such Contractor under a County Contract, throughout the duration of such County Contract. The amount of such living wage is determined from time to time by, and is available from, the Chief Financial Officer of the County.

For purposes of this EDS Section 4, H, "Contract" means any written agreement whereby the County is committed to or does expend funds in connection with the agreement or subcontract thereof. The term "Contract" as used in this EDS, Section 4, I, specifically excludes contracts with the following:

1) Not-For Profit Organizations (defined as a corporation having tax exempt status under Section 501(C)(3) of the United State Internal Revenue Code and recognized under the Illinois State not-for - profit law);

2) Community Development Block Grants;

3) President's Office of Employment Training;

4) Sheriff's Work Alternative Program; and

5) Department of Correction inmates.

REQUIRED DISCLOSURES
(SECTION 5)

1. DISCLOSURE OF LOBBYIST CONTACTS

List all persons or entities that have made lobbying contacts on your behalf with respect to this contract:

Name Address

None

2. LOCAL BUSINESS PREFERENCE DISCLOSURE; CODE, CHAPTER 34, SECTION 34-151(p);

"Local Business" shall mean a person authorized to transact business in this State and having a bona fide establishment for transacting business located within Cook County at which it was actually transacting business on the date when any competitive solicitation for a public contract is first advertised or announced and further which employs the majority of its regular, full time work force within Cook County, including a foreign corporation duly authorized to transact business in this State and which has a bona fide establishment for transacting business located within Cook County at which it was actually transacting business on the date when any competitive solicitation for a public contract is first advertised or announced and further which employs the majority of its regular, full time work force within Cook County.

a) Is Bidder a "Local Business" as defined above?

Yes:_____ No:✓

b) If yes, list business addresses (es) within Cook County:

c) Does Bidder employ the majority of its regular full-time workforce within Cook County?

Yes:_____ No:✓

3. THE CHILD SUPPORT ENFORCEMENT ORDINANCE (PREFERENCE (CODE, CHAPTER 34, SECTION 34-366)

Every Applicant for a County Privilege shall be in full compliance with any child support order before such Applicant is entitled to receive or renew a County Privilege. When delinquent child support exists, the County shall not issue or renew any County Privilege, and may revoke any County Privilege. All Applicants are required to review the Cook County Affidavit of Child Support Obligations attached to this EDS **and** complete the following, based upon the definitions and other information included in such Affidavit:

_____ Applicant has no "Substantial Owner."

OR

✓ The Cook County Affidavit of Child Support Obligations has been completed by all "Substantial Owners" and is attached to this EDS.

4. REAL ESTATE OWNERSHIP DISCLOSURES.

The Undersigned must indicate by checking the appropriate provision below and providing all required information that either:

a)_____The following is a complete list of all real estate owned by the Undersigned in Cook County:

PERMANENT INDEX NUMBER(S): _____

_____

_____

(ATTACH SHEET IF NECESSARY TO LIST ADDITIONAL INDEX NUMBERS)

OR:

b)__✓__The Undersigned owns no real estate in Cook County.

5. EXCEPTIONS TO CERTIFICATIONS OR DISCLOSURES.

If the Undersigned is unable to certify to any of the Certifications or any other statements contained in this EDS and not explained elsewhere in this EDS, the Undersigned must explain below:

NONE

If the letters, "NA", the word "None" or "No Response" appears above, or if the space is left blank, it will be conclusively presumed that the Undersigned certified to all Certifications and other statements contained in this EDS.

COOK COUNTY DISCLOSURE OF OWNERSHIP INTEREST STATEMENT
(Section 5)

The Cook County Code of Ordinances (§2-610 *et seq.*) requires that any Applicant for any County Action must disclose information concerning ownership interests in the Applicant. This Disclosure of Ownership Interest Statement must be completed with all information current as of the date this Statement is signed. Furthermore, this Statement must be kept current, by filing an amended Statement, until such time as the County Board or County Agency shall take action on the application. The information contained in this Statement will be maintained in a database and made available for public viewing.

If you are asked to list names, but there are no applicable names to list, you must state NONE. An incomplete Statement will be returned and any action regarding this contract will be delayed. A failure to fully comply with the ordinance may result in the action taken by the County Board or County Agency being voided.

"*Applicant*" means any Entity or person making an application to the County for any County Action.

"County Action" means any action by a County Agency, a County Department, or the County Board regarding an ordinance or ordinance amendment, a County Board approval, or other County agency approval, with respect to contracts, leases, or sale or purchase of real estate.

"Entity" or *"Legal Entity"* means a sole proprietorship, corporation, partnership, association, business trust, estate, two or more persons having a joint or common interest, trustee of a land trust, other commercial or legal entity or any beneficiary or beneficiaries thereof.

This Disclosure of Ownership Interest Statement must be submitted by :

1. An Applicant for County Action and
2. An individual or Legal Entity that holds stock or a beneficial interest in the Applicant and is listed on the Applicant's Statement (a "Holder") must file a Statement and complete #1 only under **Ownership Interest Declaration**.

Please print or type responses clearly and legibly. Add additional pages if needed, being careful to identify each portion of the form to which each additional page refers.

This Statement is being made by the [X] Applicant or [ ] Stock/Beneficial Interest Holder

This Statement is an: [X] Original Statement or [ ] Amended Statement

Identifying Information:

Name D. Construction, Inc. D/B/A: _____ EIN NO.: 36-3170008

Street Address: 1488 S. Broadway

City: Coal City State: IL Zip Code: 60416

Phone No.: (815) 634-2555

Form of Legal Entity:

[ ] Sole Proprietor [ ] Partnership [X] Corporation [ ] Trustee of Land Trust

[ ] Business Trust [ ] Estate [ ] Association [ ] Joint Venture

[ ] Other (describe) _____

Ownership Interest Declaration:

1. List the name(s), address, and percent ownership of each individual and each Entity having a legal or beneficial interest (including ownership) of more than five percent (5%) in the Applicant/Holder.

Name	Address	Percentage Interest in Applicant/Holder
Kenneth Sandeno	5540 Bayview Dr., Morris, IL 60450	33 1/3 %
Todd Sandeno	5550 Bayview Dr., Morris, IL 60450	33 1/3 %
Tamara L. Hansen	207 S. Grundy, Gardner, IL 60424	33 1/3 %

2. If the interest of any individual or any Entity listed in (1) above is held as an agent or agents, or a nominee or nominees, list the name and address of the principal on whose behalf the interest is held.

Name of Agent/Nominee	Name of Principal	Principal's Address
N/A		

3. Is the Applicant constructively controlled by another person or Legal Entity? [ ] Yes [X] No

If yes, state the name, address and percentage of beneficial interest of such person or legal entity, and the relationship under which such control is being or may be exercised.

Name	Address	Percentage of Beneficial Interest	Relationship

Declaration (check the applicable box):

[X] I state under oath that the Applicant has withheld no disclosure as to ownership interest in the Applicant nor reserved any information, data or plan as to the intended use or purpose for which the Applicant seeks County Board or other County Agency action.

[ ] I state under oath that the Holder has withheld no disclosure as to ownership interest nor reserved any information required to be disclosed.

Kenneth Sandeno
Name of Authorized Applicant/Holder Representative (please print or type)

President
Title

Signature

4/23/14
Date

eleasure@dconstruction.net
E-mail address

(815) 634-2555
Phone Number

Subscribed to and sworn before me this 23rd day of April, 2014.

My commission expires: 11/17/14

X
Notary Public Signature

OFFICIAL SEAL
LORI A PINARD
NOTARY PUBLIC - STATE OF ILLINOIS
MY COMMISSION EXPIRES:11/17/14

COOK COUNTY BOARD OF ETHICS
69 W. WASHINGTON STREET, SUITE 3040
CHICAGO, ILLINOIS 60602
312/603-4304
312/603-9988 FAX 312/603-1011 TT/TDD

FAMILIAL RELATIONSHIP DISCLOSURE PROVISION:

Section 2-582 of the Cook County Ethics Ordinance requires any person or persons doing business with Cook County, upon execution of a contract with Cook County, to disclose to the Cook County Board of Ethics the existence of familial relationships they may have with all persons holding elective office in the State of Illinois, the County of Cook, or in any municipality within the County of Cook.

The required disclosure shall be filed by January 1 of each calendar year and again with each bid/proposal/quotation to do business with Cook County. Any person filing a late disclosure statement after January 31 shall be assessed a late filing fee of $100.00 per day that the disclosure is late. Any person found guilty of violating any provision of this section or knowingly filing a false, misleading, or incomplete disclosure to the Cook County Board of Ethics shall be prohibited, for a period of three (3) years, from engaging, directly or indirectly, in any business with Cook County. *Note*: Please see Chapter 2 Administration, Article VII Ethics, Section 2-582 of the Cook County Code to view the full provisions of this section.

If you have questions concerning this disclosure requirement, please call the Cook County Board of Ethics at (312) 603-4304. *Note*: A current list of contractors doing business with Cook County is available via the Cook County Board of Ethics' website at: **http://www.cookcountygov.com/taxonomy/ethics/Listings/cc_ethics_VendorList_.pdf**

DEFINITIONS:

"*Calendar year*" means January 1 to December 31 of each year.

"*Doing business*" for this Ordinance provision means any one or any combination of leases, contracts, or purchases to or with Cook County or any Cook County agency in excess of $25,000 in any calendar year.

"*Familial relationship*" means a person who is related to an official or employee as spouse or any of the following, whether by blood, marriage or adoption:

- Parent
- Child
- Brother
- Sister
- Aunt
- Uncle
- Niece
- Nephew
- Grandparent
- Grandchild
- Father-in-law
- Mother-in-law
- Son-in-law
- Daughter-in-law
- Brother-in-law
- Sister-in-law
- Stepfather
- Stepmother
- Stepson
- Stepdaughter
- Stepbrother
- Stepsister
- Half-brother
- Half-sister

"*Person*" means any individual, entity, corporation, partnership, firm, association, union, trust, estate, as well as any parent or subsidiary of any of the foregoing, and whether or not operated for profit.

SWORN FAMILIAL RELATIONSHIP DISCLOSURE FORM

Pursuant to Section 2-582 of the Cook County Ethics Ordinance, any *person* doing business** with Cook County must disclose, to the Cook County Board of Ethics, the existence of *familial relationships** to any person holding elective office in the State of Illinois, Cook County, or in any municipality within Cook County. Please print your responses.

Name of Owner/Employee: Kenneth Sandeno Title: President

Business Entity Name: D. Construction, Inc. Phone: (815) 634-2555

Business Entity Address: 1488 S. Broadway, Coal City, IL 60416

_____ The following familial relationship exists between the owner or any employee of the business entity contracted to do business with Cook County ***and*** any person holding elective office in the State of Illinois, Cook County, or in any municipality within Cook County.

	Owner/Employee Name:	Related to:	Relationship:
1.			
2.			
3.			
4.			
5.			

If more space is needed, attach an additional sheet following the above format.

X There is ***no*** familial relationship that exists between the owner or any employee of the business entity contracted to do business with Cook County and any person holding elective office in the State of Illinois, Cook County, or in any municipality within Cook County.

To the best of my knowledge and belief, the information provided above is true and complete.

Owner/Employee's Signature — Date: 4/23/14

Subscribe and sworn before me this 23rd Day of April, 20 14

a Notary Public in and for Grundy County

(Signature)

NOTARY SEAL

OFFICIAL SEAL
LORI A PIERARD
NOTARY PUBLIC - STATE OF ILLINOIS
MY COMMISSION EXPIRES:11/17/14

My Commission expires 11/17/14

Completed forms must be filed with the bid.

CONTRACTOR'S CERTIFICATION CONCERNING LABOR STANDARDS AND PREVAILING WAGE REUIREMENTS

(SECTION 6)

To Contractor:

Date: 4/23/14
Project Number: 1428-13429
Project Name Pavement Resurfacing Enhancement Program - South 2014

1. If awarded the contract with the County of Cook for the construction of the above identified project, the undersigned agrees that:

   (a) The Labor Standards provisions of the Contract for Construction are included in the aforesaid contract.

   (b) Correction of any infractions of the aforesaid conditions, including infractions by any of his Subcontractors and any lower tier subcontractors, is his responsibility.

2. He certifies that:

   (b) Neither he nor any firm, corporation, partnership or association in which he has a substantial interest is designated as an ineligible contractor by the Comptroller General of the United States pursuant to Section 5.6(b) of the Regulations of the Secretary of Labor, Part 5 (29CFR Part 5) or pursuant to the Section 3(a) of the Davis-Bacon Act, as amended [40 U.S.C. 276a-2(a)]

   (c) No part of the aforementioned Contract has been or will be subcontracted to any Subcontractor if such Subcontractor or any firm, corporation, partnership or association in which such Subcontractor has a substantial interest is designated as an ineligible Contractor pursuant to any of the aforementioned regulatory or statutory provisions.

3. He agrees to obtain and forward to the aforementioned recipient within ten days after the execution of any subcontract, including those executed by his Subcontractor any lower tier subcontractor, a Subcontractor's Certification Concerning Labor Standards and Prevailing Wages Requirements executed by the Subcontractors.

4. **He certifies that:**

   (a) The legal name and the business address of the undersigned are: D. Construction, Inc.
   1488 S. Broadway
   Coal City, IL 60416

   (b) The undersigned is (check one):
   ____ Sole Proprietorship
   ____ Partnership
   ✓ Corporation
   ____ Other Organization (Describe)

   (c) The name, title and address of the owner, partners or officers of the undersigned are:

NAME	TITLE	ADDRESS
Kenneth Sandeno	President	5540 Bayview Dr, Morris, IL 60450
Todd Sandeno	Vice-President	5550 Bayview Dr, Morris, IL 60450
Tamara L. Hanson	Sec/Treas	207 S. Grundy, Gardner, IL 60424

(d) The name and address of all other persons, both natural and corporate, having a substantial interest in the undersigned, and the nature of the interest are (if none, so state):

NAME	ADDRESS	NATURE OF INTEREST
None		

(e) The names and addresses and trade classifications of all other building construction contractors in which the undersigned has a substantial interest is (if none, so state):

NAME	ADDRESS	TRADE CLASSIFICATION
None		

DATE 4/23/14

D. Construction, Inc
CONTRACTOR

X
SIGNATURE Kenneth Sanders
President

200
~~196~~

SUBCONTRACTOR'S CERTIFICATION CONCERNING
LABOR STANDARDS AND PREVAILING WAGE REQUIREMENTS
(Section 6)

To Contractor:

Date: 4-22-14
Project Number: 13-PREPS-01-RS
Project Name Pavement Marking Enhancement Program 2014

1. The undersigned, if awarded a contract with D Construction, Inc. (Contractor)

_____ for Trucking (Nature of Work)

_____ in the amount of $ 93,100.- in the construction of the above-identified project, certifies that:

(a) The Labor Standards provisions of the Contract for Construction are included in the aforesaid contract.

(b) Neither he nor any firm, corporation, partnership or association in which he has a substantial interest is designated as an ineligible contractor by the Comptroller General of the United States pursuant to Section 5.6(b) of the Regulations of the Secretary of Labor, Part 5 (29CFR Part 5) or pursuant to the Section 3(a) of the Davis-Bacon Act, as amended [40 U.S.C. 276a-2(a)]

(c) No part of the aforementioned Contract has been or will be subcontracted to any Subcontractor if such Subcontractor or any firm, corporation, partnership or association in which such Subcontractor has a substantial interest is designated as an ineligible Contractor pursuant to any of the aforementioned regulatory or statutory provisions.

2. He agrees to obtain and forward to the aforementioned recipient within ten days after the execution of any subcontract, including those executed by his Subcontractor any lower tier subcontractor, a Subcontractor's Certification Concerning Labor Standards and Prevailing Wages Requirements executed by the Subcontractors.

3. The workmen will report for duty on As prime (Date)

4. He certifies that: AMS Earth Movers, Inc 39555 N Hwy 83, Lake Villa, IL 60046

(a) The legal name and the business address of the undersigned are:

(b) The undersigned is (check one):
- ___ Sole Proprietorship
- ___ Partnership
- X Corporation
- ___ Other Organization (Describe)

(c) The name and address of the owner, partners or officers of the undersigned are:

NAME	TITLE	ADDRESS
Julie Savitt	President	39555 N Hwy 83, Lake Villa, IL 60046

DATE 4/22/2014

SUBCONTRACTOR
X _____ Estimator
SIGNATURE

200

SUBCONTRACTOR'S CERTIFICATION CONCERNING LABOR STANDARDS AND PREVAILING WAGE REQUIREMENTS

(Section 6)

To Contractor:

Date: 4-22-14
Project Number: 13-PREPS-01-RS
Project Name Pavement Resurfacing Enhancement Program - South 2014

1. The undersigned, if awarded a contract with D Construction, Inc. (Contractor)

_____ for Trucking (Nature of Work)

_____ in the amount of $ 223,376 in the construction of the above-identified project, certifies that:

(a) The Labor Standards provisions of the Contract for Construction are included in the aforesaid contract.

(b) Neither he nor any firm, corporation, partnership or association in which he has a substantial interest is designated as an ineligible contractor by the Comptroller General of the United States pursuant to Section 5.6(b) of the Regulations of the Secretary of Labor, Part 5 (29CFR Part 5) or pursuant to the Section 3(a) of the Davis-Bacon Act, as amended [40 U.S.C. 276a-2(a)]

(c) No part of the aforementioned Contract has been or will be subcontracted to any Subcontractor if such Subcontractor or any firm, corporation, partnership or association in which such Subcontractor has a substantial interest is designated as an ineligible Contractor pursuant to any of the aforementioned regulatory or statutory provisions.

2. He agrees to obtain and forward to the aforementioned recipient within ten days after the execution of any subcontract, including those executed by his Subcontractor any lower tier subcontractor, a Subcontractor's Certification Concerning Labor Standards and Prevailing Wages Requirements executed by the Subcontractors.

3. The workmen will report for duty on per prime (Date)

4. He certifies that:

(a) The legal name and the business address of the undersigned are:

(b) The undersigned is (check one):
- ___ Sole Proprietorship
- ___ Partnership
- X Corporation
- ___ Other Organization (Describe)

(c) The name and address of the owner, partners or officers of the undersigned are:

NAME TITLE ADDRESS
J. Jasso Trucking, Company / Jose Jasso / President
5719 S. Homan Ave
Chicago, IL 60629

DATE 4-22-14

SUBCONTRACTOR
X Jose Jasso
SIGNATURE

SIGNATURE BY A SOLE PROPRIETOR
(SECTION 6)

The Undersigned hereby certifies and warrants: that all of the statements, certifications and representations set forth in this EDS are true, complete and correct; that the Undersigned is in full compliance and will continue to be in compliance throughout the term of the Contract or County Privilege issued to the Undersigned with all the policies and requirements set forth in this EDS; and that all facts and information provided by the Undersigned in this EDS are true, complete and correct. The Undersigned agrees to inform the Cook County Chief Procurement Officer in writing if any of such statements, certifications, representations, facts or information becomes or is found to be untrue, incomplete or incorrect during the term of the Contract or County Privilege.

BUSINESS NAME:_____

BUSINESS ADDRESS:_____

_____

BUSINESS TELEPHONE:_____ FAX NUMBER:_____

FEIN/SSN:_____

COOK COUNTY BUSINESS REGISTRATION NUMBER:_____

SOLE PROPRIETOR'S SIGNATURE: _____

PRINT NAME: _____

DATE: _____

Subscribed to and sworn before me this

_____ day of _____, 20___.

My commission expires:

X_____ _____

Notary Public Signature Notary Seal

SIGNATURE BY A PARTNERSHIP (AND/OR A JOINT VENTURE)
(SECTION 7)

The Undersigned hereby certifies and warrants: that all of the statements, certifications, and representations set forth in this EDS are true, complete and correct; that the Undersigned is in full compliance and will continue to be in compliance throughout the term of the Contract or County Privilege issued to the Undersigned with all the policies and requirements set forth in this EDS; and that all of the facts and information provided by the Undersigned in this EDS are true, complete and correct. The Undersigned agrees to inform the Cook County Chief Procurement Officer in writing if any of such statements, certifications, representations, facts or information becomes or is found to be untrue, incomplete or incorrect during the term of the Contract or County Privilege. .

BUSINESS NAME:_____

BUSINESS ADDRESS:_____

_____

BUSINESS TELEPHONE:_____ FAX NUMBER:_____

CONTACT PERSON:_____ FEIN/SSN:_____

*COOK COUNTY BUSINESS REGISTRATION NUMBER:_____

SIGNATURE OF PARTNER AUTHORIZED TO EXECUTE CONTRACTS ON BEHALF OF PARTNERSHIP:

*BY: _____

Date:_____

Subscribed to and sworn before me this

_____ day of _____, 20___.

My commission expires:

X_____ _____

Notary Public Signature Notary Seal

* **Attach hereto a partnership resolution or other document authorizing the individual signing this Signature Page to so sign on behalf of the Partnership.**

SIGNATURE BY A CORPORATION
(SECTION 8)

The Undersigned hereby certifies and warrants: that all of the statements, certifications, and representations set forth in this EDS are true, complete and correct; that the Undersigned is in full compliance and will continue to be in compliance throughout the term of the Contract or County Privilege issued to the Undersigned with all the policies and requirements set forth in this EDS; and that all of the facts and information provided by the Undersigned in this EDS are true, complete and correct. The Undersigned agrees to inform the Cook County Chief Procurement Officer in writing if any of such statements, certifications, representations, facts or information becomes or is found to be untrue, incomplete or incorrect during the term of the Contract or County Privilege.

BUSINESS NAME: D. Construction, Inc.

BUSINESS ADDRESS: 1488 S. Broadway
Coal City, IL 60416

BUSINESS TELEPHONE: (815) 634-2555 FAX NUMBER: (815) 634-8748

CONTACT PERSON: Everett Leasure

FEIN: 36-3170008 *IL CORPORATE FILE NUMBER: D5268-839-6

LIST THE FOLLOWING CORPORATE OFFICERS:

PRESIDENT: Kenneth Sandeno VICE PRESIDENT: Todd Sandeno

SECRETARY: Tamara L. Hansen TREASURER: Tamara L. Hansen

**SIGNATURE OF PRESIDENT:

**ATTEST: (CORPORATE SECRETARY)

Subscribed and sworn to before me this

23rd day of April, 2014.

My commission expires: 11/17/14

X
Notary Public Signature

OFFICIAL SEAL
LORI A PIERARD
NOTARY PUBLIC - STATE OF ILLINOIS
MY COMMISSION EXPIRES:11/17/14
Notary Seal

* **If the corporation is not registered in the State of Illinois, a copy of the Certificate of Good Standing from the state of incorporation must be submitted with this Signature Page.**

** **In the event that this Signature Page is signed by any persons than the President and Secretary, attach either a certified copy of the corporate by-laws, resolution or other authorization by the corporation, authorizing such persons to sign the Signature Page on behalf of the corporation.**

COOK COUNTY SIGNATURE PAGE
(SECTION 9)

ON BEHALF OF THE COUNTY OF COOK, A BODY POLITIC AND CORPORATE OF THE STATE OF ILLINOIS, THIS CONTRACT IS HEREBY EXECUTED BY:

CHIEF PROCUREMENT OFFICER

DATED AT CHICAGO, ILLINOIS THIS 25 DAY OF June, 2014.

IN THE CASE OF A BID, THE COUNTY HEREBY ACCEPTS:

THE FOREGOING BID AS IDENTIFIED IN THE CONTRACT DOCUMENTS FOR CONTRACT NUMBER

1428-13429

OR

ITEM(S), SECTION(S), PART(S): Section No.: 13-PREPS-01-RS

TOTAL AMOUNT OF CONTRACT: $ 1,785,391.57
(DOLLARS AND CENTS)

FUND CHARGEABLE:

APPROVED AS TO FORM:

ASSISTANT STATE'S ATTORNEY

APPROVED BY BOARD OF
COOK COUNTY COMMISSIONERS

JUN 18 2014

COM

SURETY'S STATEMENT
of
QUALIFICATION FOR BONDING
(Section 10)

This document must be accurately executed (by the Surety Company) and yielded as part of this Bid.

IF THIS DOCUMENT IS NOT ACCURATELY EXECUTED AND SUBMITTED WITH THE BID PACKAGE, THIS CONSTITUTES CAUSE FOR DISQUALIFICATION OF THE VENDOR FROM BIDDING ON THIS CONTRACT.

The undersigned confirms that: Liberty Mutual Insurance Company
(SURETY COMPANY)

would execute a Performance/Payment Bond in favor of the County of Cook for the full amount of the bid/contract: 1428-13429
(NUMBER)

to: D. Construction, Inc.
(BIDDER)

The penalty of this bond is to be $ $1,785,391.57
(TOTAL DOLLAR AMOUNT OF CONTRACT)

SURETY

R L McWethy
(SURETY COMPANY'S AUTHORIZED SIGNATURE)

CORPORATE

R.L. McWethy
(ATTORNEY-IN-FACT)

002283 23043
AMB # NAIC

SEAL

S POWER OF ATTORNEY IS NOT VALID UNLESS IT IS PRINTED ON RED BACKGROUND.
his Power of Attorney limits the acts of those named herein, and they have no authority to bind the Company except in the manner and to the extent herein stated.

Certificate No. 6258929

American Fire and Casualty Company
The Ohio Casualty Insurance Company
Liberty Mutual Insurance Company
West American Insurance Company

POWER OF ATTORNEY

KNOWN ALL PERSONS BY THESE PRESENTS: That American Fire & Casualty Company and The Ohio Casualty Insurance Company are corporations duly organized under the laws of the State of New Hampshire, that Liberty Mutual Insurance Company is a corporation duly organized under the laws of the State of Massachusetts, and West American Insurance Company is a corporation duly organized under the laws of the State of Indiana (herein collectively called the "Companies"), pursuant to and by authority herein set forth, does hereby name, constitute and appoint, Gary A. Eaton; Kevin J. Scanlon; R. L. McWethy; Bob W. Kegley Jr; Robert H. Walker

all of the city of New Lenox, state of IL each individually if there be more than one named, its true and lawful attorney-in-fact to make, execute, seal, acknowledge and deliver, for and on its behalf as surety and as its act and deed, any and all undertakings, bonds, recognizances and other surety obligations, in pursuance of these presents and shall be as binding upon the Companies as if they have been duly signed by the president and attested by the secretary of the Companies in their own proper persons.

IN WITNESS WHEREOF, this Power of Attorney has been subscribed by an authorized officer or official of the Companies and the corporate seals of the Companies have been affixed thereto this 22nd day of August, 2013.

American Fire and Casualty Company
The Ohio Casualty Insurance Company
Liberty Mutual Insurance Company
West American Insurance Company

By: _____
Gregory W. Davenport, Assistant Secretary

STATE OF WASHINGTON ss
COUNTY OF KING

On this 22nd day of August, 2013, before me personally appeared Gregory W. Davenport, who acknowledged himself to be the Assistant Secretary of American Fire and Casualty Company, Liberty Mutual Insurance Company, The Ohio Casualty Company, and West American Insurance Company, and that he, as such, being authorized so to do, execute the foregoing instrument for the purposes therein contained by signing on behalf of the corporations by himself as a duly authorized officer.

IN WITNESS WHEREOF, I have hereunto subscribed my name and affixed my notarial seal at Seattle, Washington, on the day and year first above written.

K D RILEY NOTARY PUBLIC STATE OF WASHINGTON COMM. EXP. 12-09-2013

By: _____
KD Riley , Notary Public

This Power of Attorney is made and executed pursuant to and by authority of the following By-laws and Authorizations of American Fire and Casualty Company, The Ohio Casualty Insurance Company, Liberty Mutual Insurance Company, and West American Insurance Company which resolutions are now in full force and effect reading as follows:

ARTICLE IV – OFFICERS – Section 12. Power of Attorney. Any officer or other official of the Corporation authorized for that purpose in writing by the Chairman or the President, and subject to such limitation as the Chairman or the President may prescribe, shall appoint such attorneys-in-fact, as may be necessary to act in behalf of the Corporation to make, execute, seal, acknowledge and deliver as surety any and all undertakings, bonds, recognizances and other surety obligations. Such attorneys-in-fact, subject to the limitations set forth in their respective powers of attorney, shall have full power to bind the Corporation by their signature and execution of any such instruments and to attach thereto the seal of the Corporation. When so executed, such instruments shall be as binding as if signed by the President and attested to by the Secretary. Any power or authority granted to any representative or attorney-in-fact under the provisions of this article may be revoked at any time by the Board, the Chairman, the President or by the officer or officers granting such power or authority.

ARTICLE XIII – Execution of Contracts – SECTION 5. Surety Bonds and Undertakings. Any officer of the Company authorized for that purpose in writing by the chairman or the president, and subject to such limitations as the chairman or the president may prescribe, shall appoint such attorneys-in-fact, as may be necessary to act in behalf of the Company to make, execute, seal, acknowledge and deliver as surety any and all undertakings, bonds, recognizances and other surety obligations. Such attorneys-in-fact subject to the limitations set forth in their respective powers of attorney, shall have full power to bind the Company by their signature and execution of any such instruments and to attach thereto the seal of the Company. When so executed such instruments shall be as binding as if signed by the president and attested by the secretary.

Certificate of Designation – The President of the Company, acting pursuant to the Bylaws of the Company, authorizes Gregory W. Davenport, Assistant Secretary to appoint such attorneys-in-fact as may be necessary to act on behalf of the Company to make, execute, seal, acknowledge and deliver as surety any and all undertakings, bonds, recognizances and other surety obligations.

Authorization – By unanimous consent of the Company's Board of Directors, the Company consents that facsimile or mechanically reproduced signature of any assistant secretary of the Company, wherever appearing upon a certified copy of any power of attorney issued by the Company in connection with surety bonds, shall be valid and binding upon the Company with the same force and effect as though manually affixed.

I, David M. Carey, the undersigned, Assistant Secretary, of American Fire and Casualty Company, The Ohio Casualty Insurance Company, Liberty Mutual Insurance Company, and West American Insurance Company do hereby certify that the original power of attorney of which the foregoing is a full, true and correct copy of the Power of Attorney executed by said Companies, is in full force and effect and has not been revoked.

IN TESTIMONY WHEREOF, I have hereunto set my hand and affixed the seals of said Companies this 23rd day of April, 2014.

By: _____
David M. Carey, Assistant Secretary

Not valid for mortgage, note, loan, letter of credit, currency rate, interest rate or residual value guarantees.

To confirm the validity of this Power of Attorney call 1-610-832-8240 between 9:00 am and 4:30 pm EST on any business day.

STATE OF Illinois

ss.:

COUNTY OF WILL

On this 23rd day of April 2014, before me personally appeared R.L. McWethy, to me known, who, being by me duly sworn, did depose and say: that he reside(s) at New Lenox, Illinois; that he is/are the Attorney-in-fact of Liberty Mutual Insurance Company, the corporation described in and which executed and annexed instrument; that he know(s) the corporate seal of said corporation; that the seal affixed to said instrument is such corporate seal; that it was so affixed by order of the Board of Directors of said corporation; that he signed the same name(s) thereto by like order; and that the liabilities of said corporation do not exceed its assets as ascertained in the manner provided by law.

Surety Company Acknowledgment

"OFFICIAL SEAL"
Sherry Bacskai
Notary Public, State of Illinois
My Commission Expires October 22, 2015

(Notary Public in and for the above County and State)

Bond-3768-A

My commission expires 10/22/2015

COOK COUNTY DEPARTMENT OF TRANSPORTATION AND HIGHWAYS
TRUST AGREEMENT

THIS TRUST AGREEMENT is made and entered into by and between the County of Cook, by and through the Department of Transportation and Highways, whose address is 69 West Washington, Suite 2300, Chicago, Illinois, 60602, hereinafter called the COUNTY, and D. Construction, Inc. whose address is 1488 So. Broadway, Coal City, IL hereinafter called the CONTRACTOR, and First Midwest Bank, a FINANCIAL INSTITUTION or trust company located in Cook County, whose deposits are insured by an agency or instrumentality of the federal government and whose address is 12600 S. Harlem Ave, Palos Heights, IL, phone number (815) 941-2184 hereinafter called the FINANCIAL INSTITUTION. Contact person being Thomas Tesdal.

WITNESSETH:

WHEREAS the COUNTY has awarded to the CONTRACTOR Cook County Contract Number **1428-13429, PAVEMENT RESURFACING ENHANCEMENT PROGRAM – SOUTH 2014** (Cottage Grove – Lincoln Highway to Glenwood-Lansing Road; Kedzie Avenue – 158th Street to 155th Street; Steger Road – Harlem Avenue to Cicero Avenue; 139th Street – Coopers Grove Road to Harrison Avenue) Section Number **13-PREPS-01-RS** providing for the construction of a COUNTY highway improvement for a total price of $ 1,785,391.57 dollars; and
(Total Amount of Contract Awarded)

WHEREAS under Section 5-409 of the Illinois Highway Code, as amended, the COUNTY is authorized to make progress payments as the CONTRACTOR performs the work under the contract and may retain a percentage of progress payments; and

WHEREAS the COUNTY may, at the request of CONTRACTOR, deposit the retainage under a Trust Agreement with a FINANCIAL INSTITUTION of the CONTRACTOR'S choice which is located in Cook County and has been approved for the deposit of such funds by the Superintendent of the Cook County Department of Transportation and Highways pursuant to Cook County Code Section 34-36; and

WHEREAS by execution of this Agreement, the CONTRACTOR and said FINANCIAL INSTITUTION request that the retainage be deposited with said FINANCIAL INSTITUTION as provided by law.

NOW THEREFORE, the parties do hereby agree that:

1. This Agreement shall not change any of the rights, duties, privileges or responsibilities of the parties to the above-referenced construction contract, except as may be provided herein.
2. Notwithstanding the provisions of this Agreement, the COUNTY may withhold progress payments or any portion thereof on account of lien claims, liquidated damages, or as may otherwise be provided by the above contract or by law.
3. All progress payments, including final payment under the above contract, shall be made by COUNTY warrants payable to the CONTRACTOR and FINANCIAL INSTITUTION, as trustee, jointly, and such payments shall be sent to the FINANCIAL INSTITUTION at the above address.
4. The progress payments shall specify on a copy of the COUNTY'S invoice to be mailed with the warrant the amount thereof to be paid to the CONTRACTOR and the amount to be held by the FINANCIAL INSTITUTION as retainage under this Agreement.

5. The money so held by the FINANCIAL INSTITUTION shall be described as "retainage" and shall be held in trust according to the terms of this Agreement. Interest earned on the retainage may be paid to the CONTRACTOR as it accrues or as the FINANCIAL INSTITUTION'S policy permits.

6. The principal balance of the retainage, or any part thereof, shall not be paid over to the CONTRACTOR except upon written directive to the FINANCIAL INSTITUTION by the COUNTY.

7. The FINANCIAL INSTITUTION may invest or reinvest said retainage in:

a. Certificates of Deposit issued by a financial institution whose principal office is located in Cook County, including this FINANCIAL INSTITUTION;

b. United States Government Bonds;

c. United States Treasury Notes;

d. United States Treasury Bills;

e. Time Deposit on Open Account.

Provided, however, that the investment of said retainage shall not relieve the FINANCIAL INSTITUTION from the return or repayment of such funds within ninety (90) days as provided in this Agreement.

8. Retainage is the property of the COUNTY until notice of final payment, and the principal amount, or any part thereof, shall not be pledged or used as security for any purpose.

9. The COUNTY shall be the sole judge of return or repayment of the funds to the Cook County Treasurer. Upon written demand made by the COUNTY to the FINANCIAL INSTITUTION for the return or repayment of the retainage, the FINANCIAL INSTITUTION shall make such return or repayment regardless of whether the COUNTY shall state any reason therefor and without imposition of any other requirements or conditions.

10. The repayment or return of retainage to the COUNTY shall be by check from the FINANCIAL INSTITUTION payable to the Treasurer of Cook County and shall be mailed to the COUNTY within ninety (90) days after the COUNTY'S demand.

11. The CONTRACTOR does not waive or release any rights he has against the COUNTY for breach of contract, including this Agreement, by reason of the repayment by the FINANCIAL INSTITUTION to the COUNTY on account of demand made by the COUNTY.

12. In the event demand for the retainage is made under this Agreement by the COUNTY, the COUNTY may specify, in its sole judgment, the amount to be repaid or returned as all or part of the principal balance of the retainage. This Agreement shall continue as to any retainage not returned to the COUNTY and any future payments by the COUNTY to the CONTRACTOR.

13. Upon return or repayment of the full principal balance of the retainage to the COUNTY, this Agreement shall terminate and have no further force or effect.

14. The COUNTY shall request confirmation of account balances as of June 30 of each year, and the FINANCIAL INSTITUTION shall comply with this request. The FINANCIAL INSTITUTION'S failure to comply with this provision shall be reason to demand return of the retainage pursuant to this Agreement.

15. The COUNTY shall provide notice of final payment to the FINANCIAL INSTITUTION and the CONTRACTOR. When said final payment is made, this Agreement shall be terminated and the retainage or interest thereon shall be paid to the CONTRACTOR by the FINANCIAL INSTITUTION. The COUNTY and the CONTRACTOR agree that the date of mailing such notice of final payment to the FINANCIAL INSTITUTION shall constitute the date of final payment to the CONTRACTOR under the contract. Any provisions of the contract regarding final payment shall be deemed to have been complied with regardless of any delay in the CONTRACTOR'S receiving said final payment or any retainage and interest thereon from the FINANCIAL INSTITUTION.

16. The FINANCIAL INSTITUTION shall look only to the CONTRACTOR to pay any costs or fees for either its services or expenses hereunder and no deduction shall be made therefor for any retainage or interest thereon except such deduction that may be made after final payment has been made.

17. Failure of the FINANCIAL INSTITUTION to comply with any of the terms of this Agreement shall be cause for the COUNTY to refuse approval of the FINANCIAL INSTITUTION as a party to any future Trust Agreements.

IN WITNESS WHEREOF the parties to this Trust Agreement have hereunder signed and executed this Trust Agreement this _____ day of _____, 20__.
(To be dated by the COUNTY.)

CONTRACTOR

D. Construction, Inc.
Company Name

By: _____
Printed Name: Kenneth Sandeno
Title: President

ATTEST: _____
Printed Name: Tamara L. Hansen
Title: Sec/Treas

CONTRACTOR (IF JOINT VENTURE)

_____
Company Name

By: _____
Printed Name: _____
Title: _____

ATTEST: _____
Printed Name: _____
Title: _____

CONTRACTOR (IF JOINT VENTURE)

_____
Company Name

By: _____
Printed Name: _____
Title: _____

ATTEST: _____
Printed Name: _____
Title: _____

CONTRACTOR (IF JOINT VENTURE)

_____
Company Name

By: _____
Printed Name: _____
Title: _____

ATTEST: _____
Printed Name: _____
Title: _____

FINANCIAL INSTITUTION
First Midwest Bank

By: _____
Printed Name: Thomas Tesdal
Title: President

ATTEST: _____
Printed Name: Janet Craig
Title: Senior Loan Admin

COOK COUNTY
DEPARTMENT OF TRANSPORTATION AND HIGHWAYS
By: _____
Superintendent

PERFORMANCE AND PAYMENT BOND TO THE COUNTY OF COOK

BOND #268005581

Know All Men by These Presents, That we, D. Construction, Inc.

as principle, and Liberty Mutual Insurance Company as surety,

are held and firmly bound unto the County of Cook in the penal sum of One Million Seven Hundred Eighty Five Thousand Three Hundred Ninety One & 57/100----- (Total Amount of Contract Awarded) Dollars ($ 1,785,391.57), lawful money of the United States of America, for the payment of which sum of money well and truly to be made, we bind ourselves, our respective heirs, executors, administrators, successors and assigns, firmly, by these presents.

Signed, sealed, and delivered this 19th day of May A.D. 20 14.

THE CONDITION OF THE ABOVE OBLIGATION IS SUCH, That whereas, the above bounded principle entered into a certain contract with the County of Cook, bearing date the day of **AWARD OF CONTRACT** for **PAVEMENT RESURFACING ENHANCEMENT PROGRAM – SOUTH 2014** (Cottage Grove – Lincoln Highway to Glenwood-Lancing Road; Kedzie Avenue – 158th Street to 155th Street; Steger Road – Harlem Avenue to Cicero Avenue; 139th Street – Coopers Grove Road to Harrison Avenue); Section **13-PREPS-01-RS; Various** Route(s); in **Various** Township(s); Cook County Contract No.**1428-13429**.

The terms and conditions of the Illinois Public Construction Bond Act, 30 ILCS 550

The terms and conditions of the Illinois Public Construction Bond Act, 30 ILCS 550 *et seq.* are hereby incorporated by reference.

It is hereby expressly understood and agreed, and made a condition hereof, that any judgment rendered in favor of any person not a party to said contract against the County of Cook in any suit arising out of said contract or its performance, when reasonable notice of the pendency of such suit shall have been given to said principle and to said surety, shall be conclusive against said principle and said surety as to both liability and amount.

In Witness Whereof, said parties hereto have caused this bond to be executed and delivered at Chicago, Illinois, all on the day and year first above written.

D. Construction, Inc.
PRINCIPAL/CONTRACTOR SEAL

By _____
PRESIDENT , Kenneth Sandeno

_____
SECRETARY, Tamara L. Hansen

Liberty Mutual Insurance Company
SURETY SEAL

By _____
SURETY/ATTORNEY-IN-FACT R.L. McWethy
(ATTACH POWER OF ATTORNEY)

002283 AMB#

23043 NAIC#

Approved as to form:

By: _____
ASSISTANT STATES ATTORNEY

PW5.18

STATE OF Illinois

COUNTY OF Will ss.:

On this 19th day of May 2014, before me personally appeared R.L. McWethy, to me known, who, being by me duly sworn, did depose and say: that he reside(s) at New Lenox, Illinois; that he is/are the Attorney-in-fact of Liberty Mutual Insurance Company, the corporation described in and which executed and annexed instrument; that he know(s) the corporate seal of said corporation; that the seal affixed to said instrument is such corporate seal; that it was so affixed by order of the Board of Directors of said corporation; that he signed the same name(s) thereto by like order; and that the liabilities of said corporation do not exceed its assets as ascertained in the manner provided by law.

Surety Company Acknowledgment

"OFFICIAL SEAL"
ELIZABETH CATLIN
Notary Public, State of Illinois
My Commission Expires 10/18/2017

Elizabeth Catlin
(Notary Public in and for the above County and State)

My commission expires 10/18/2017

Bond-3768-A

THIS POWER OF ATTORNEY IS NOT VALID UNLESS IT IS PRINTED ON RED BACKGROUND.
This Power of Attorney limits the acts of those named herein, and they have no authority to bind the Company except in the manner and to the extent herein stated.

Certificate No. 6259072

American Fire and Casualty Company
The Ohio Casualty Insurance Company
Liberty Mutual Insurance Company
West American Insurance Company

POWER OF ATTORNEY

KNOWN ALL PERSONS BY THESE PRESENTS: That American Fire & Casualty Company and The Ohio Casualty Insurance Company are corporations duly organized under the laws of the State of New Hampshire, that Liberty Mutual Insurance Company is a corporation duly organized under the laws of the State of Massachusetts, and West American Insurance Company is a corporation duly organized under the laws of the State of Indiana (herein collectively called the "Companies"), pursuant to and by authority herein set forth, does hereby name, constitute and appoint, Gary A. Eaton; Kevin J. Scanlon; R. L. McWethy; Rob W. Kegley Jr; Robert H. Walker

all of the city of New Lenox, state of IL each individually if there be more than one named, its true and lawful attorney-in-fact to make, execute, seal, acknowledge and deliver, for and on its behalf as surety and as its act and deed, any and all undertakings, bonds, recognizances and other surety obligations, in pursuance of these presents and shall be as binding upon the Companies as if they have been duly signed by the president and attested by the secretary of the Companies in their own proper persons.

IN WITNESS WHEREOF, this Power of Attorney has been subscribed by an authorized officer or official of the Companies and the corporate seals of the Companies have been affixed thereto this 22nd day of August, 2013.

American Fire and Casualty Company
The Ohio Casualty Insurance Company
Liberty Mutual Insurance Company
West American Insurance Company

By: _____
Gregory W. Davenport, Assistant Secretary

STATE OF WASHINGTON ss
COUNTY OF KING

On this 22nd day of August, 2013, before me personally appeared Gregory W. Davenport, who acknowledged himself to be the Assistant Secretary of American Fire and Casualty Company, Liberty Mutual Insurance Company, The Ohio Casualty Company, and West American Insurance Company, and that he, as such, being authorized so to do, execute the foregoing instrument for the purposes therein contained by signing on behalf of the corporations by himself as a duly authorized officer.

IN WITNESS WHEREOF, I have hereunto subscribed my name and affixed my notarial seal at Seattle, Washington, on the day and year first above written.

By: _____
KD Riley , Notary Public

This Power of Attorney is made and executed pursuant to and by authority of the following By-laws and Authorizations of American Fire and Casualty Company, The Ohio Casualty Insurance Company, Liberty Mutual Insurance Company, and West American Insurance Company which resolutions are now in full force and effect reading as follows:

ARTICLE IV – OFFICERS – Section 12. Power of Attorney. Any officer or other official of the Corporation authorized for that purpose in writing by the Chairman or the President, and subject to such limitation as the Chairman or the President may prescribe, shall appoint such attorneys-in-fact, as may be necessary to act in behalf of the Corporation to make, execute, seal, acknowledge and deliver as surety any and all undertakings, bonds, recognizances and other surety obligations. Such attorneys-in-fact, subject to the limitations set forth in their respective powers of attorney, shall have full power to bind the Corporation by their signature and execution of any such instruments and to attach thereto the seal of the Corporation. When so executed, such instruments shall be as binding as if signed by the President and attested to by the Secretary. Any power or authority granted to any representative or attorney-in-fact under the provisions of this article may be revoked at any time by the Board, the Chairman, the President or by the officer or officers granting such power or authority.

ARTICLE XIII – Execution of Contracts – SECTION 5. Surety Bonds and Undertakings. Any officer of the Company authorized for that purpose in writing by the chairman or the president, and subject to such limitations as the chairman or the president may prescribe, shall appoint such attorneys-in-fact, as may be necessary to act in behalf of the Company to make, execute, seal, acknowledge and deliver as surety any and all undertakings, bonds, recognizances and other surety obligations. Such attorneys-in-fact subject to the limitations set forth in their respective powers of attorney, shall have full power to bind the Company by their signature and execution of any such instruments and to attach thereto the seal of the Company. When so executed such instruments shall be as binding as if signed by the president and attested by the secretary.

Certificate of Designation – The President of the Company, acting pursuant to the Bylaws of the Company, authorizes Gregory W. Davenport, Assistant Secretary to appoint such attorneys-in-fact as may be necessary to act on behalf of the Company to make, execute, seal, acknowledge and deliver as surety any and all undertakings, bonds, recognizances and other surety obligations.

Authorization – By unanimous consent of the Company's Board of Directors, the Company consents that facsimile or mechanically reproduced signature of any assistant secretary of the Company, wherever appearing upon a certified copy of any power of attorney issued by the Company in connection with surety bonds, shall be valid and binding upon the Company with the same force and effect as though manually affixed.

I, David M. Carey, the undersigned, Assistant Secretary, of American Fire and Casualty Company, The Ohio Casualty Insurance Company, Liberty Mutual Insurance Company, and West American Insurance Company do hereby certify that the original power of attorney of which the foregoing is a full, true and correct copy of the Power of Attorney executed by said Companies, is in full force and effect and has not been revoked.

IN TESTIMONY WHEREOF, I have hereunto set my hand and affixed the seals of said Companies this 19th day of May, 2014

By: _____
David M. Carey, Assistant Secretary

Not valid for mortgage, note, loan, letter of credit, currency rate, interest rate or residual value guarantees.

To confirm the validity of this Power of Attorney call 1-610-832-8240 between 9:00 am and 4:30 pm EST on any business day.

CONTRACT
(SECTION 10)

This AGREEMENT made and entered into by and between the County of Cook, party of the first part and hereinafter called County, and D. Construction, Inc., party of the second part and hereinafter called Contractor.

WITNESSETH:

That for and in consideration of the payments to be made by the said County as hereinafter provided, the said Contractor hereby covenants and agrees with the said County to do all the work and furnish all the labor, materials, machinery, apparatus, implements, tools, and other things necessary for the improvement of a section of the public highway known as Cook County Contract No. **1428-13429**, **PAVEMENT RESURFACING ENHANCEMENT PROGRAM – SOUTH 2014** (Cottage Grove – Lincoln Highway to Glenwood-Lansing Road; Kedzie Avenue – 158TH Street to 155TH Street; Steger Road – Harlem Avenue to Cicero Avenue; 139TH Street – Coopers Grove Road to Harrison Avenue); known as Section **13-PREPS-01-RS**; in the **Various** townships within **Various** route (s) of County of Cook, and State of Illinois, at his own cost and expense, free from all liens, claims, and charges whatsoever, and in a good substantial, thorough and workmanlike manner, and in strict and full accordance, conformity and compliance with all the terms and conditions of this contract and the requirements under it of the Superintendent of Department of Transportation and Highways of Cook County, Illinois, and under the direction and to the satisfaction of the said Superintendent of Department of Transportation and Highways.

It is expressly understood and agreed by and between said County and said Contractor that the Bid hereto attached and Notice to Contractors, Specifications, Plans, Maps, Blue Prints, and Drawings, on file in the Office of the Superintendent of Department of Transportation and Highways of Cook County, Illinois, and in the office of the Department of Transportation, Springfield, Illinois, copies of which are hereto attached, hereby are included in and made a part of this contract.

The Contractor shall not begin construction operations until the contract has been approved by the Board of Cook County Commissioners and fully executed by the County. Subsequent to contract execution, the Contractor will be notified by a notice-to-proceed letter from the Superintendent of Cook County Department of Transportation of Highways to commence operations on a specified date. The undersigned agrees to start construction operations on the date so specified and to complete the proposed improvement in full compliance with the contract on June 25, 2014 thru June 24, 2016.

The Superintendent of Cook County Department of Transportation and Highways shall at the end of each month make an estimate in writing, such as in his opinion shall be just and fair, of the amount of materials furnished, delivered, properly set in place and incorporated into the herein described

improvement, and the amount of work properly done by said Contractor in the performance of the work hereunder and the value thereof under and according to the terms of this contract.

The first estimate shall cover the amount of work performed and the value of the materials properly set in place and incorporated into the herein described improvement since said Contractor commenced the performance of this contract, and each subsequent estimate, except the final one, shall be of the amount of work performed and the value of the materials properly set in place and incorporated into said improvement since the last preceding estimate was made.

Such estimates of amount and quality shall not be required to be made by strict measurement, but shall be sufficient if they are made approximately only, and each such estimate shall be submitted to the Board of County Commissioners of Cook County and upon approval by said Board of Commissioners said County shall pay to said Contractor ninety per cent (90%) of the amount stated in said estimates.

At least one week before each payment falls due, said Contractor shall submit to said Superintendent of Department of Transportation and Highways requisition for such payment, and, shall, if required, submit therewith an itemized statement of the quantities and cost and proportionate profit of work performed to the termination of the period to be covered by such payment, together with an affidavit setting forth that the items in said statement are true and just, that the services were rendered, that the articles or materials were furnished, that the sum claimed is due and unpaid, after allowing all just credits, that all labor, materials, apparatus, fixtures, and machinery furnished or used have been paid for, and if not, stating those not paid for, giving the amount due, to whom due, and for what due, attaching to said affidavit waivers of lien from those mentioned in said exceptions as having unpaid claims, and such affidavit shall contain such other matter as may be deemed necessary by the said Superintendent of Department of Transportation and Highways to protect said County in its payments, and any such statement shall not be binding upon said Superintendent of Department of Transportation and Highways.

There shall be deducted from the amount so determined for the first fifty (50) percent of the completed work a sum of ten (10) percent to be retained until after the completion of the entire work to the satisfaction of the County. After fifty (50) percent or more of the work is completed, the County may, at its discretion, certify the remaining partial payments without any further retention, provided that satisfactory progress is being made, and provided that the amount retained is not less than five (5) percent of the total adjusted contract price.

It is expressly agreed by the parties hereto that in the event any defects or imperfections in the materials or workmanship to be furnished by the Contractor herein appear within the period of one year from the date of completion of all the work mentioned herein and the acceptance thereof by said County, the Contractor will, upon notice from the said Superintendent of Department of Transportation and Highways, (which notice may be given by letter mailed to said Contractor to the business address of the Contractor shown in the Proposal), repair and make good at his own cost any such defects or imperfections and replace any defective or imperfect materials or workmanship with other materials or workmanship satisfactory to said Superintendent of Department of Transportation and Highways, and furnish all such

new materials and labor as may be necessary to do so; and in the event of the failure, refusal or delay of said Contractor to so make good, repair or replace said workmanship or materials, said County may do so or have same done by others, and said Contractor and the surety or sureties on his bond given for the faithful performance of this contract shall be liable to the County of Cook for all damages and expense occasioned by such failure, refusal or delay.

It is expressly and mutually covenanted and agreed that all of the Plans and Specifications hereinbefore mentioned and this Instrument together are the documents forming the contract between said County and said Contractor and are correlative, and whatever may be provided for and required by one of said documents shall be as binding as if provided for and required by two or more of them.

The Contractor expressly agrees that not less than the general prevailing rate of wages as found by The Board of County Commissioners for the County of Cook in accordance with the provisions of "An Act regulating wages of laborers, mechanics and other workmen employed under contracts for public works", Approved June 26, 1941, as amended, or such wage rates as may be determined by the court on appeal as in said Act provided, shall be paid to all laborers, workmen and mechanics performing work under this contract. The prevailing wage rates as found by the said Board of County Commissioners are on file in the office of the County Clerk for the County of Cook.

It is expressly understood and agreed that if the said Contractor shall fail, refuse or neglect to comply with said contract and Plans and Specifications or any provisions therein contained, or to proceed according to the terms of said contract and Plans and Specifications or any part thereof, in the manner and at the time as directed by the said Superintendent of Department of Transportation and Highways, then the said County shall have the right, and The Board of County Commissioners of Cook County is hereby given authority on behalf of the said County to declare this contract forfeited, and the said County may re-bid the whole or any part thereof upon such terms as it may see fit without prejudice to any of its rights herein.

It is expressly understood and agreed by the parties hereto that the Superintendent of Department of Transportation and Highways shall fix and determine the amount of damages to be paid to said County by the said Contractor by reason of the failure or refusal to perform this contract or comply with the provisions thereof as aforesaid, and the said Contractor hereby agrees to be held liable for the amount so fixed and determined and agrees to pay such amount; and the said County shall apply in payment of any such amount so fixed and determined any and all sums on hand or due and owing to said Contractor, and if there be not sufficient money on hand or due and owing to said Contractor to balance and pay said amount so fixed and determined, then, in such case, any amount remaining unpaid shall be a valid and subsisting claim against the said Contractor and the surety or sureties on his bond given for the faithful performance of this agreement.

PAVEMENT RESURFACING ENHANCEMENT PROGRAM - SOUTH 2014
VARIOUS LOCATIONS

SCHEDULE OF PRICES

Section No.: 13-PREPS-01-RS

ITEM NO.	QUAN-TITIES	UNIT	PAY ITEM	UNIT COST	TOTAL COST
1	13,750	SQ.YD.	HOT-MIX ASPHALT SURFACE REMOVAL, 2 1/2 IN	$ 2.00	$ 27,500.00
2	73,705	SQ.YD.	HOT-MIX ASPHALT SURFACE REMOVAL, 4 IN	$ 2.60	$ 191,633.00
3	17,491	GAL.	BITUMINOUS MATERIALS (PRIME COAT)	$ .01	$ 174.91
4	175	TON	AGGREGATE (PRIME COAT)	$ .01	$ 1.75
5	578	TON	POLYMERIZED LEVELING BINDER (MACHINE METHOD) IL-4.75, N70	$ 82.00	$ 47,396.00
6	9,287	TON	HOT-MIX ASPHALT BINDER COURSE, IL-19.0, N70	$ 59.00	$ 547,933.00
7	8,573	TON	HOT-MIX ASPHALT SURFACE COURSE, MIX "D", IL-9.5, N70	$ 66.00	$ 565,818.00
8	4	EACH	CONSTRUCTING TEST STRIP	$ 3,000.00	$ 12,000.00
9	857	FOOT	CUTTING HOT-MIX ASPHALT SURFACE	$ 3.00	$ 2,571.00
10	863	FOOT	TEMPORARY BUTT JOINTS	$ 8.00	$ 6,904.00
11	200	FOOT	COMBINATION CURB AND GUTTER REMOVAL	$ 6.30	$ 1,260.00
12	75	FOOT	COMBINATION CONCRETE CURB AND GUTTER, TYPE B-6.12	$ 28.00	$ 2,100.00
13	125	FOOT	COMBINATION CONCRETE CURB AND GUTTER, TYPE B-6.24	$ 30.80	$ 3,850.00
14	775	SQ.FT.	SIDEWALK REMOVAL	$ 5.40	$ 4,185.00
15	9	SQ.YD.	AGGREGATE BASE COURSE, TYPE B, 4 IN	$ 11.00	$ 99.00
16	300	SQ.FT.	PORTLAND CEMENT CONCRETE SIDEWALK, 5 IN	$ 9.10	$ 2730.00
17	475	SQ.FT.	PORTLAND CEMENT CONCRETE SIDEWALK, 8 IN	$ 10.10	$ 4797.50
18	200	SQ.FT.	DETECTABLE WARNINGS	$ 25.30	$ 5,060.00
19	475	FOOT	GUARDRAIL REMOVAL	$ 4.25	$ 2,018.75
20	75	FOOT	STEEL PLATE BEAM GUARDRAIL, TYPE A	$ 32.00	$ 2,400.00
21	8	EACH	TRAFFIC BARRIER TERMINAL, TYPE 1, SPECIAL	$ 2,656.00	$ 21,248.00
22	45	EACH	FRAMES AND LIDS TO BE ADJUSTED, SPECIAL	$ 750.00	$ 33,750.00
23	45	EACH	INLET FILTERS	$ 250.00	$ 11,250.00
24	5	EACH	FRAMES AND GRATES, TYPE 23V	$ 550.00	$ 2,750.00
25	5	EACH	FRAMES AND GRATES, TYPE 24V	$ 550.00	$ 2,750.00
26	5	EACH	FRAMES AND LIDS, TYPE 1 (CLOSED)	$ 400.00	$ 2,000.00
27	2	EACH	WATERPROOFING SANITARY FRAMES AND LIDS TO BE ADJUSTED, SPECIAL	$ 850.00	$ 1,700.00
28	2	EACH	WATERPROOFING SANITARY MANHOLES TO BE RECONSTRUCTED, SPECIAL	$ 850.00	$ 1,700.00
29	2	EACH	INLETS TO BE RECONSTRUCTED, SPECIAL	$ 700.00	$ 1,400.00
30	2	EACH	CATCH BASINS TO BE RECONSTRUCTED, SPECIAL	$ 850.00	$ 1,700.00

PAVEMENT RESURFACING ENHANCEMENT PROGRAM - SOUTH 2014
VARIOUS LOCATIONS

SCHEDULE OF PRICES

Section No.: 13-PREPS-01-RS

ITEM NO.	QUAN-TITIES	UNIT	PAY ITEM	UNIT COST	TOTAL COST
31	2	EACH	MANHOLES TO BE RECONSTRUCTED, SPECIAL	$ 850.00	$ 1,700.00
32	2	EACH	VALVE VAULTS TO BE RECONSTRUCTED, SPECIAL	$ 1,200.00	$ 2,400.00
33	100	TON	AGGREGATE SHOULDERS, TYPE A	$ 40.00	$ 4,000.00
34	177	SQ.YD.	TOPSOIL FURNISH AND PLACE, 4 IN	$ 10.00	$ 1,770.00
35	0.32	ACRE	SEEDING, CLASS 1A	$ 10,000.00	$ 3,200.00
36	177	SQ.YD.	EROSION CONTROL BLANKET	$ 5.00	$ 885.00
37	31	POUND	PHOSPHORUS FERTILIZER NUTRIENT	$ 5.00	$ 155.00
38	31	POUND	POTASSIUM FERTILIZER NUTRIENT	$ 5.00	$ 155.00
39	31	POUND	NITROGEN FERTILIZER NUTRIENT	$ 5.00	$ 155.00
40	78,818	FOOT	THERMOPLASTIC PAVEMENT MARKING - LINE 4 IN	$ .72	$ 56,748.96
41	1,822	FOOT	THERMOPLASTIC PAVEMENT MARKING - LINE 6 IN	$ 1.10	$ 2,004.20
42	2,232	FOOT	THERMOPLASTIC PAVEMENT MARKING - LINE 8 IN	$ 1.50	$ 3,348.00
43	1,654	FOOT	THERMOPLASTIC PAVEMENT MARKING - LINE 12 IN	$ 2.20	$ 3,638.80
44	528	FOOT	THERMOPLASTIC PAVEMENT MARKING - LINE 24 IN	$ 4.40	$ 2,323.20
45	310	SQ.FT.	THERMOPLASTIC PAVEMENT MARKING - LETTERS AND SYMBOLS	$ 3.85	$ 1,193.50
46	250	EACH	RAISED REFLECTIVE PAVEMENT MARKER REMOVAL	$ 8.00	$ 2,000.00
47	678	EACH	RAISED REFLECTIVE PAVEMENT MARKER	$ 32.50	$ 22,035.00
48	2	L.SUM	RAILROAD PROTECTIVE LIABILITY INSURANCE	$ 5,500.00	$ 11,000.00
49	5	EACH	SURVEY MONUMENTS	$ 1,500.00	$ 7,500.00
50	9	CAL.MO.	ENGINEERS FIELD OFFICE, TYPE A	$ 3,500.00	$ 31,500.00
51	1	L.SUM	TRAFFIC PROTECTION	$ 20,000.00	$ 20,000.00
52	45,000	UNIT	CONTRACT EXTRA WORK	$ 1.00	$ 45,000.00
53	325	SQ.YD.	CLASS C PATCHES, TYPE II, 10 IN	$ 60.00	$ 19,500.00
54	250	SQ.YD.	CLASS C PATCHES, TYPE III, 10 IN	$ 60.00	$ 15,000.00
55	200	SQ.YD.	CLASS D PATCHES, TYPE II, 8 IN	$ 50.00	$ 10,000.00
56	150	SQ.YD.	CLASS D PATCHES, TYPE III, 8 IN	$ 50.00	$ 7,500.00
				TOTAL	$ 1,785,391.57

County of Cook
Department of Transportation and Highways
Cook County Purchasing
Contract No.: 1428-13429

Proposal Bid Bond

Project: Pavement Resurfacing Enhancement Program - South 2014
Section 13-PREPS-01-RS
Date April 23, 2014
Letting April 23, 2014

We D. Construction, Inc. as Principal, and Liberty Mutual Insurance Company as Surety, are held and firmly bound unto the County of Cook a body politic and corporate of the state of Illinois herein after called the County in the penal sum of 5% of the total bid price, or for the amount specified in Article 102.09 of the "Standard Specifications for Road and Bridge Construction" in effect on the date of invitation for bids. We bind ourselves, our heirs, executors, administrators, successors, and assigns, jointly to pay to the County this sum under the conditions of this instrument.

WHEREAS THE CONDITION OF THE FOREGOING OBLIGATION IS SUCH that, the said PRINCIPAL is submitting a written proposal to the County acting through its awarding agency for the construction of the work designated as the above section.

THEREFORE, if the proposal is accepted and a contract awarded to the PRINCIPAL by the County for the above-designated section, and the PRINCIPAL shall within fifteen (15) days after award enter into a formal contract, furnish surety guaranteeing the faithful performance of the work, and furnish the required insurance coverage, all as provided in the Standard Specifications for Road and Bridge Construction" and applicable Supplemental Specifications, then this obligation shall become void; otherwise it shall remain in full force and effect.

IN THE EVENT the County determines the PRINCIPAL has failed to enter into a formal contract in compliance with any requirements set forth in the preceding paragraph, then the County acting through its awarding agency shall immediately be entitled to recover the full penal sum set out above, together with all court costs, all attorney fees, and any other expense of recovery.

IN TESTIMONY WHEREOF, the said PRINCIPAL and said SURETY have caused this instrument to be signed by their respective officers and their corporate seals to be hereunto affixed this 23rd day of April A.D. 20 14.

PRINCIPAL

D. Construction, Inc.
(Company Name) (Seal)

BY: _____
(Signature & Title) President
Kenneth Sandeno

(Company Name) (Seal)

BY: _____
(Signature & Title)

(If PRINCIPAL is a joint venture of two or more contractors, the company names, seals and authorized signatures of each contractor must be affixed.)

SURETY

Liberty Mutual Insurance Company
(Name of Surety) (Seal)

BY: _____
(Signature of Attorney-in-fact) R.L. McWethy

STATE OF ILLINOIS
COUNTY OF ~~COOK~~ WILL Will XX

I, Sue Bottomley, a Notary Public in and for Cook County, do hereby certify that Kenneth Sandeno and R.L. McWethy
(Insert names of individuals signing on behalf of PRINCIPAL & SURETY)

Who are each personally known to me to be the same persons whose names are subscribed to the foregoing instrument on behalf of PRINCIPAL and SURETY, appeared before me this day in person and acknowledged respectively, that they signed, sealed, and delivered said instrument as their free and voluntary act for the uses and purposes therein set forth.

Given under my hand and notarial seal this 23rd day of April A.D., 2014. My commission expires 06/30/2014

Sue Bottomley
Notary Public

"OFFICIAL SEAL"
SUE BOTTOMLEY
Notary Public, State of Illinois
My Commission Expires 06/30/2014

*Improper execution of this form (i.e. Missing Signatures or Seals or incomplete certification) will result in bid being declared irregular.
** If Bid Bond is used in lieu of proposal guaranty check, it must be on this form and must be submitted with Bid.

THIS POWER OF ATTORNEY IS NOT VALID UNLESS IT IS PRINTED ON RED BACKGROUND.
This Power of Attorney limits the acts of those named herein, and they have no authority to bind the Company except in the manner and to the extent herein stated.

Certificate No. 6258890

American Fire and Casualty Company
The Ohio Casualty Insurance Company
Liberty Mutual Insurance Company
West American Insurance Company

POWER OF ATTORNEY

KNOWN ALL PERSONS BY THESE PRESENTS: That American Fire & Casualty Company and The Ohio Casualty Insurance Company are corporations duly organized under the laws of the State of New Hampshire, that Liberty Mutual Insurance Company is a corporation duly organized under the laws of the State of Massachusetts, and West American Insurance Company is a corporation duly organized under the laws of the State of Indiana (herein collectively called the "Companies"), pursuant to and by authority herein set forth, does hereby name, constitute and appoint, Gary A. Eaton; Kevin J. Scanlon; R. L. McWethy; Rob W. Kegley Jr; Robert H. Walker

all of the city of New Lenox, state of IL each individually if there be more than one named, its true and lawful attorney-in-fact to make, execute, seal, acknowledge and deliver, for and on its behalf as surety and as its act and deed, any and all undertakings, bonds, recognizances and other surety obligations, in pursuance of these presents and shall be as binding upon the Companies as if they have been duly signed by the president and attested by the secretary of the Companies in their own proper persons.

IN WITNESS WHEREOF, this Power of Attorney has been subscribed by an authorized officer or official of the Companies and the corporate seals of the Companies have been affixed thereto this 22nd day of August, 2013.

American Fire and Casualty Company
The Ohio Casualty Insurance Company
Liberty Mutual Insurance Company
West American Insurance Company

By: _____
Gregory W. Davenport, Assistant Secretary

STATE OF WASHINGTON ss
COUNTY OF KING

On this 22nd day of August, 2013, before me personally appeared Gregory W. Davenport, who acknowledged himself to be the Assistant Secretary of American Fire and Casualty Company, Liberty Mutual Insurance Company, The Ohio Casualty Company, and West American Insurance Company, and that he, as such, being authorized so to do, execute the foregoing instrument for the purposes therein contained by signing on behalf of the corporations by himself as a duly authorized officer.

IN WITNESS WHEREOF, I have hereunto subscribed my name and affixed my notarial seal at Seattle, Washington, on the day and year first above written.

By: _____
KD Riley , Notary Public

This Power of Attorney is made and executed pursuant to and by authority of the following By-laws and Authorizations of American Fire and Casualty Company, The Ohio Casualty Insurance Company, Liberty Mutual Insurance Company, and West American Insurance Company which resolutions are now in full force and effect reading as follows:

ARTICLE IV – OFFICERS – Section 12. Power of Attorney. Any officer or other official of the Corporation authorized for that purpose in writing by the Chairman or the President, and subject to such limitation as the Chairman or the President may prescribe, shall appoint such attorneys-in-fact, as may be necessary to act in behalf of the Corporation to make, execute, seal, acknowledge and deliver as surety any and all undertakings, bonds, recognizances and other surety obligations. Such attorneys-in-fact, subject to the limitations set forth in their respective powers of attorney, shall have full power to bind the Corporation by their signature and execution of any such instruments and to attach thereto the seal of the Corporation. When so executed, such instruments shall be as binding as if signed by the President and attested to by the Secretary. Any power or authority granted to any representative or attorney-in-fact under the provisions of this article may be revoked at any time by the Board, the Chairman, the President or by the officer or officers granting such power or authority.

ARTICLE XIII – Execution of Contracts – SECTION 5. Surety Bonds and Undertakings. Any officer of the Company authorized for that purpose in writing by the chairman or the president, and subject to such limitations as the chairman or the president may prescribe, shall appoint such attorneys-in-fact, as may be necessary to act in behalf of the Company to make, execute, seal, acknowledge and deliver as surety any and all undertakings, bonds, recognizances and other surety obligations. Such attorneys-in-fact subject to the limitations set forth in their respective powers of attorney, shall have full power to bind the Company by their signature and execution of any such instruments and to attach thereto the seal of the Company. When so executed such instruments shall be as binding as if signed by the president and attested by the secretary.

Certificate of Designation – The President of the Company, acting pursuant to the Bylaws of the Company, authorizes Gregory W. Davenport, Assistant Secretary to appoint such attorneys-in-fact as may be necessary to act on behalf of the Company to make, execute, seal, acknowledge and deliver as surety any and all undertakings, bonds, recognizances and other surety obligations.

Authorization – By unanimous consent of the Company's Board of Directors, the Company consents that facsimile or mechanically reproduced signature of any assistant secretary of the Company, wherever appearing upon a certified copy of any power of attorney issued by the Company in connection with surety bonds, shall be valid and binding upon the Company with the same force and effect as though manually affixed.

I, David M. Carey, the undersigned, Assistant Secretary, of American Fire and Casualty Company, The Ohio Casualty Insurance Company, Liberty Mutual Insurance Company, and West American Insurance Company do hereby certify that the original power of attorney of which the foregoing is a full, true and correct copy of the Power of Attorney executed by said Companies, is in full force and effect and has not been revoked.

IN TESTIMONY WHEREOF, I have hereunto set my hand and affixed the seals of said Companies this 23rd day of April, 2014.

By: _____
David M. Carey, Assistant Secretary

Not valid for mortgage, note, loan, letter of credit, currency rate, interest rate or residual value guarantees.

To confirm the validity of this Power of Attorney call 1-610-832-8240 between 9:00 am and 4:30 pm EST on any business day.

BID DEPOSIT FORM

AS REQUIRED BY INSTRUCTION TO BIDDER OF/AND INCONJUNCTION WITH THE BID HEREWITH SUBMITTED

(THIS FORM MUST BE SUBMITTED WITH THE BID)

TO: COOK COUNTY DEPARTMENT OF TRANSPORTATION AND HIGHWAYS

BID FOR: Pavement Resurfacing Enhancement Program- South 2014
Contract 1428-13429

BID OPENING DATE: 4-23-2014

We deposit (subject to all condition of said proposal) the following described deposit check:

( ) Cashier's Check ( ) Bank Draft (✓) Bid Bond ( ) Other

Drawn on: _____ **of** _____
Bank **City** **State**

Draft or Check Number: _____ **Date:** _____

Amount: $ Five Percent Bid Bond

Submitted by: D. Construction, Inc.
Bidder
1488 S. Broadway
Street Address
Coal City, IL 60416
City **State** **Zip Code**

DO NOT WRITE IN THE SPACES BELOW
The above described Deposit Check is:

( ) Held _____ **Date** _____
( ) Mailed _____ **Date** _____
( ) Delivered To _____ **Date** _____
( ) Bond Substituted _____ **Date** _____
( ) Bond Mailed To _____ **Date** _____

CERTIFICATE OF LIABILITY INSURANCE

DATE (MM/DD/YYYY): 5/28/2014

THIS CERTIFICATE IS ISSUED AS A MATTER OF INFORMATION ONLY AND CONFERS NO RIGHTS UPON THE CERTIFICATE HOLDER. THIS CERTIFICATE DOES NOT AFFIRMATIVELY OR NEGATIVELY AMEND, EXTEND OR ALTER THE COVERAGE AFFORDED BY THE POLICIES BELOW. THIS CERTIFICATE OF INSURANCE DOES NOT CONSTITUTE A CONTRACT BETWEEN THE ISSUING INSURER(S), AUTHORIZED REPRESENTATIVE OR PRODUCER, AND THE CERTIFICATE HOLDER.

IMPORTANT: If the certificate holder is an ADDITIONAL INSURED, the policy(ies) must be endorsed. If SUBROGATION IS WAIVED, subject to the terms and conditions of the policy, certain policies may require an endorsement. A statement on this certificate does not confer rights to the certificate holder in lieu of such endorsement(s).

PRODUCER	CONTACT NAME: Jo-Ann E. Billo, CRIS
Columbian Agency 1005 Laraway Road New Lenox IL 60451	PHONE (A/C, No, Ext): 815-215-4712 FAX (A/C, No): 815-215-4752 E-MAIL ADDRESS: jbillo@columbianagency.com

INSURED	INSURER(S) AFFORDING COVERAGE	NAIC #
D Construction, Inc. 1488 S. Broadway Coal City IL 60416 DCONS-1	INSURER A : Liberty Mutual	23035
	INSURER B : Starr Indemnity & Liability Co	38318
	INSURER C : Navigators Insurance Company	
	INSURER D : Travelers Property Casualty	25674
	INSURER E :	
	INSURER F :	

COVERAGES **CERTIFICATE NUMBER:** 814187264 **REVISION NUMBER:**

THIS IS TO CERTIFY THAT THE POLICIES OF INSURANCE LISTED BELOW HAVE BEEN ISSUED TO THE INSURED NAMED ABOVE FOR THE POLICY PERIOD INDICATED. NOTWITHSTANDING ANY REQUIREMENT, TERM OR CONDITION OF ANY CONTRACT OR OTHER DOCUMENT WITH RESPECT TO WHICH THIS CERTIFICATE MAY BE ISSUED OR MAY PERTAIN, THE INSURANCE AFFORDED BY THE POLICIES DESCRIBED HEREIN IS SUBJECT TO ALL THE TERMS, EXCLUSIONS AND CONDITIONS OF SUCH POLICIES. LIMITS SHOWN MAY HAVE BEEN REDUCED BY PAID CLAIMS.

INSR LTR	TYPE OF INSURANCE	ADDL INSR	SUBR WVD	POLICY NUMBER	POLICY EFF (MM/DD/YYYY)	POLICY EXP (MM/DD/YYYY)	LIMITS	
A	GENERAL LIABILITY	Y	Y	TB2641440232	4/5/2014	4/6/2015	EACH OCCURRENCE	$1,000,000
	X COMMERCIAL GENERAL LIABILITY						DAMAGE TO RENTED PREMISES (Ea occurrence)	$100,000
	CLAIMS-MADE X OCCUR						MED EXP (Any one person)	$5,000
							PERSONAL & ADV INJURY	$1,000,000
							GENERAL AGGREGATE	$2,000,000
	GEN'L AGGREGATE LIMIT APPLIES PER:						PRODUCTS - COMP/OP AGG	$2,000,000
	POLICY X PRO-JECT LOC							$
A	AUTOMOBILE LIABILITY	Y	Y	AS2641440232	4/5/2014	4/5/2015	COMBINED SINGLE LIMIT (Ea accident)	$1,000,000
	X ANY AUTO						BODILY INJURY (Per person)	$
	ALL OWNED AUTOS / SCHEDULED AUTOS						BODILY INJURY (Per accident)	$
	HIRED AUTOS / NON-OWNED AUTOS						PROPERTY DAMAGE (Per accident)	$
								$
B	X UMBRELLA LIAB X OCCUR	Y	Y	1000020827	4/5/2014	4/5/2015	EACH OCCURRENCE	$5,000,000
	EXCESS LIAB CLAIMS-MADE						AGGREGATE	$5,000,000
	DED RETENTION $							$
A	WORKERS COMPENSATION AND EMPLOYERS' LIABILITY Y/N		Y	WA264D440232	4/5/2014	4/5/2015	X WC STATU-TORY LIMITS OTH-ER	
	ANY PROPRIETOR/PARTNER/EXECUTIVE OFFICER/MEMBER EXCLUDED? N (Mandatory in NH)	N/A					E.L. EACH ACCIDENT	$1,000,000
	If yes, describe under DESCRIPTION OF OPERATIONS below						E.L. DISEASE - EA EMPLOYEE	$1,000,000
							E.L. DISEASE - POLICY LIMIT	$1,000,000
C	Excess Umbrella			HO14EXC7511591V	4/5/2014	4/5/2015	Limit	20,000,000
D	Leased/Rented			QT6608242B035	4/5/2014	4/5/2015	Max/Item	750,000

DESCRIPTION OF OPERATIONS / LOCATIONS / VEHICLES (Attach ACORD 101, Additional Remarks Schedule, if more space is required)

Project: Pavement Resurfacing Enhancement Program - South 2014 Contract #1428-13429; Section: 113-PREPS-01-RS
Cook County, its officials and employees are included as additional insureds on the above indicated General Liability and Auto policies on a primary/noncontributory basis if required by written contract per the attached CG2010 & CG2037. Waiver of subrogation applies as indicated above
The coverage and limits conform to the minimums required by Article 107.27 of the Standard Specifications for Road and Bridge Construction.

CERTIFICATE HOLDER

Cook County
69 W. Washington Street, Suite 2260
Chicago IL 60602

OK KW

CANCELLATION

SHOULD ANY OF THE ABOVE DESCRIBED POLICIES BE CANCELLED BEFORE THE EXPIRATION DATE THEREOF, NOTICE WILL BE DELIVERED IN ACCORDANCE WITH THE POLICY PROVISIONS.

AUTHORIZED REPRESENTATIVE
RL McCarthy

© 1988-2010 ACORD CORPORATION. All rights reserved.

CERTIFICATE OF LIABILITY INSURANCE

DATE (MM/DD/YYYY): 5/16/2014

THIS CERTIFICATE IS ISSUED AS A MATTER OF INFORMATION ONLY AND CONFERS NO RIGHTS UPON THE CERTIFICATE HOLDER. THIS CERTIFICATE DOES NOT AFFIRMATIVELY OR NEGATIVELY AMEND, EXTEND OR ALTER THE COVERAGE AFFORDED BY THE POLICIES BELOW. THIS CERTIFICATE OF INSURANCE DOES NOT CONSTITUTE A CONTRACT BETWEEN THE ISSUING INSURER(S), AUTHORIZED REPRESENTATIVE OR PRODUCER, AND THE CERTIFICATE HOLDER.

IMPORTANT: If the certificate holder is an ADDITIONAL INSURED, the policy(ies) must be endorsed. If SUBROGATION IS WAIVED, subject to the terms and conditions of the policy, certain policies may require an endorsement. A statement on this certificate does not confer rights to the certificate holder in lieu of such endorsement(s).

PRODUCER
Columbian Agency
1005 Laraway Road
New Lenox IL 60451

CONTACT NAME: Jo-Ann E. Billo, CRIS
PHONE (A/C, No, Ext): 815-215-4712 **FAX (A/C, No):** 815-215-4752
E-MAIL ADDRESS: jbillo@columbianagency.com

INSURER(S) AFFORDING COVERAGE	NAIC #
INSURER A: Liberty Mutual	23035
INSURER B: Starr Indemnity & Liability Co	38318
INSURER C: Navigators Insurance Company	
INSURER D: Travelers Property Casualty	26674
INSURER E:	
INSURER F:	

INSURED
DCONS-1
D Construction, Inc.
1488 S. Broadway
Coal City IL 60416

COVERAGES **CERTIFICATE NUMBER:** 1558608639 **REVISION NUMBER:**

THIS IS TO CERTIFY THAT THE POLICIES OF INSURANCE LISTED BELOW HAVE BEEN ISSUED TO THE INSURED NAMED ABOVE FOR THE POLICY PERIOD INDICATED. NOTWITHSTANDING ANY REQUIREMENT, TERM OR CONDITION OF ANY CONTRACT OR OTHER DOCUMENT WITH RESPECT TO WHICH THIS CERTIFICATE MAY BE ISSUED OR MAY PERTAIN, THE INSURANCE AFFORDED BY THE POLICIES DESCRIBED HEREIN IS SUBJECT TO ALL THE TERMS, EXCLUSIONS AND CONDITIONS OF SUCH POLICIES. LIMITS SHOWN MAY HAVE BEEN REDUCED BY PAID CLAIMS.

INSR LTR	TYPE OF INSURANCE	ADDL INSR	SUBR WVD	POLICY NUMBER	POLICY EFF (MM/DD/YYYY)	POLICY EXP (MM/DD/YYYY)	LIMITS	
A	GENERAL LIABILITY	Y	Y	TB2641440232	4/5/2014	4/5/2015	EACH OCCURRENCE	$1,000,000
	X COMMERCIAL GENERAL LIABILITY						DAMAGE TO RENTED PREMISES (Ea occurrence)	$100,000
	CLAIMS-MADE X OCCUR						MED EXP (Any one person)	$5,000
							PERSONAL & ADV INJURY	$1,000,000
							GENERAL AGGREGATE	$2,000,000
	GEN'L AGGREGATE LIMIT APPLIES PER:						PRODUCTS - COMP/OP AGG	$2,000,000
	POLICY X PRO-JECT LOC							$
A	AUTOMOBILE LIABILITY	Y	Y	AS2641440232	4/5/2014	4/5/2015	COMBINED SINGLE LIMIT (Ea accident)	$1,000,000
	X ANY AUTO						BODILY INJURY (Per person)	$
	ALL OWNED AUTOS / SCHEDULED AUTOS						BODILY INJURY (Per accident)	$
	HIRED AUTOS / NON-OWNED AUTOS						PROPERTY DAMAGE (Per accident)	$
								$
B	X UMBRELLA LIAB X OCCUR			1000020827	4/5/2014	4/5/2015	EACH OCCURRENCE	$5,000,000
	EXCESS LIAB CLAIMS-MADE						AGGREGATE	$5,000,000
	DED RETENTION $							$
A	WORKERS COMPENSATION AND EMPLOYERS' LIABILITY Y/N	N/A	Y	WA264D440232	4/5/2014	4/5/2015	X WC STATU-TORY LIMITS OTH-ER	
	ANY PROPRIETOR/PARTNER/EXECUTIVE OFFICER/MEMBER EXCLUDED? N						E.L. EACH ACCIDENT	$1,000,000
	(Mandatory in NH) If yes, describe under DESCRIPTION OF OPERATIONS below						E.L. DISEASE - EA EMPLOYEE	$1,000,000
							E.L. DISEASE - POLICY LIMIT	$1,000,000
C	Excess Umbrella			HO14EXC751159IV	4/5/2014	4/5/2015	Limit	20,000,000
D	Leased/Rented			QT6606242B035	4/5/2014	4/5/2015	Max/Item	750,000

DESCRIPTION OF OPERATIONS / LOCATIONS / VEHICLES (Attach ACORD 101, Additional Remarks Schedule, if more space is required)

Project: Pavement Resurfacing Enhancement Program - South 2014 Contract #1428-13429; Section: 113-PREPS-01-RS

Those listed on the attached are included as additional Insureds on the General Liability,Auto & Umbrella policies on a primary/noncontributory basis for on-going & products/completed operations if required by written contract. Waiver of subrogation applies on the GL, Auto and Work Comp if required by written contract. Umbrella Follows Form.
See Attached...

CERTIFICATE HOLDER

NORTHEAST ILLINOIS REGIONAL
TRANSPORTATION AUTHORITY
547 W JACKSON BLVD
D/B/A METRA
CHICAGO IL 60661

CANCELLATION

SHOULD ANY OF THE ABOVE DESCRIBED POLICIES BE CANCELLED BEFORE THE EXPIRATION DATE THEREOF, NOTICE WILL BE DELIVERED IN ACCORDANCE WITH THE POLICY PROVISIONS.

AUTHORIZED REPRESENTATIVE
R.C. McCarthy

© 1988-2010 ACORD CORPORATION. All rights reserved.

AGENCY CUSTOMER ID: DCONS-1

LOC #:

ACORD

ADDITIONAL REMARKS SCHEDULE

AGENCY		NAMED INSURED
Columbian Agency		D Construction, Inc. 1488 S. Broadway Coal City IL 60416
POLICY NUMBER		
CARRIER	NAIC CODE	EFFECTIVE DATE:

ADDITIONAL REMARKS

THIS ADDITIONAL REMARKS FORM IS A SCHEDULE TO ACORD FORM,

FORM NUMBER: 25 FORM TITLE: CERTIFICATE OF LIABILITY INSURANCE

Additional Insured:

The Commuter Rail Division of the Regional Transportation Authority, a division of an Illinois municipal corporation, and its affiliated separate public corporation known as the Northeast Illinois Regional Commuter Railroad Corporation, both operating under the service mark Metra as now exists or may hereafter be constituted or acquired, and the Regional Transportation Authority, an Illinois municipal corporation and any other railroads operating on Metra Property

Per form CG2417 and CA2070 exclusion for work within 50 feet of railroad has been removed.

X, C, U included

© 2008 ACORD CORPORATION. All rights reserved.

The ACORD name and logo are registered marks of ACORD

POLICY NUMBER: TB2-641-440232

COMMERCIAL GENERAL LIABILITY
CG 20 10 07 04

THIS ENDORSEMENT CHANGES THE POLICY. PLEASE READ IT CAREFULLY.

ADDITIONAL INSURED – OWNERS, LESSEES OR CONTRACTORS – SCHEDULED PERSON OR ORGANIZATION

This endorsement modifies insurance provided under the following:

COMMERCIAL GENERAL LIABILITY COVERAGE PART

A. Section II – Who Is An Insured is amended to include as an additional insured the person(s) or organization(s) shown in the Schedule, but only with respect to liability for "bodily injury", "property damage" or "personal and advertising injury" caused, in whole or in part, by:
   1. Your acts or omissions; or
   2. The acts or omissions of those acting on your behalf;

   in the performance of your ongoing operations for the additional insured(s) at the location(s) designated below.

B. With respect to the insurance afforded to these additional insureds, the following additional exclusions apply:
   This insurance does not apply to "bodily injury" or "property damage" occurring after:
   1. All work, including materials, parts or equipment furnished in connection with such work, on the project (other than service, maintenance or repairs) to be performed by or on behalf of the additional insured(s) at the location of the covered operations has been completed; or
   2. That portion of "your work" out of which the injury or damage arises has been put to its intended use by any person or organization other than another contractor or subcontractor engaged in performing operations for a principal as a part of the same project.

SCHEDULE

Name Of Additional Insured Person(s) Or Organization(s):	Location(s) Of Covered Operations
Per master schedule kept on record at broker: Columbian Agency, 1005 Laraway Road, New Lenox, IL 60451-4102	Per master schedule kept on record at broker: Columbian Agency, 1005 Laraway Road, New Lenox, IL 60451-4102

Information required to complete this Schedule, if not shown above, will be shown in the Declarations.

© ISO Properties, Inc., 2004

POLICY NUMBER: TB2-641-440232

COMMERCIAL GENERAL LIABILITY
CG 20 37 07 04

THIS ENDORSEMENT CHANGES THE POLICY. PLEASE READ IT CAREFULLY.

ADDITIONAL INSURED – OWNERS, LESSEES OR CONTRACTORS – COMPLETED OPERATIONS

This endorsement modifies insurance provided under the following:

COMMERCIAL GENERAL LIABILITY COVERAGE PART

Section II – Who Is An Insured is amended to include as an additional insured the person(s) or organization(s) shown in the Schedule, but only with respect to liability for "bodily injury" or "property damage" caused, in whole or in part, by "your work" at the location designated and described in the schedule of this endorsement performed for that additional insured and included in the "products-completed operations hazard".

SCHEDULE

Name Of Additional Insured Person(s) Or Organization(s):	Location And Description Of Completed Operations
Per master schedule kept on record at broker: Columbian Agency, 1005 Laraway Road, . New Lenox, IL 60451-4102	Per master schedule kept on record at broker: Columbian Agency, 1005 Laraway Road , New Lenox, IL 60451-4102

Information required to complete this Schedule, if not shown above, will be shown in the Declarations.

© ISO Properties, Inc., 2004

HUDSON INSURANCE GROUP®

HUDSON RAILROAD PROTECTIVE LIABILITY GROUP

A voluntary membership organization whose principal office is:
4323 Warren Street, NW, Washington, D.C. 20016-2437

POLICY CERTIFICATE

THIS POLICY CERTIFICATE IS ISSUED UNDER MASTER POLICY NUMBER 201401
ISSUED TO HUDSON RAILROAD PROTECTIVE LIABILITY GROUP

Policy Number: RRP3619201261

Named Insured: Northeast Illinois Regional Commuter Corporation Railroad Affiliates including Designated Employees and:

1) Any subsidiary company of such organization, including any subsidiary company thereof:
   a. Existing at the effective date of this policy, or
   b. Acquired during the "Policy Period"

2) Any other company controlled and actively managed by such organization or other subsidiary thereof;
   a. At the effective date of this policy, or
   b. Upon the acquisition of the control, and active management thereof if acquired during the "Policy Period."

Named Insured Mailing Address: 547 West Jackson Boulevard Chicago, IL 60661-0671
Contractor Name: D. Construction, Inc.
Contractor Address: 1488 S. Broadway Coal City, IL 60416
Project Work: Consists of furnishing all labor, materials & equipment required for Pavement Resurfacing Enhancement Program-South 2014.Includes but is not limited to hot-mix asphalt surface removal, hot-mix asphalt resurfacing,frame & lid adjustments,guardrail upgrades & maintenance,sidewalk removal & ADA Compliant ramp replacement, traffice control & protection, pavement markings,restoration, & all appurtenenant work required on a work order basis in Cook County, IL
Location of Work: SEE COMMENTS FOR DETAIL: Cottage Grove;Kedzie Avenue;Sieger Road;139th Street / SECTION NO: 13-PREPS-01-RS
Contract Cost within 50 ft: $ 2,000 **Contract # or Name:** 1428-13429
Work Performed For: -- Cook County Department of Transportation & Highways (69 W. Washington Street, Suite 2260 Chicago, IL 60602)

Policy Period: EFFECTIVE DATE: 6/1/2014 12:01 AM to EXPIRATION DATE: 6/1/2015 12:01 AM

Limits of Liability: $ 5,000,000 per occurrence; $ 10,000,000 policy certificate aggregate
Limits apply separately to each policy certificate issued under the Master Policy.

Territory: United States of America

Premium: $ 3,000.00

Notice: Notices required to be given by the Named Insured under this policy shall be sent to:
Attn: Claims Department, Hudson Insurance Company
100 William Street, 5th Floor; New York, N.Y. 10038
You may also call: 1-866-546-3981 or email: HudsonClaims300@HudsonInsGroup.com
to discuss your policy coverage or to report or discuss a claim.

Wording: As per the Railroad Protective Form CG00351207; CG21700108; IL00210908; HASB0010111; HTER0010111 and all required state amendatory endorsements.

Terms: All other terms and conditions as per the referenced Policy Form above and applicable Endorsements.

Agent Name: COLUMBIAN INSURANCE AGENCY
Agent Address: P. O. BOX 39 NEW LENOX, IL 60451

Authorized Representative

OK Rec'd

DATE: 5/16/2014

RAILROAD PROTECTIVE LIABILITY COVERAGE FORM

Various provisions in this policy restrict coverage. Read the entire policy carefully to determine rights, duties and what is and is not covered.

Throughout this policy, the words "you" and "your" refer to the Named Insured shown in the Declarations. The words "we", "us" and "our" refer to the Company providing this insurance.

The word "insured" means any person or organization qualifying as such under Section II – Who Is An Insured.

Other words and phrases that appear in quotation marks have special meaning. Refer to Section V – Definitions.

SECTION I – COVERAGES

COVERAGE A – BODILY INJURY AND PROPERTY DAMAGE LIABILITY

1. Insuring Agreement

a. We will pay those sums that the insured becomes legally obligated to pay as damages because of "bodily injury" or "property damage" to which this insurance applies. We will have the right and duty to defend the insured against any "suit" seeking those damages. However, we will have no duty to defend the insured against any "suit" seeking damages for "bodily injury" or "property damage" to which this insurance does not apply. We may, at our discretion, investigate any "occurrence" and settle any claim or "suit" that may result. But:

(1) The amount we will pay for damages is limited as described in Section III – Limits Of Insurance; and

(2) Our right and duty to defend ends when we have used up the applicable limit of insurance in the payment of judgments or settlements.

No other obligation or liability to pay sums or perform acts or services is covered unless explicitly provided for under Supplementary Payments – Coverage A.

b. This insurance applies to "bodily injury" and "property damage" only if:

(1) The "bodily injury" or "property damage" occurs during the policy period; and

(2) The "bodily injury" or "property damage" arises out of acts or omissions at the "job location" which are related to or are in connection with the "work" described in the Declarations.

c. Damages because of "bodily injury" include damages claimed by any person or organization for care, loss of services or death resulting at any time from the "bodily injury".

2. Exclusions

This insurance does not apply to:

a. Expected Or Intended Injury

"Bodily injury" or "property damage" expected or intended from the standpoint of the insured. This exclusion does not apply to "bodily injury" resulting from the use of reasonable force to protect persons or property.

b. Contractual Liability

"Bodily injury" or "property damage" for which the insured is obligated to pay damages by reason of the assumption of liability in a contract or agreement. This exclusion does not apply to liability for damages assumed in a contract or agreement that is a "covered contract".

c. Completed Work

"Bodily injury" or "property damage" occurring after the "work" is completed. The "work" will be deemed completed at the earliest of the following times:

(1) When all the "work" called for in the "contractor's" contract has been completed.

(2) When all the "work" to be done at the "job location" has been completed.

(3) When that part of the "work" done at the "job location" has been put to its intended use by you, the governmental authority or other contracting party.

This exclusion does not apply to "bodily injury" or "property damage" resulting from the existence of or removal of tools, uninstalled equipment or abandoned or unused materials.

© ISO Properties, Inc., 2006

d. Acts Or Omissions Of Insured

"Bodily injury" or "property damage", the sole proximate cause of which is an act or omission of any insured other than acts or omissions of any of "your designated employees". This exclusion does not apply to injury or damage sustained at the "job location" by any of "your designated employees" or employee of the "contractor", or by any employee of the governmental authority or any other contracting party (other than you) specified in the Declarations.

e. Workers' Compensation And Similar Laws

Any obligation of the insured under a workers' compensation, disability benefits or unemployment compensation law or any similar law. This exclusion does not apply to any obligation of the insured under the Federal Employers Liability Act, as amended.

f. Pollution

"Bodily injury" or "property damage" arising out of the actual, alleged or threatened discharge, dispersal, seepage, migration, release or escape of "pollutants" at or from the "job location":

(1) Due to the past or present use of the "job location" by you or for you or others for the handling, storage, disposal, processing or treatment of waste; or

(2) Due to the dumping or disposal of waste on the "job location" by the "contractor" with the knowledge of you or any of "your designated employees"; or

(3) On which you or "contractors" working directly or indirectly on any insured's behalf are performing operations if the "pollutants" are brought on or to the "job location" in connection with such operations by you, the "contractor" or "your designated employee". However, this subparagraph does not apply to:

(a) "Bodily injury" or "property damage" arising out of the escape of fuels or lubricants from equipment used at the "job location".

(b) "Bodily injury" or "property damage" arising out of heat, smoke or fumes from a "hostile fire".

(4) On which you or "contractors" working directly or indirectly on any insured's behalf are performing operations if the operations are to test for, monitor, clean up, remove, contain, treat, detoxify or neutralize, or in any way respond to, or assess the effects of, "pollutants".

g. Damage To Owned, Leased Or Entrusted Property

"Property damage" to property owned by you or leased or entrusted to you under a lease or trust agreement.

h. War

"Bodily injury" or "property damage", however caused, arising, directly or indirectly, out of:

(1) War, including undeclared or civil war;

(2) Warlike action by a military force, including action in hindering or defending against an actual or expected attack, by any government, sovereign or other authority using military personnel or other agents; or

(3) Insurrection, rebellion, revolution, usurped power, or action taken by governmental authority in hindering or defending against any of these.

COVERAGE B – PHYSICAL DAMAGE TO PROPERTY

1. Insuring Agreement

We will pay for "physical damage to property" to which this insurance applies. The "physical damage to property" must occur during the policy period. The "physical damage to property" must arise out of acts or omissions at the "job location" which are related to or in connection with the "work" described in the Declarations. The property must be owned by or leased or entrusted to you under a lease or trust agreement.

2. Exclusions

This insurance does not apply to "physical damage to property":

a. Completed Work

Occurring after the "work" is completed. The "work" will be deemed completed at the earliest of the following times:

(1) When all the "work" called for in the "contractor's" contract has been completed.

(2) When all the "work" to be done at the "job location" has been completed.

(3) When that part of the "work" done at the "job location" has been put to its intended use by you, the governmental authority or other contracting party.

This exclusion does not apply to "physical damage to property" resulting from the existence of tools, uninstalled equipment or abandoned or unused materials.

© ISO Properties, Inc., 2006

b. Acts Or Omissions Of Insured

The sole proximate cause of which is an act or omission of any insured other than acts or omissions of any of "your designated employees".

c. Nuclear Incidents Or Conditions

Due to nuclear reaction, nuclear radiation or radioactive contamination or to any related act or condition.

d. Pollution

Due to the discharge, dispersal, seepage, migration, release or escape of "pollutants" excluded under Exclusion **f.** Pollution, Coverage A.

SUPPLEMENTARY PAYMENTS – COVERAGE A

We will pay, with respect to any claim we investigate or settle, or any "suit" against an insured we defend:

1. All expenses we incur.
2. All court costs taxed against the insured in the "suit". However, these payments do not include attorneys' fees or attorneys' expenses taxed against the insured.
3. All interest on the full amount of any judgment that accrues after entry of the judgment and before we have paid, offered to pay or deposited in court the part of the judgment that is within the applicable limit of insurance.
4. The cost of bonds to release attachments, but only for bond amounts within the applicable limit of insurance. We do not have to furnish these bonds.
5. Expenses incurred by the insured for first aid administered to others at the time of an accident, for "bodily injury" to which this insurance applies.
6. All reasonable expenses, incurred by the insured at our request to assist us in the investigation or defense of the claim or "suit", including actual loss of earnings up to $250 a day because of time off from work.
7. Prejudgment interest awarded against the insured on that part of the judgment we pay. If we make an offer to pay the applicable limit of insurance, we will not pay any prejudgment interest based on that period of time after the offer.

These payments will not reduce the limits of insurance.

SECTION II – WHO IS AN INSURED

1. You are an insured.
2. Your "executive officers" and directors are insureds, but only with respect to their duties as your officers and directors.
3. Your stockholders are insureds, but only with respect to their liability as stockholders.
4. Any railroad operating over your tracks is an insured.

SECTION III – LIMITS OF INSURANCE

1. The Limits of Insurance shown in the Declarations and the rules below fix the most we will pay regardless of the number of:
   a. Insureds;
   b. Claims made or "suits" brought; or
   c. Persons or organizations making claims or bringing "suits".
2. The Aggregate Limit is the most we will pay for the sum of all damages because of all "bodily injury", all "property damage" and all "physical damage to property".
3. Subject to Paragraph **2.** above, the Each Occurrence Limit is the most we will pay for the sum of all damages because of all "bodily injury", all "property damage" and all "physical damage to property" arising out of any one occurrence.
4. Subject to Paragraph **3.** above, the payment for "physical damage to property" shall not exceed the lesser of:
   a. The actual cash value of the property at the time of loss; or
   b. The cost to repair or replace the property with other property of like kind or quality.

The Limits of Insurance of this Coverage Part apply separately to each consecutive annual period and to any remaining period of less than 12 months, starting with the beginning of the policy period shown in the Declarations, unless the policy period is extended after issuance for an additional period of less than 12 months. In that case, the additional period will be deemed part of the last preceding period for purposes of determining the Limits of Insurance.

SECTION IV – CONDITIONS

A. The following Conditions apply to Coverages **A** and **B:**

1. Assignment

Assignment of interest under this Coverage Part shall not bind us unless we issue an endorsement consenting to the assignment.

2. Bankruptcy

Bankruptcy or insolvency of the insured or of the insured's estate will not relieve us of our obligations under this Coverage Part.

3. Cancellation

a. You may cancel this policy by mailing or delivering to us advance written notice of cancellation.

© ISO Properties, Inc., 2006

b. We may cancel this policy by mailing or delivering to you, the "contractor" and any involved governmental authority or other contracting party designated in the Declarations, at the respective mailing addresses last known to us, written notice of cancellation at least 60 days before the effective date of cancellation.

c. Notice of cancellation will state the effective date of cancellation. The policy period will end on that date.

d. If this policy is cancelled, any unearned premium will be refunded. If we cancel, the refund will be pro rata. If you cancel, the refund may be less than pro rata. The cancellation will be effective even if we have not made or offered a refund.

e. If notice is mailed, proof of mailing will be sufficient proof of notice.

4. **Changes**

This policy contains all the agreements between you and us concerning the insurance afforded. You are authorized to make changes in the terms of this policy with our consent. This policy's terms can be amended or waived only by endorsement issued by us and made a part of this policy.

5. **Inspections And Surveys**

a. We have the right to:

(1) Make inspections and surveys at any time;

(2) Give you reports on the conditions we find; and

(3) Recommend changes.

b. We are not obligated to make inspections, surveys, reports or recommendations and any such actions we do undertake relate only to insurability and the premiums to be charged. We do not make safety inspections. We do not undertake to perform the duty of any person or organization to provide for the health or safety of workers or the public. And we do not warrant that conditions:

(1) Are safe or healthful; or

(2) Comply with laws, regulations, codes or standards.

c. Paragraphs a. and b. of this condition apply not only to us, but also to any rating, advisory, rate service or similar organization which makes insurance inspections, surveys, reports or recommendations.

d. Paragraph b. of this condition does not apply to any inspections, surveys, reports or recommendations we may make relative to certification, under state or municipal statutes, ordinances or regulations, of boilers, pressure vessels or elevators.

6. **Other Insurance**

The insurance afforded by this policy is:

a. Primary insurance and we will not seek contribution from any other insurance available to you except if the other insurance is provided by a contractor other than the designated contractor for the same operation and "job location"; and

b. If the other insurance is available, we will share with that other insurance by the method described below.

If all of the other insurance permits contribution by equal shares, we will follow this method also. Under this approach, each insurer contributes equal amounts until it has paid its applicable limit of insurance or none of the loss remains, whichever comes first.

If any of the other insurance does not permit contribution by equal shares, we will contribute by limits. Under this method, each insurer's share is based on the ratio of its applicable limit of insurance to the total applicable limits of insurance of all insurers.

7. **Premium And Premium Audit**

a. We will compute all premiums for this Coverage Part in accordance with our rules and rates.

b. Contract cost, the premium base shown in the Declarations, means the total cost of the operations described in the Declarations.

c. The premium shown in the Declarations as advance premium is a deposit premium only. At the close of each audit period we will compute the earned premium for that period and send notice to the "contractor" designated in the Declarations. The due date for audit and retrospective premiums is the date shown as the due date on the bill. If the sum of the advance and audit premiums paid for the policy period is greater than the earned premium, we will return the excess to the contractor designated in the Declarations.

In no event shall the payment of premium be your obligation.

© ISO Properties, Inc., 2006

8. **Transfer Of Rights Of Recovery Against Others To Us**

If the insured has rights to recover all or part of any payment we have made under this policy, those rights are transferred to us. The insured must do nothing after loss to impair them. At our request, the insured will bring "suit" or transfer those rights to us and help us enforce them.

9. **When We Do Not Renew**

If we decide not to renew this Coverage Part, we will mail or deliver to the first Named Insured shown in the Declarations written notice of the nonrenewal not less than 30 days before the expiration date.

If notice is mailed, proof of mailing will be sufficient proof of notice.

B. The following Conditions apply to Coverage A only:

1. **Legal Action Against Us**

No person or organization has a right under this policy:

a. To join us as a party or otherwise bring us into a "suit" asking for damages from an insured; or

b. To sue us on this policy unless all of its terms have been fully complied with.

A person or organization may sue us to recover on an agreed settlement or on a final judgment against an insured; but we will not be liable for damages that are not payable under the terms of this policy or that are in excess of the applicable limit of insurance. An agreed settlement means a settlement and release of liability signed by us, the insured and the claimant or the claimant's legal representative.

2. **Duties In The Event Of Occurrence, Claim Or Suit**

a. You must see to it that we are notified as soon as practicable of an occurrence which may result in a claim. To the extent possible, notice should include:

(1) How, when and where the occurrence took place;

(2) The names and addresses of any injured persons and witnesses; and

(3) The nature and location of any injury or damage arising out of the occurrence.

b. If a claim is made or "suit" is brought against any insured, you must:

(1) Immediately record the specifics of the claim or "suit" and the date received; and

(2) Notify us as soon as practicable.

You must see to it that we receive written notice of the claim or "suit" as soon as practicable.

c. You and any other involved insured must:

(1) Immediately send us copies of any demands, notices, summonses or legal papers received in connection with the claim or "suit";

(2) Authorize us to obtain records and other information;

(3) Cooperate with us in the investigation or settlement of the claim or defense against the "suit"; and

(4) Assist us, upon our request, in the enforcement of any right against any person or organization which may be liable to the insured because of injury or damage to which this insurance may also apply.

d. No insured will, except at that insured's own cost, voluntarily make a payment, assume any obligation, or incur any expense, other than for first aid, without our consent.

3. **Separation Of Insureds**

Except with respect to the Limits of Insurance this insurance applies:

a. As if each Named Insured were the only Named Insured; and

b. Separately to each insured against whom claim is made or "suit" is brought.

C. The following Conditions apply to Coverage B only:

1. **Appraisal**

If you fail to agree with us on the value of the property, or the amount of loss, either you or we may make written demand for an appraisal of the loss within sixty (60) days after proof of loss is filed. In this event, each party will select a competent appraiser. The two appraisers will select a competent and impartial umpire. The appraisers will state separately the value of the property and the amount of loss. If they fail to agree, they will submit their differences to the umpire. A decision agreed to by any two will be binding. Each party will:

a. Pay its chosen appraiser; and

b. Bear the other expenses of the appraisal and umpire equally.

If we submit to an appraisal, we still retain our right to deny the claim.

2. **No Benefit To Bailee**

No person or organization, other than you, having custody of the property will benefit from this insurance.

© ISO Properties, Inc., 2006

3. **Insured's Duties In The Event Of A Loss**

   You must:

   a. Protect the property, whether or not the loss is covered by this policy. Any further loss due to your failure to protect the property shall not be recoverable under this policy. Reasonable expenses incurred in affording such protection shall be deemed to be incurred at our request; and

   b. Submit to us, as soon after the loss as possible, your sworn proof of loss containing the information we request to settle the loss and, at our request, make available the damaged property for examination.

4. **Legal Action Against Us**

   No person or organization has a right under this policy to sue us on this policy unless all of its terms have been fully complied with and until 30 days after proof of loss is filed and the amount of loss is determined as provided in this policy.

5. **Payment Of Loss**

   We may pay for the loss in money, but there can be no abandonment of any property to us.

SECTION V – DEFINITIONS

1. "Bodily injury" means bodily injury, sickness or disease sustained by a person, including death resulting from any of these at any time.
2. "Contractor" means the contractor designated in the Declarations and includes all subcontractors working directly or indirectly for that "contractor" but does not include you.
3. "Covered contract" means any contract or agreement to carry a person or property for a charge or any interchange contract or agreement respecting motive power, or rolling stock equipment.
4. "Executive officer" means a person holding any of the officer positions created by your charter, constitution, by-laws or any other similar governing document.
5. "Hostile fire" means one which becomes uncontrollable or breaks out from where it was intended to be.
6. "Job location" means the job location designated in the Declarations including any area directly related to the "work" designated in the Declarations. "Job location" includes the ways next to it.
7. "Physical damage to property" means direct and accidental loss of or damage to rolling stock and their contents, mechanical construction equipment or motive power equipment, railroad tracks, roadbeds, catenaries, signals, bridges or buildings.
8. "Pollutants" means any solid, liquid, gaseous or thermal irritant or contaminant, including smoke, vapor, soot, fumes, acids, alkalis, chemicals and waste. Waste includes material to be recycled, reconditioned or reclaimed.
9. "Property damage" means:
   a. Physical injury to tangible property, including all resulting loss of use of that property. All such loss of use shall be deemed to occur at the time of the physical injury that caused it; or
   b. Loss of use of tangible property that is not physically injured. All such loss of use shall be deemed to occur at the time of the occurrence that caused it.
10. "Suit" means a civil proceeding in which damages because of "bodily injury" or "property damage" to which this insurance applies are alleged. "Suit" includes:
    a. An arbitration proceeding in which such damages are claimed and to which the insured must submit or does submit with our consent; or
    b. Any other alternative dispute resolution proceeding in which such damages are claimed and to which the insured submits with our consent.
11. "Work" means work or operations performed by the "contractor" including materials, parts or equipment furnished in connection with the work or operations.
12. "Your designated employee" means:
    a. Any supervisory employee of yours at the "job location";
    b. Any employee of yours while operating, attached to or engaged on work trains or other railroad equipment at the "job location" which are assigned exclusively to the "contractor"; or
    c. Any employee of yours not described in Paragraph **a.** or **b.** above who is specifically loaned or assigned to the work of the "contractor" for the prevention of accidents or protection of property.

© ISO Properties, Inc., 2006

THIS ENDORSMENT CHANGES THE POLICY. PLEASE READ IT CAREFULLLY

ASBESTOS EXCLUSION ENDORSEMENT

It is hereby understood and agreed that the following exclusion is added to Coverage A – **Bodily Injury and Property Damage Liability** and Coverage B – **Physical Damage to Property** of Section 1 – Coverage under paragraph 2.

Exclusions:

This insurance does not apply to any obligation of the Company:

A. to investigate, settle or defend any claim or suit against any "insured" alleging actual or threatened injury or damage of any nature or kind including loss of use to persons or property which arises out of or would not have occurred but for:

   (1) exposure to asbestos; or
   (2) manifestation of any disease relating to the exposure to asbestos;
   during policy period or at any time prior to the policy period;

B. to pay, contribute or indemnify another for any injury or damage resulting in judgments, settlements, loss, costs or expenses awarded or incurred that:

   (1) arises out of any such claim or suit; or
   (2) arises due to compliance with any action authorized by law relating to such injury or damage.

All other terms and conditions remain unchanged

 Contains copyrighted material of the Insurance Services Office, Inc. with its permission. Copyright, 2007

THIS ENDORSMENT CHANGES THE POLICY. PLEASE READ IT CAREFULLLY

DISCLOSURE – TERRORISM RISK INSURANCE ACT

THIS ENDORSEMENT IS MADE PART OF YOUR POLICY PURSUANT TO THE TERRORISM RISK INSURANCE ACT.

In accordance with the Terrorism Risk Insurance Act, including all amendments, ("TRIA" or the "Act"), we are required to provide you with a notice of the portion of your premium attributable to coverage for "certified acts of terrorism," the federal share of payment of losses from such acts, and the limitation or "cap" on our liability under the Act

Disclosure of Premium

The Company has made available coverage for "certified acts of terrorism" as defined in the Act, for **ZERO** additional premium.

Federal Participation In Payment of Terrorism Losses

If an individual insurer's losses exceed a deductible amount specified in the Act, the federal government will reimburse the insurer for 85% of losses paid in excess of the deductible, provided that aggregate industry losses from a "certified act of terrorism" exceed $100 million.

Cap on Insurer Participation In Payment Of Terrorism Losses

If aggregate insured losses attributable to "certified acts of terrorism" exceed $100 billion in a calendar year and we have met our deductible under the Act, we shall not be liable for the payment of any portion of the amount of such losses that exceeds $100 billion. Nor shall Treasury make any payment for any portion of the amount of such losses that exceeds $100 billion. In such case, insured losses up to that amount are subject to pro rata allocation in accordance with procedures established by the Secretary of the Treasury.

Contains copyrighted material of the Insurance Services Office, Inc. with its permission. Copyright, 2007

THIS ENDORSEMENT CHANGES THE POLICY. PLEASE READ IT CAREFULLY.

CAP ON LOSSES FROM CERTIFIED ACTS OF TERRORISM

This endorsement modifies insurance provided under the following:

RAILROAD PROTECTIVE LIABILITY COVERAGE PART

If aggregate insured losses attributable to terrorist acts certified under the federal Terrorism Risk Insurance Act exceed $100 billion in a Program Year (January 1 through December 31) and we have met our insurer deductible under the Terrorism Risk Insurance Act, we shall not be liable for the payment of any portion of the amount of such losses that exceeds $100 billion, and in such case insured losses up to that amount are subject to pro rata allocation in accordance with procedures established by the Secretary of the Treasury.

"Certified act of terrorism" means an act that is certified by the Secretary of the Treasury, in concurrence with the Secretary of State and the Attorney General of the United States, to be an act of terrorism pursuant to the federal Terrorism Risk Insurance Act. The criteria contained in the Terrorism Risk Insurance Act for a "certified act of terrorism" include the following:

1. The act resulted in insured losses in excess of $5 million in the aggregate, attributable to all types of insurance subject to the Terrorism Risk Insurance Act; and
2. The act is a violent act or an act that is dangerous to human life, property or infrastructure and is committed by an individual or individuals as part of an effort to coerce the civilian population of the United States or to influence the policy or affect the conduct of the United States Government by coercion.

© ISO Properties, Inc., 2007

THIS ENDORSEMENT CHANGES THE POLICY. PLEASE READ IT CAREFULLY.

NUCLEAR ENERGY LIABILITY EXCLUSION ENDORSEMENT

(Broad Form)

This endorsement modifies insurance provided under the following:

COMMERCIAL AUTOMOBILE COVERAGE PART
COMMERCIAL GENERAL LIABILITY COVERAGE PART
FARM COVERAGE PART
LIQUOR LIABILITY COVERAGE PART
MEDICAL PROFESSIONAL LIABILITY COVERAGE PART
OWNERS AND CONTRACTORS PROTECTIVE LIABILITY COVERAGE PART
POLLUTION LIABILITY COVERAGE PART
PRODUCTS/COMPLETED OPERATIONS LIABILITY COVERAGE PART
RAILROAD PROTECTIVE LIABILITY COVERAGE PART
UNDERGROUND STORAGE TANK POLICY

1. The insurance does not apply:

   A. Under any Liability Coverage, to "bodily injury" or "property damage":

      (1) With respect to which an "insured" under the policy is also an insured under a nuclear energy liability policy issued by Nuclear Energy Liability Insurance Association, Mutual Atomic Energy Liability Underwriters, Nuclear Insurance Association of Canada or any of their successors, or would be an insured under any such policy but for its termination upon exhaustion of its limit of liability; or

      (2) Resulting from the "hazardous properties" of "nuclear material" and with respect to which (a) any person or organization is required to maintain financial protection pursuant to the Atomic Energy Act of 1954, or any law amendatory thereof, or (b) the "insured" is, or had this policy not been issued would be, entitled to indemnity from the United States of America, or any agency thereof, under any agreement entered into by the United States of America, or any agency thereof, with any person or organization.

   B. Under any Medical Payments coverage, to expenses incurred with respect to "bodily injury" resulting from the "hazardous properties" of "nuclear material" and arising out of the operation of a "nuclear facility" by any person or organization.

   C. Under any Liability Coverage, to "bodily injury" or "property damage" resulting from "hazardous properties" of "nuclear material", if:

      (1) The "nuclear material" (a) is at any "nuclear facility" owned by, or operated by or on behalf of, an "insured" or (b) has been discharged or dispersed therefrom;

      (2) The "nuclear material" is contained in "spent fuel" or "waste" at any time possessed, handled, used, processed, stored, transported or disposed of, by or on behalf of an "insured"; or

      (3) The "bodily injury" or "property damage" arises out of the furnishing by an "insured" of services, materials, parts or equipment in connection with the planning, construction, maintenance, operation or use of any "nuclear facility", but if such facility is located within the United States of America, its territories or possessions or Canada, this exclusion (3) applies only to "property damage" to such "nuclear facility" and any property thereat.

2. As used in this endorsement:

   "Hazardous properties" includes radioactive, toxic or explosive properties.

   "Nuclear material" means "source material", "special nuclear material" or "by-product material".

© ISO Properties, Inc., 2007

"Source material", "special nuclear material", and "by-product material" have the meanings given them in the Atomic Energy Act of 1954 or in any law amendatory thereof.

"Spent fuel" means any fuel element or fuel component, solid or liquid, which has been used or exposed to radiation in a "nuclear reactor".

"Waste" means any waste material **(a)** containing "by-product material" other than the tailings or wastes produced by the extraction or concentration of uranium or thorium from any ore processed primarily for its "source material" content, and **(b)** resulting from the operation by any person or organization of any "nuclear facility" included under the first two paragraphs of the definition of "nuclear facility".

"Nuclear facility" means:

(a) Any "nuclear reactor";

(b) Any equipment or device designed or used for **(1)** separating the isotopes of uranium or plutonium, **(2)** processing or utilizing "spent fuel", or **(3)** handling, processing or packaging "waste";

(c) Any equipment or device used for the processing, fabricating or alloying of "special nuclear material" if at any time the total amount of such material in the custody of the "insured" at the premises where such equipment or device is located consists of or contains more than 25 grams of plutonium or uranium 233 or any combination thereof, or more than 250 grams of uranium 235;

(d) Any structure, basin, excavation, premises or place prepared or used for the storage or disposal of "waste";

and includes the site on which any of the foregoing is located, all operations conducted on such site and all premises used for such operations.

"Nuclear reactor" means any apparatus designed or used to sustain nuclear fission in a self-supporting chain reaction or to contain a critical mass of fissionable material.

"Property damage" includes all forms of radioactive contamination of property.

© ISO Properties, Inc., 2007

THIS ENDORSEMENT CHANGES THE POLICY. PLEASE READ IT CAREFULLY.

ILLINOIS CHANGES – CANCELLATION AND NONRENEWAL

This endorsement modifies insurance provided under the following:

RAILROAD PROTECTIVE LIABILITY COVERAGE PART

A. **Cancellation** (Section IV 3.) is replaced by the following:

1. **Cancellation**

a. You may cancel this policy by mailing to us advance written notice of cancellation.

b. We may cancel this policy by mailing written notice stating the reason for cancellation. If we cancel:

(1) For nonpayment of premium, we will mail the notice at least 10 days prior to the effective date of cancellation.

(2) For a reason other than nonpayment of premium, we will mail the notice at least 60 days prior to the effective date of cancellation.

c. If this policy has been in effect for more than 60 days, we may cancel only for one or more of the following reasons:

(1) Nonpayment of premium;

(2) The policy was obtained through a material misrepresentation;

(3) Any Insured has violated any of the terms and conditions of the policy;

(4) The risk originally accepted has measurably increased;

(5) Certification to the Director of Insurance of the loss of reinsurance by the insurer that provided coverage to us for all or a substantial part of the underlying risk insured; or

(6) A determination by the Director of Insurance that the continuation of the policy could place us in violation of the insurance laws of this state.

d. We will mail our notice to you, your agent or broker, the "contractor", and any involved government authorities or other contracting parties designated in the declarations, at the respective addresses last known to us.

e. Notice of cancellation will state the effective date of cancellation. The policy period will end on that date.

f. If this policy is cancelled, any unearned premium will be refunded. If we cancel, the refund will be pro rata. If you cancel, the refund may be less than pro rata. The cancellation will be effective even if we have not made or offered a refund.

g. If notice is mailed, proof of mailing will be sufficient proof of notice.

B. The following is added and supersedes any provision to the contrary:

NONRENEWAL

If we decide not to renew or continue this policy, we will mail you and your agent or broker, the "contractor",and any involved government authority, written notice, stating the reason for nonrenewal, at least 60 days before the end of the policy period. If we offer to renew or continue and you do not accept, this policy will terminate at the end of the current policy period. Failure to pay the required renewal or continuation premium when due shall mean that you have not accepted our offer.

If we fail to mail proper written notice of nonrenewal and you obtain other insurance, this policy will end on the effective date of that insurance.

C. **Mailing Of Notices**

We will mail cancellation and nonrenewal notices to the last addresses known to us. Proof of mailing will be sufficient proof of notice.

© ISO Properties, Inc., 2004

THIS ENDORSEMENT CHANGES THE POLICY. PLEASE READ IT CAREFULLY.

ILLINOIS CHANGES – DEFENSE COSTS

This endorsement modifies insurance provided under the following:

COMMERCIAL AUTOMOBILE COVERAGE PART
COMMERCIAL GENERAL LIABILITY COVERAGE PART
COMMERCIAL LIABILITY UMBRELLA COVERAGE PART
COMMERCIAL PROPERTY COVERAGE PART – LEGAL LIABILITY COVERAGE FORM
COMMERCIAL PROPERTY COVERAGE PART – MORTGAGEHOLDERS ERRORS AND OMISSIONS COVERAGE FORM
EMPLOYMENT-RELATED PRACTICES LIABILITY COVERAGE PART
FARM COVERAGE PART
FARM UMBRELLA LIABILITY POLICY
LIQUOR LIABILITY COVERAGE PART
MEDICAL PROFESSIONAL LIABILITY COVERAGE PART
OWNERS AND CONTRACTORS PROTECTIVE LIABILITY COVERAGE PART
POLLUTION LIABILITY COVERAGE PART
PRODUCTS/COMPLETED OPERATIONS LIABILITY COVERAGE PART
PRODUCT WITHDRAWAL COVERAGE PART
RAILROAD PROTECTIVE LIABILITY COVERAGE PART
UNDERGROUND STORAGE TANK COVERAGE PART

A. The provisions of Paragraph B. are added to all Insuring Agreements that set forth a duty to defend under:

1. Section I of the Commercial General Liability, Commercial Liability Umbrella, Employment-Related Practices Liability, Farm, Liquor Liability, Owners And Contractors Protective Liability, Pollution Liability, Products/Completed Operations Liability, Product Withdrawal, Medical Professional Liability, Railroad Protective Liability, Underground Storage Tank Coverage Parts and the Farm Umbrella Liability Policy;
2. Section II – Liability Coverage in Paragraph A. Coverage under the Business Auto, Garage, Motor Carrier and Truckers Coverage Forms;
3. Section A. Coverage under the Legal Liability Coverage Form; and
4. Coverage C – Mortgageholder's Liability under the Mortgageholders Errors And Omissions Coverage Form.

B. If we initially defend an insured ("insured") or pay for an insured's ("insured's") defense but later determine that the claim(s) is (are) not covered under this insurance, we will have the right to reimbursement for the defense costs we have incurred.

The right to reimbursement for the defense costs under this provision will only apply to defense costs we have incurred after we notify you in writing that there may not be coverage, and that we are reserving our rights to terminate the defense and seek reimbursement for defense costs.

© ISO Properties, Inc., 2007

THIS ENDORSEMENT CHANGES THE POLICY. PLEASE READ IT CAREFULLY.

Endorsement No.	001
This endorsement, effective	05/16/2014
Forms a part of policy certificate number	RRP3619201261
Issued to	Northeast Illinois Regional Commuter Corporation Railroad d/b/a Metra
By Hudson Insurance Company	

GENERAL PURPOSE ENDORSEMENT

This endorsement modifies insurance provided under the above policy certificate as follows:

The named insured is amended to read as follows: Northeast Illinois Regional Commuter Corporation DBA Metra. The Commuter Rail Division of the Regional Transportation Authority, a division of an Illinois municipal corporation and its affiliated separate public corporation known as the Northeast Illinois Regional Commuter Railroad Corporation, both operating under the service mark Metra as now exists or may hereafter be constituted or acquired, and The Regional Transportation Authority, an Illinois municipal corporation and other railroads operating on the property.

ALL OTHER TERMS OF THIS POLICY CERTIFICATE SHALL REMAIN THE SAME.

Contractor: D. Construction, Inc.

THIS ENDORSEMENT CHANGES THE POLICY. PLEASE READ IT CAREFULLY.

Endorsement No.	001
This endorsement, effective	05/16/2014
Forms a part of policy certificate number	RRP3619201261
Issued to	Northeast Illinois Regional Commuter Corporation Railroad d/b/a Metra
By Hudson Insurance Company	

GENERAL PURPOSE ENDORSEMENT

This endorsement modifies insurance provided under the above policy certificate as follows:

The named insured is amended to read as follows: Northeast Illinois Regional Commuter Corporation DBA Metra. The Commuter Rail Division of the Regional Transportation Authority, a division of an Illinois municipal corporation and its affiliated separate public corporation known as the Northeast Illinois Regional Commuter Railroad Corporation, both operating under the service mark Metra as now exists or may hereafter be constituted or acquired, and The Regional Transportation Authority, an Illinois municipal corporation and other railroads operating on the property.

ALL OTHER TERMS OF THIS POLICY CERTIFICATE SHALL REMAIN THE SAME.

Contractor: D. Construction, Inc.

POLICY NUMBER: TB2-641-440232

COMMERCIAL GENERAL LIABILITY
CG 20 10 07 04

THIS ENDORSEMENT CHANGES THE POLICY. PLEASE READ IT CAREFULLY.

ADDITIONAL INSURED – OWNERS, LESSEES OR CONTRACTORS – SCHEDULED PERSON OR ORGANIZATION

This endorsement modifies insurance provided under the following:

COMMERCIAL GENERAL LIABILITY COVERAGE PART

A. Section II – Who Is An Insured is amended to include as an additional insured the person(s) or organization(s) shown in the Schedule, but only with respect to liability for "bodily injury", "property damage" or "personal and advertising injury" caused, in whole or in part, by:
   1. Your acts or omissions; or
   2. The acts or omissions of those acting on your behalf;

   in the performance of your ongoing operations for the additional insured(s) at the location(s) designated below.

B. With respect to the insurance afforded to these additional insureds, the following additional exclusions apply:
   This insurance does not apply to "bodily injury" or "property damage" occurring after:
   1. All work, including materials, parts or equipment furnished in connection with such work, on the project (other than service, maintenance or repairs) to be performed by or on behalf of the additional insured(s) at the location of the covered operations has been completed; or
   2. That portion of "your work" out of which the injury or damage arises has been put to its intended use by any person or organization other than another contractor or subcontractor engaged in performing operations for a principal as a part of the same project.

SCHEDULE

Name Of Additional Insured Person(s) Or Organization(s):	Location(s) Of Covered Operations
Per master schedule kept on record at broker: Columbian Agency, 1005 Laraway Road, New Lenox, IL 60451-4102	Per master schedule kept on record at broker: Columbian Agency, 1005 Laraway Road, New Lenox, IL 60451-4102

Information required to complete this Schedule, if not shown above, will be shown in the Declarations.

© ISO Properties, Inc., 2004

POLICY NUMBER: TB2-641-440232

COMMERCIAL GENERAL LIABILITY
CG 20 37 07 04

THIS ENDORSEMENT CHANGES THE POLICY. PLEASE READ IT CAREFULLY.

ADDITIONAL INSURED – OWNERS, LESSEES OR CONTRACTORS – COMPLETED OPERATIONS

This endorsement modifies insurance provided under the following:

COMMERCIAL GENERAL LIABILITY COVERAGE PART

Section II – Who Is An Insured is amended to include as an additional insured the person(s) or organization(s) shown in the Schedule, but only with respect to liability for "bodily injury" or "property damage" caused, in whole or in part, by "your work" at the location designated and described in the schedule of this endorsement performed for that additional insured and included in the "products-completed operations hazard".

SCHEDULE

Name Of Additional Insured Person(s) Or Organization(s):	Location And Description Of Completed Operations
Per master schedule kept on record at broker: Columbian Agency, 1005 Laraway Road, , New Lenox, IL 60451-4102	Per master schedule kept on record at broker: Columbian Agency, 1005 Laraway Road , New Lenox, IL 60451-4102

Information required to complete this Schedule, if not shown above, will be shown in the Declarations.

© ISO Properties, Inc., 2004